WEG Motor
Catalog

2014

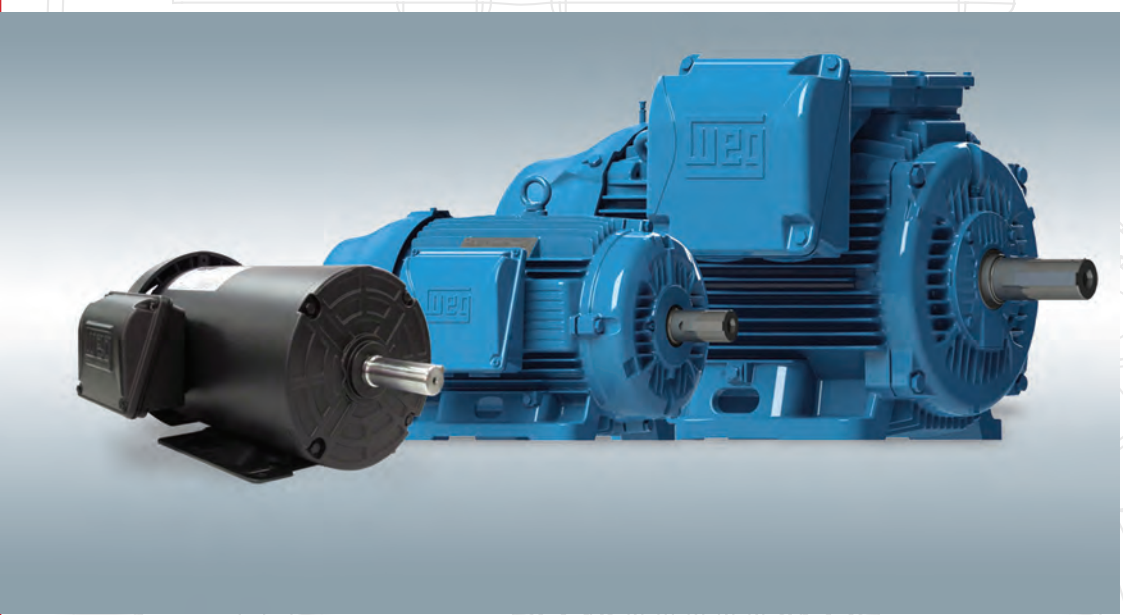

Table of Contents

Single-Phase General Purpose Motors

TEFC – Foot Mount A-9
TEFC – C-Face – Foot Mount A-11
TEFC – C-Face – Footless A-11
TEFC – Foot Mount – Thermally Protected A-12
ODP – Foot Mount A-13
ODP – Resilient Base A-14
ODP – C-Face – Foot Mount A-15
ODP – C-Face – Footless A-15
ODP – Foot Mount – Thermally protected A-16

Three-Phase General Purpose Motors

TEFC – Foot Mount A-21
TEFC – C-Flange – Foot Mount A-33
TEFC – C-Flange – Footless A-37
ODP – Foot Mount A-44
ODP – C-Face – Foot Mount A-51

IEEE 841 - Three-Phase

TEFC – Foot Mount – NEMA Premium A-56
TEFC – C-Flange – Foot Mount – NEMA Premium A-61
TEFC – C-Flange – Footless – NEMA Premium A-63

BRAKE MOTORS – Three-Phase

TEFC – Foot Mount A-65
TEFC – C-Face – Foot Mount A-66

IEC TRU-METRIC™ - Three-Phase

TEFC – Foot Mount A-69

Super Premium Efficiency Motors

GENERAL PURPOSE - Three-Phase

TEFC – Foot Mount – Super Premium A-75

Severe Duty – Three-Phase Motors

GENERAL PURPOSE

TEFC – Foot Mount A-80
TEFC – C-Flange – Foot Mount A-89
TEFC – C-Flange – Footless A-92

IEEE 841

TEFC – Foot Mount A-95
TEFC – C-Flange – Foot Mount A-100
TEFC – C-Flange – Footless A-102

CRUSHER DUTY

TEFC – Foot Mount A-106

VECTOR DUTY

TENV – Foot Mount – Double C-Face A-108

IEC TRU-METRIC™

TEFC – Foot Mount IE3 & IE2 . . . . . A-110

Continued on next page

Data subject to change without notice.

Explosion Proof Motors

SINGLE-PHASE

Foot Mount A-114
C-Flange – Foot Mount A-115

THREE-PHASE

Foot Mount A-118
C-Flange – Foot Mount A-124
C-Flange – Footless A-126
ATEX Foot Mount A-129

Wash Down Duty – Shark™ – Stainless Steel

TEFC – C-Face Foot Mount – NEMA Premium A-132
TEFC – C-Face Foot Mount – High Efficiency A-133
TEFC – C-Face Footless – High Efficiency A-134

Fractional Motors

SINGLE-PHASE

TEFC – Foot Mount A-138
TEFC – C-Face – Foot Mount A-139
TEFC – C-Face – Footless A-139
TEFC – Foot Mount – Thermally Protected A-140
ODP – Foot Mount A-141
ODP – Resilient Base A-143
ODP – C-Face – Foot Mount A-144
ODP – C-Face – Footless A-145
ODP – Foot Mount – Thermally Protected A-146

THREE-PHASE

TEFC – Foot Mount A-147
TEFC – C-Face – Foot Mount A-149
TEFC – C-Face – Footless A-151
ODP – Resilient Base A-153
ODP – Foot Mount A-154
ODP – C-Face – Foot Mount A-156
ODP – C-Face – Footless A-157

EXPLOSION PROOF - SINGLE-PHASE

Foot Mount A-159
C-Flange – Foot Mount A-160

EXPLOSION PROOF - THREE-PHASE

Foot Mount A-161
C-Flange – Foot Mount A-162

Continued on next page

Table of Contents

Air Handling Motors

COMMERCIAL HVAC MOTORS

TEFC – Single-Phase – Foot Mount A-164
TEAO – Single-Phase – Resilient Base A-165
TEAO – Single-Phase – Foot Mount A-165
ODP – Single-Phase – Foot Mount A-166
ODP – Single-Phase – Resilient Base A-167
ODP – Three-Phase – Resilient Base A-168
ODP – Single-Phase – Evaporative Cooler A-169

HVAC MOTORS - WITH INTERNAL AEGIS® SGR

TEFC – Three-Phase – Foot Mount A-170
ODP – Three-Phase – Foot Mount A-171

COOLING TOWER MOTORS – THREE-PHASE

TEFC – Three-Phase – Foot Mount – NEMA Premium A-173
TEAO – Three-Phase – Foot Mount – NEMA Premium A-176
TEFC – Three-Phase – Double Speed (1 & 2 Windings) – High Efficiency A-178

PAD MOUNT MOTORS – Three-Phase

TEAO – NEMA Premium A-183
TEAO – High Efficiency A-184

Pump Motors

JET PUMP SINGLE-PHASE (56C/56J FRAMES)

TEFC – Foot Mount A-187
TEFC – Footless A-187
ODP – Foot Mount A-188
ODP – Footless A-189

JET PUMP THREE-PHASE (56C/56J FRAMES)

TEFC – Foot Mount A-190
TEFC – Footless A-191
ODP – Foot Mount A-192
ODP – Footless A-193

POOL & SPA SINGLE-PHASE MOTORS

ODP – C-Face – Start Capacitor – High Service Factor A-195
ODP – Square Flange – Start Capacitor – High Service Factor A-195
ODP – C-Face – Start Capacitor – Low Service Factor A-196
ODP – Square Flange – Start Capacitor – Low Service Factor A-196

Continued on next page

Data subject to change without notice.

SECTION A

Pump Motors, continued

CLOSE-COUPLED PUMP TEFC MOTORS

JM – TEFC – Single-Phase A-198
JP – TEFC – Single-Phase A-198
JM – TEFC – Three-Phase A-199
JP – TEFC – Three-Phase A-205

CLOSE-COUPLED PUMP ODP MOTORS

JM – ODP – Three-Phase A-210
JM – ODP – Three-Phase – Footless Vertical A-217
JP – ODP – Three-Phase A-219
JP – ODP – Three-Phase – Footless Vertical A-225

CLOSE-COUPLED PUMP TEFC MOTORS - WITH INTERNAL AEGIS® SGR

JM – TEFC – Three-Phase A-227
JP – TEFC – Three-Phase A-228

CLOSE-COUPLED PUMP ODP MOTORS - WITH INTERNAL AEGIS® SGR

JM – ODP – Three-Phase A-229
JP – ODP – Three-Phase A-230

FIRE PUMP MOTORS

ODP – Three-Phase – High Efficiency A-232
TEFC (50Hz) – Three-Phase – IE2 . . . . . A-235

P-BASE MOTORS

TEFC – Three-Phase – High Efficiency A-237

IEC Tru-Metric™ Motors

SAFE AREA

TEFC – Foot Mount A-240

ATEX MOTORS

TEFC – Ex nA A-247
TEFC – Ex d – IE2 . . . . . A-253

Farm Duty Motors

TEFC – Single-Phase – General Purpose – Foot Mount A-256
TEFC – Single-Phase – Auger Drive – Footless A-257
TEAO – Single-Phase – Poultry Fan – Foot Mount A-258
TEAO – Single-Phase – Poultry Fan – Resilient Base A-259

Continued on next page

Table of Contents

Definite Purpose Motors

VECTOR DUTY MOTORS

TENV – Three-Phase – Foot Mount – Double C-Face A-260

OIL WELL PUMPING – ODP & TEFC

TEFC – Three-Phase – NEMA Design 'D' A-263

ODP - Three-Phase - NEMA Design 'D' A-264

COMPRESSOR DUTY MOTORS

ODP – Single-Phase – Foot Mount A-266

ODP – Three-Phase – Foot Mount – NEMA Premium A-267

HYDRAULIC PUMP MOTORS

TEFC – Three-Phase – SAE-A – High Efficiency A-268

BRAKE MOTORS

TEFC – Foot Mount A-270

TEFC – C-Face – Foot Mount A-271

SAW ARBOR MOTORS

TEFC – Three-Phase – Right-Hand Thread A-273

TEFC – Three-Phase – Left-Hand Thread A-274

SOOT BLOWER MOTORS

TEFC – C-Face – Footless A-275

Medium Voltage Motors

W22 Severe Duty Motors – TEFC

W22 Medium Voltage Motors – TEFC 2300 – 4160V A-278

W22 Medium Voltage Motors – TEFC 6000 – 6600V A-279

W22 Medium Voltage 2300 – 4160V Electrical Data A-280

W22 Medium Voltage 6000 – 6600V Electrical Data A-281

Standard Dimensions A-282

Components Design A-284

Continued on next page

Data subject to change without notice.

Table of Contents

SECTION A

Add-On™ Modifications



WEG In-House Modification Pricing (Includes Parts and Labor) A-286



Factory Built Modifications (List Price Adders) A-290



Parts A-294

Parts & Modifications

Section B – Electrical Data . . . . . .(following page A-311)

Section C – Mechanical Data . . . . . (following page B-93)

Electrical Data
Mechanical Data

W22 Severe Duty Motors – TEFC

Components Design

New Cooling System

Fan Cover
- Aerodynamic design
- Noise level reduction
- Better air flow distribution over frame
- Increased mechanical strength

Fan
- Reinforced fan hub structure
- Noise level reduction
- Increased air flow
- Fan with higher stiffness

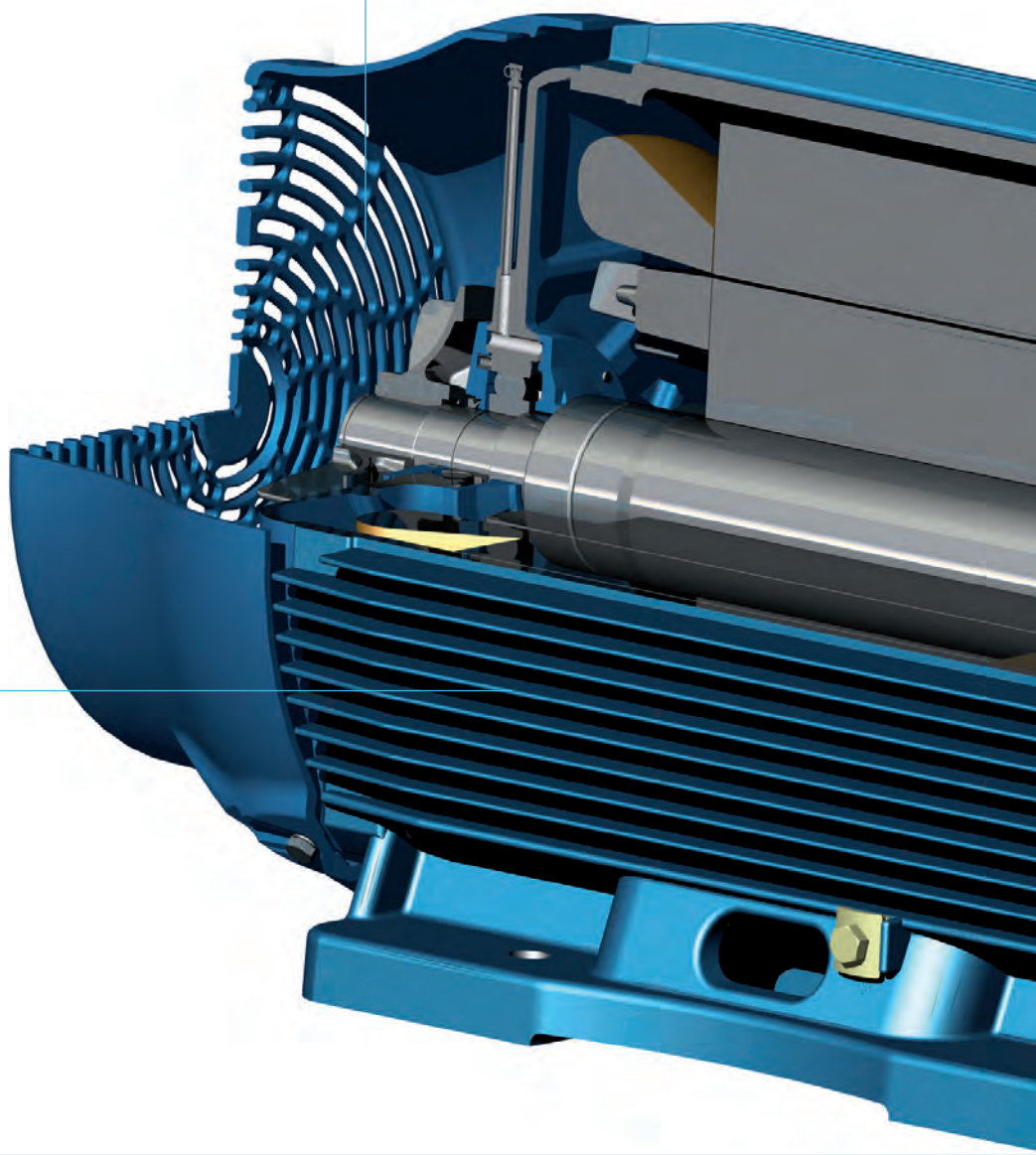

Frame
- Terminal box position outlet on top 447T and larger
- Reduced temperature on windings and bearings
- Noise level reduction

Pad for vibration sensor
- Displaced 90^0 from each other

Enhanced Lifting Provisions
- Easier handling - horizontal & vertical
- Higher mechanical strength and handling safety

Solid feet
- More impact resistance
- Ideal for high vibration level applications

Endshields Subsystem

DE (Drive Endshield)
- New fin design
- Bearing moved outwards for better load support
- Improved bearing heat dissipation for reduced bearing temperature
- Reinforced endshield structure

NDE (Non-Drive Endshield)
- New design with smooth exterior surface
- Improved air flow
- Noise level reduction
- Improved structural rigidity for low vibration

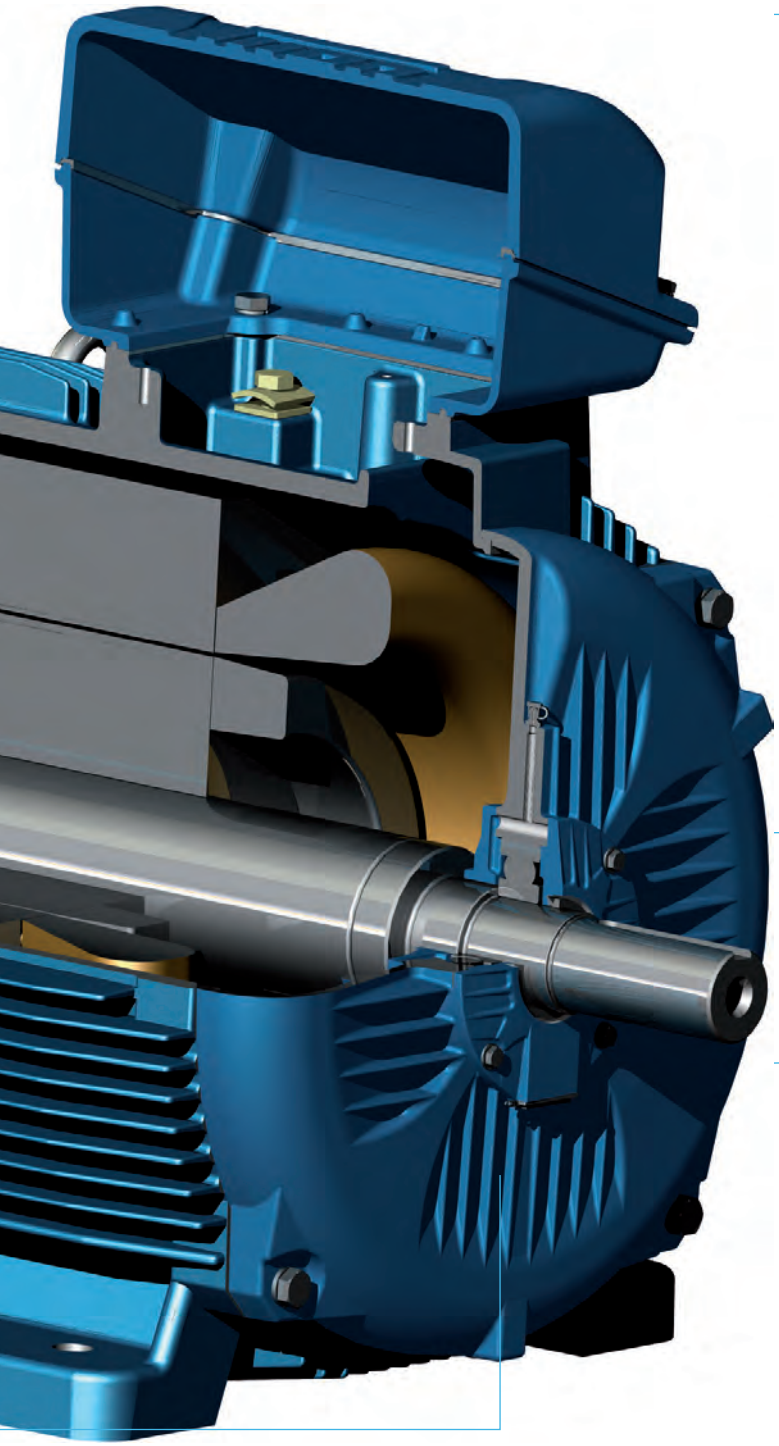

Terminal Box

- Better connection quality
- Easier cable handling during installation
- More space available for accessory installation
- Easier Maintenance
- Mounting F1/F2
- F3 Mounting optional on ≤445T
- F3 Mounting field modifiable 447T and larger
- Rotation on 90° stages

Bearing Caps

External

- Finned surface for improved bearing heat dissipation

Internal

- Change of grease path for positive lubrication
- Bearing lubrication quality improvement
- Reduced bearing temperature

Seal Subsystem

- Increased dust and moisture protection
- Increased protection to high-pressure cleaning

Warranty Policy

No -Fault Warranty

Motors with frame sizes 215T and smaller are covered under a "No-Fault" warranty. This warranty claim is offered one time, per end-user, per application. If there is more than one failure, please contact the Service Department for review. The following must be sent to the WEG Service Department to process a "No-Fault" warranty claim.

- Original nameplate from the failed motor (or, for a Shark-line motor, its terminal box cover)
- Copy of the original WEG invoice or invoice # for the failed motor
- Brief description of the failure for quality control purposes
- Please send request no later than 30 days after failure.

Warranty on Larger Motors

WEG Electric requires that motors larger than 215T frame be inspected by a WEG Authorized Service Center, or if none is available, an EASA-affiliated service shop. Depending on the inspection results, WEG will decide whether to cover the motor under warranty. Prior to a decision being made on a claim for warranty, the following are required from the service shop and customer.

- Completed EASA inspection report
- Repair Quote
- Copy of the original WEG Invoice or WEG Invoice Number
- For Frame 215T and above, photos of the failure in JPEG format suitable for e-mailing

The inclusion of photos allows WEG to properly evaluate the details of your claim, as well as to ensure that any data sent to our factory Quality Control engineers are fully understood. The warranty claim will be evaluated after receipt of the above items. Upon review of the claim, the WEG Service Department will make contact and advise how to proceed. The service shop should not remove the nameplate nor make repairs without being requested to do so by a WEG Service Department representative.

NOTE: For all Ingersoll-Rand motors, please contact the WEG Service Department prior to any inspection.

Communication

Correspondence with the WEG Service Department may be via e-mail, fax or regular mail. Please keep a photocopy of all nameplates for your records.

Limited Warranty:

WEG Electric Corp. is proud of all of our product lines. WEG and its employees are committed to our customers and users to provide the best designed and manufactured motors, drives and controls. WEG provides a limited warranty on our products against defects in materials and workmanship for a specific period from the date of purchase. If a motor's date code is within its stated warranty period (18 month, 36 month, etc.), no proof of purchase is required. Otherwise, a copy of the invoice is necessary to show the date of purchase.

Warranty Period:

- The standard warranty for WEG products is 18 months from the invoice date.
- For General Purpose TEFC and ODP Premium Efficiency motors the warranty is 36 months from the invoice date.
- For IEEE 841 motors, the warranty is 60 months from the invoice date.

Authorized Service Centers:

WEG has service centers around the world to meet the needs of our customers. Information regarding the nearest service center can be found on our web site at **www.weg.net/us** or by calling **1-800-ASK-4WEG** (1-800-275-4934). Any warranty repair by a service shop must be pre-approved by WEG.

Warranty Service:

If a WEG product requires warranty service due to defective materials or workmanship, WEG will, at its option, either repair or replace the defective product. By "replace", WEG means the original purchaser's account will be credited for the cost on the WEG invoice (less freight). If warranty is granted, and replacement is specified, the motor's nameplate must be sent to the Service Dept. Warranty is applied to products that have been, at all times, properly maintained and operated or used under normal operating conditions for which the product was designed. WEG is not responsible for any expenses incurred in installation, removal from service, transportation (freight) or consequential expenses.

Limitation of Warranty:

THE FOREGOING WARRANTIES ARE EXCLUSIVE AND IN LIEU OF ALL OTHER WARRANTIES OF QUALITY AND PERFORMANCE, WRITTEN, ORAL OR IMPLIED, AND ALL OTHER WARRANTIES INCLUDING ANY IMPLIED WARRANTIES OF MERCHANTABILITY OR FITNESS FOR A PARTICULAR PURPOSE OR ARISING FROM COURSE OF DEALING OR USAGE OF TRADE ARE HEREBY DISCLAIMED BY WEG. THE FOREGOING OBLIGATION TO REPAIR OR REPLACE WEG PRODUCTS OR PARTS SHALL BE THE SOLE AND EXCLUSIVE REMEDY OF THE PURCHASER, ITS CUSTOMERS, OR USERS OF THE PRODUCTS OR PARTS.

Proper Storage of Motors:

When motors are not immediately installed, they should be stored in their normal upright position in a dry even temperature location, free of dust, gases and corrosive atmosphere. Inactive motors tend to expel grease from between the bearing surfaces, thereby removing the protective film that impedes metal-to-metal contact. At least once per month shafts should be rotated in accordance with WEG's installation and maintenance manual. Motors stored for a period exceeding one year should have the bearings re-lubricated in accordance with the WEG motor installation and maintenance manual.

RETURN POLICY

WEG products that are purchased from our stocking warehouses must be returned within 90 days, freight to be paid by customer. Returned products must be unused, and in undamaged original packaging.
If products are ordered incorrectly by the customer and need to be returned to stock, then a 20% re-stocking charge will be applied. If an order of equal or greater amount is placed at the time of the return, then the fee will be reduced to 10%. If the returned products are deemed not to be in unused, undamaged condition, or in original packaging, then additional fees will be applied (up to and including full price of item). Returns on any modified products will not be allowed. Any products that are ordered as specials (with features that would not allow them to be stocked items) cannot be returned.

Contact WEG Service:

Toll -Free: **1-800-839-2529** E-Mail: **warranty@weg.net**

Part Number Configuration

Ordering

WEG model numbers contain up to 20 characters, distributed as follows:

XXX (HP)	XX (rpm)	XXX (Model)	X (Volts)	X X X X X (Application + Frame)	XXXX When Applicable

HP[1] - .12 - .16 - .25 - .33 - .50 - .75 - 001 - 0015 - 002 - 003 - 004 - 0045 - 005 - 007 - 010 - 015 - 020 - 025 - 030 - 040 - 050 - 075 - 100 - 125 - 150 - 200 - 250 - 300 - 400 - 450 - 500 - 600 - 650 ...

RPM - **36:** 3600rpm; **30:** 3000rpm; **18:** 1800rpm; **15:** 1500rpm; **12:** 1200rpm; **10:** 1000rpm; **09:** 900rpm; **07:** 750rpm

Model - Three Characters:

X ENCLOSURE	X EFFICIENCY	X PHASE
E - Totally Enclosed	S - Standard Efficiency	1 - 1 Phase
S - Severe Duty IEEE 841	P - High Efficiency	3 - 3 Phase
O - Open drip proof	T - NEMA Premium	
X - eXplosion proof	G - Super Premium	
A - Totally Enclosed Air Over		
N - Totally Enclosed Non Ventilated		

Volts	
A - 115V	L - 415V
B - 115 / 208 - 230V	M - 220 / 380 - 415V
C - 208 - 230V	N - 220 / 380V
D - 230V	O - 380 - 415V
E - 208 - 230 / 460V*	P - 200V
F - 230 / 460V	Q - 460V
G - 460V PWS	R - 115 / 230V
H - 575V	V - 200 / 400V
I - 220V	W - 460 // 220 - 240 / 380 - 415V
J - 380V	X - Other Voltage
K - 190 / 380V	Y - 460 // 380 - 415 / 660 - 690V

** Suitable for PWS on 254T and larger on low voltage connection.*

[1] • For IEC Metric motors, the output will be given in kW: .12 - .18 - .25 - .37 - .55 - .75 - 001 - 0015 - 002 - 003 - 004 - 0045 - 005 - 007 - 009 - 011 - 015 - 018 - 022 - 030 - 037 - 045 - 055 - 075 - 090 - 110 - 130 - 150 - 185 - 200 - 220 - 250 - 300 - 315 ...

- 0015 (1.5HP) is the rating that will have four digits for output Identification and only one for RPM.
- 0045 (4.5kW) is the rating that will have four digits for output identification and only one for RPM.

Frame

The frame number must be included as long as the number of remaining characters allows.
Example: 143T, 143TC, 405T, 405TS, 184JP.

XXXX Suffix

–W22, –W2, –W or W = W22 platform
–W22S, –W2S or –WS = Single punched feet
–W22G, –W2G or –WG = Aegis Ring Inside
–S = New Rolled Steel platform
–SG = New Rolled Steel / Aegis Ring inside

Application / Feature

For Definite Purpose lines, two pre-selected letters must be used after voltage code:

AD	-	**Auger Drive**
AL	-	**ALuminum Frame**
AX	-	**ATEX Motor**
BM	-	**Brake Motor**
CD	-	**Compressor Duty**
CT	-	**Cooling Tower**
EC	-	**Evaporative Cooler**
FD	-	**Farm Duty**
FL		**Footless for Fractionals (after frame)**
FP	-	**Fire Pump**
HP	-	**Hydraulic Pump**
IE	-	**IEEE 841 (Severe Duty IEEE 841)**
JP	-	**Jet Pump**
KD	-	**Crusher-Duty**
OL	-	**Manual OverLoad Protection**
OW	-	**Oil Well Pumping**
PF	-	**Poultry Fan**
PM	-	**Pad Mount**
R	-	**(Before the frame size): Round Body**
RB	-	**Roller Bearings (Integrals)[2]**
RB	-	**Resilient Base (Fractionals)**
RS	-	**Rolled Steel Frame**
SA	-	**Saw Arbor**
SP	-	**Split Phase**
SS	-	**Stainless Steel**
VD	-	**Vector Duty (TEBC or TENV)**

[2] Roller bearings are recommended for all belt driven applications 100HP and above.

Note: WEG accepts major purchasing, debit and credit cards. Payments using such cards are processed at time of shipment and subject to available credit at the moment of the transaction.

Single-Phase General Purpose Motors



ODP



Resilient Base



TEFC Rolled Steel



TEFC Cast Iron

TEFC & ODP

High Starting Torque makes these motors ideal for a wide range of applications.

Standard Features:

- Ball bearings
- Class B insulation (Rolled Steel frames)
- Class F insulation (Cast Iron frames)
- F1 Mounted
- V'ring Seals

Features that make a difference:

- High Starting Torque
- 182T frames and up are cast iron for severe duty
- NPT Threaded Holes in Terminal Box

ADDITIONAL TECHNICAL DATA

ELECTRICAL DATA:	TEFC p. B-59	ODP p. B-62
MECHANICAL DATA:	TEFC p. C-51	p. C-52
	ODP p. C-55	p. C-57





Single-Phase General Purpose Motors

TEFC – Foot Mount

HP	kW	RPM	NEMA Frame	Catalog Number	List Price	Mult. Symbol	Approx. Shipping Weight (lbs)	Service Factor	FL Amps @ High	FL. Eff (%)	"C" Dimension (in)	Voltage (V)	Notes
0.25	0.18	3600	B56	.2536ES1BB56	257	F1	31	1.15	2.30	50.0	11.102	115/208-230	9
		1800	B56	.2518ES1BB56	267	F1	33	1.15	2.35	57.7	11.102	115/208-230	9
0.33	0.25	3600	B56	.3336ES1BB56	267	F1	36	1.15	2.85	53.0	11.102	115/208-230	9
		1800	B56	.3318ES1BB56	283	F1	36	1.15	2.80	61.0	11.102	115/208-230	9
		1800	B56	.3318ES1RFDB56	284	R1	23	1.15	2.80	61.0	11.102	115/230	4;9
0.5	0.37	3600	B56	.5036ES1BB56	284	F1	40	1.15	3.80	58.0	11.102	115/208-230	9
		3600	B56	.5036ES1BOLB56	316	F1	40	1.15	3.80	58.0	11.102	115/208-230	4;9
		1800	B56	.5018ES1BB56	312	F1	41	1.15	3.70	66.5	11.102	115/208-230	9
		1800	B56	.5018ES1RFDB56	308	R1	25	1.15	3.70	66.5	11.102	115/230	4;9
		1200	D56	.5012ES1BD56	512	F1	41	1.15	3.60	71.0	12.283	115/208-230	9
0.75	0.55	3600	B56	.7536ES1BB56	297	F1	41	1.15	5.20	64.0	11.102	115/208-230	9
		3600	B56	.7536ES1BOLB56	329	F1	41	1.15	5.20	64.0	11.102	115/208-230	4;9
		1800	B56	.7518ES1BB56	348	F1	46	1.15	5.30	68.5	11.102	115/208-230	9
		1800	B56	.7518ES1RFDB56	357	R1	28	1.15	5.30	68.5	11.102	115/230	4;9
		1200	F56H	.7512ES1BF56	648	F1	58	1.15	5.00	71.0	13.464	115/208-230	9
1	0.75	3600	F143/5T	00136ES1B143T	553	W1	51	1.15	6.40	67.0	14.488	115/208-230	9
		3600	D56	00136ES1BD56	376	F1	46	1.15	6.40	67.0	12.283	115/208-230	9
		3600	D56	00136ES1BOLD56	408	F1	46	1.15	6.40	67.0	12.283	115/208-230	4;9
		1800	D56	00118ES1BD56	401	F1	52	1.15	7.00	70.3	12.283	115/208-230	9
		1800	F143/5T	00118ES1E143T	531	W1	42	1.15	3.50	70.3	14.488	208-230/460	9
		1800	F143/5T	00118ES1RFD143T	400	R1	42	1.15	7.00	70.3	13.839	115/230	4;9
		1800	D56	00118ES1RFDD56	394	R1	36	1.15	7.00	70.3	12.283	115/230	4;9
1.5	1.1	3600	F143/5T	00156ES1B143T	602	W1	43	1.15	8.55	70.0	14.488	115/208-230	9
		3600	D56	00156ES1BD56	432	F1	56	1.15	8.55	70.0	12.283	115/208-230	9
		3600	D56	00156ES1BOLD56	463	F1	56	1.15	8.55	70.0	12.283	115/208-230	4;9
		1800	G143/5T	00158ES1B145T	612	W1	53	1.15	8.70	76.5	14.882	115/208-230	9
		1800	F56H	00158ES1BF56	456	F1	58	1.15	8.70	76.5	13.464	115/208-230	9
		1800	G143/5T	00158ES1E145T	611	W1	53	1.15	4.35	76.5	14.882	208-230/460	9
		1800	G143/5T	00158ES1RFD145T	504	R1	50	1.15	8.70	76.5	14.233	115/230	4;9
		1800	F56H	00158ES1RFDF56H	502	R1	51	1.15	8.70	76.5	13.464	115/230	4;9
		1200	182T	00152ES1E182T	1,100	W1	91	1.15	4.90	75.0	16.050	208-230/460	
2	1.5	3600	G143/5T	00236ES1B145T	641	W1	44.6	1.15	10.0	74.0	14.882	115/208-230	9
		3600	F56H	00236ES1BF56	561	F1	65	1.15	10.0	74.0	13.464	115/208-230	9
		3600	F56H	00236ES1BOLF56	592	F1	65	1.15	10.0	74.0	13.464	115/208-230	4;9
		3600	G143/5T	00236ES1E145T	640	W1	53	1.15	5.00	74.0	14.882	208-230/460	9
		1800	G143/5T	00218ES1B145T	615	W1	56	1.15	10.5	78.1	14.882	115/208-230	9
		1800	G143/5T	00218ES1E145T	615	W1	56	1.15	5.25	78.1	14.882	208-230/460	9
		1800	G143/5T	00218ES1RFD145T	578	R1	57	1.15	10.5	78.1	14.233	115/230	4;9
		1800	W182/4T	00218ES1RFD182T	790	R1	95	1.15	10.0	81.0	17.244	115/230	4
		1800	G56H	00218ES1RFDG56H	529	R1	55	1.15	10.5	78.1	13.858	115/230	4;9
		1200	W213/5T	00212ES1E213T	1,209	W1	123	1.15	5.30	78.0	20.984	208-230/460	

Continued on next page

Refer to electrical and mechanical data sections for additional technical information. Please refer to back cover for description of "NOTES"

For detailed specifications, data sheets, drawings and performance curves visit http://catalog.wegelectric.com

Data subject to change without notice.

Single-Phase General Purpose Motors

TEFC – Foot Mount *continued*

HP	kW	RPM	NEMA Frame	Catalog Number	List Price	Mult. Symbol	Approx. Shipping Weight (lbs)	Service Factor	FL Amps @ High	FL. Eff (%)	"C" Dimension (in)	Voltage (V)	Notes
3	2.2	3600	G143/5T	00336ES1B145T	830	W1	54.9	1.15	12.0	84.0	14.882	115/208-230	9
		3600	W182T	00336ES1B182T	882	W1	98	1.15	13.6	80.0	16.050	115/208-230	
		3600	G143/5T	00336ES1E145T	829	W1	59	1.15	6.00	84.0	14.882	208-230/460	9
		3600	182T	00336ES1E182T	879	W1	96	1.15	6.80	80.0	16.050	208-230/460	
		1800	184T	00318ES1C184T	875	W1	99	1.15	13.6	77.0	17.050	208-230	
		1800	W182/4T	00318ES1DFD184T	915	R1	99	1.15	14.5	81.0	17.244	230	4
		1800	184T	00318ES1E184T	874	W1	99	1.15	6.80	77.0	17.050	208-230/460	
		1200	W213/5T	00312ES1E215T	1,327	W1	169	1.15	6.70	80.0	20.984	208-230/460	
5	3.7	3600	184T	00536ES1B184T	1,040	W1	110	1.15	21.0	83.0	17.05	115/208-230	
		3600	184T	00536ES1E184T	1,038	W1	109	1.15	10.5	83.0	17.05	208-230/460	
		1800	184T	00518ES1C184T	1,066	W1	119	1.15	21.4	79.0	17.05	208-230	
		1800	184T	00518ES1DFD184T	1,074	R1	119	1.15	21.4	79.0	17.050	230	4
		1800	W213/5T	00518ES1DFD215T	1,205	R1	133	1.15	21.4	79.0	20.984	230	4
		1800	W213/5TZ	00518ES1DFD215Z	1,205	R1	132	1.15	21.4	79.0	20.984	230	4
		1800	184T	00518ES1E184T	1,064	W1	119	1.15	10.7	79.0	17.05	208-230/460	
		1200	215T	00512ES1E215T	1,588	W1	173	1.15	11.0	80.0	19.567	208-230/460	
7.5	5.5	3600	213T	00736ES1B213T	1,552	W1	144	1.15	29.8	86.0	18.021	115/208-230	
		3600	213T	00736ES1E213T	1,548	W1	143	1.15	14.9	86.0	18.021	208-230/460	
		1800	215T	00718ES1DFD215T	1,463	R1	166	1.15	33.0	83.0	19.567	230	4
		1800	215TZ	00718ES1DFD215Z	1,463	R1	166	1.15	33.0	83.0	19.567	230	4
		1800	215T	00718ES1E215T	1,359	W1	163	1.15	17.0	83.0	19.567	208-230/460	
10	7.5	3600	215T	01036ES1E215T	1,916	W1	159	1.15	19.4	86.0	19.567	208-230/460	
		1800	215T	01018ES1DFD215T	1,692	R1	187	1.15	40.0	83.0	19.567	230	4
		1800	215T	01018ES1E215T	1,579	W1	186	1.15	19.5	84.0	19.567	208-230/460	
12.5	9.2	3600	215T	01236ES1C215T	2,015	W1	198	1.15	53.6	88.5	19.567	208-230	9
		1800	215T	01218ES1E215T	1,776	W1	197	1.15	24.0	84.0	19.567	208-230/460	

Refer to electrical and mechanical data sections for additional technical information. Please refer to back cover for description of "NOTES"

For detailed specifications, data sheets, drawings and performance curves visit http://catalog.wegelectric.com

Data subject to change without notice.



TEFC – C-Face – Foot Mount

HP	kW	RPM	NEMA Frame	Catalog Number	List Price	Mult. Symbol	Approx. Shipping Weight (lbs)	Service Factor	FL Amps @ High	FL. Eff (%)	"C" Dimension (in)	Voltage (V)	Notes
0.25	0.18	3600	B56C	.2536ES1BB56C	280	F1	31	1.15	2.30	50.0	11.102	115/208-230	9
		1800	B56C	.2518ES1BB56C	288	F1	33	1.15	2.35	57.7	11.102	115/208-230	9
0.33	0.25	3600	B56C	.3336ES1BB56C	288	F1	36	1.15	2.85	53.0	11.102	115/208-230	9
		1800	B56C	.3318ES1BB56C	304	F1	36	1.15	2.80	61.0	11.102	115/208-230	9
0.5	0.37	3600	B56	.5036ES1BB56C	313	F1	40	1.15	3.80	58.0	11.102	115/208-230	9
		1800	B56C	.5018ES1BB56C	333	F1	41	1.15	3.70	66.5	11.102	115/208-230	9
		1200	D56C	.5012ES1BD56C	535	F1	41	1.15	3.60	71.0	12.283	115/208-230	9
0.75	0.55	3600	B56	.7536ES1BB56C	353	F1	41	1.15	5.20	64.0	11.102	115/208-230	9
		1800	B56	.7518ES1BB56C	370	F1	46	1.15	5.30	68.5	11.102	115/208-230	9
		1200	F56H	.7512ES1BF56C	669	F1	56	1.15	5.00	71.0	13.464	115/208-230	9
1	0.75	3600	D56	00136ES1BD56C	378	F1	46	1.15	6.40	67.0	12.283	115/208-230	9
		1800	D56	00118ES1BD56C	424	F1	52	1.15	7.00	70.3	12.283	115/208-230	9
1.5	1.1	3600	D56	00156ES1BD56C	454	F1	56	1.15	8.55	70.0	12.283	115/208-230	9
		1800	F56H	00158ES1BF56C	478	F1	58	1.15	8.70	76.5	13.464	115/208-230	9
2	1.5	3600	F56H	00236ES1BF56C	537	F1	65	1.15	10.0	74.0	13.464	115/208-230	9
		1800	G143/5TC	00218ES1B145TC	643	W1	68	1.15	10.5	78.1	14.882	115/208-230	9
3	2.2	3600	G143/5T	00336ES1E145TC	858	W1	66	1.15	6.00	84.0	14.882	208-230/460	9
		1800	184TC	00318ES1C184TC	913	W1	91	1.15	13.6	77.0	17.050	208-230	
		1800	184TC	00318ES1E184TC	913	W1	99	1.15	6.80	77.0	17.050	208-230/460	
5	3.7	3600	184T	00536ES1E184TC	1,077	W1	109	1.15	10.5	83.0	17.05	208-230/460	
		1800	184TC	00518ES1C184TC	1,103	W1	118	1.15	21.4	79.0	17.050	208-230	
		1800	184TC	00518ES1E184TC	1,103	W1	119	1.15	10.7	79.0	17.050	208-230/460	
7.5	5.5	3600	213T	00736ES1E213TC	1,598	W1	147	1.15	14.9	86.0	18.021	208-230/460	
		1800	215TC	00718ES1E215TC	1,410	W1	167	1.15	17.0	83.0	19.567	208-230/460	
10	7.5	3600	215T	01036ES1E215TC	1,970	W1	163	1.15	19.4	86.0	19.567	208-230/460	
		1800	215TC	01018ES1E215TC	1,633	W1	190	1.15	19.5	84.0	19.567	208-230/460	

TEFC – C-Face – Footless

HP	kW	RPM	NEMA Frame	Catalog Number	List Price	Mult. Symbol	Approx. Shipping Weight (lbs)	Service Factor	FL Amps @ High	FL. Eff (%)	"C" Dimension (in)	Voltage (V)	Notes
0.33	0.25	3600	B56C	.3336ES1BB56CFL	288	F1	36	1.15	2.85	53.0	11.102	115/208-230	9;20
		1800	B56C	.3318ES1BB56CFL	304	F1	36	1.15	2.80	61.0	11.102	115/208-230	9;20
0.5	0.37	3600	B56C	.5036ES1BB56CFL	313	F1	40	1.15	3.80	58.0	11.102	115/208-230	9;20
		1800	B56C	.5018ES1BB56CFL	333	F1	41	1.15	3.70	66.5	11.102	115/208-230	9;20
		1200	D56C	.5012ES1BD56CFL	535	F1	44	1.15	3.60	71.0	12.283	115/208-230	9;20
0.75	0.55	3600	B56C	.7536ES1BB56CFL	353	F1	41	1.15	5.20	64.0	11.102	115/208-230	9;20
		1800	B56C	.7518ES1BB56CFL	370	F1	46	1.15	5.30	68.5	11.102	115/208-230	9;20
		1200	F56C	.7512ES1BF56CFL	669	F1	56	1.15	5.00	71.0	13.464	115/208-230	9;20
1	0.75	3600	D56C	00136ES1BD56CFL	378	F1	46	1.15	6.40	67.0	12.283	115/208-230	9;20
		1800	D56C	00118ES1BD56CFL	424	F1	52	1.15	7.00	70.3	12.283	115/208-230	9;20
1.5	1.1	3600	D56C	00156ES1BD56CFL	454	F1	56	1.15	8.55	70.0	12.283	115/208-230	9;20
		1800	F56C	00158ES1BF56CFL	478	F1	58	1.15	8.70	76.5	13.464	115/208-230	9;20
2	1.5	3600	F56C	00236ES1BF56CFL	537	F1	65	1.15	10.0	74.0	13.464	115/208-230	9;20

Refer to electrical and mechanical data sections for additional technical information. Please refer to back cover for description of "NOTES"

For detailed specifications, data sheets, drawings and performance curves visit http://catalog.wegelectric.com

Single-Phase General Purpose Motors



TEFC – Foot Mount – Thermally Protected

HP	kW	RPM	NEMA Frame	Catalog Number	List Price	Mult. Symbol	Approx. Shipping Weight (lbs)	Service Factor	FL Amps @ High	FL. Eff (%)	"C" Dimension (in)	Voltage (V)	Notes
0.33	0.25	1800	B56	.3318ES1RFDB56	284	R1	23	1.15	2.80	61.0	11.102	115/230	4;9
0.5	0.37	3600	B56	.5036ES1BOLB56	316	F1	40	1.15	3.80	58.0	11.102	115/208-230	4;9
		1800	B56	.5018ES1RFDB56	308	R1	25	1.15	3.70	66.5	11.102	115/230	4;9
0.75	0.55	3600	B56	.7536ES1BOLB56	329	F1	41	1.15	5.20	64.0	11.102	115/208-230	4;9
		1800	B56	.7518ES1RFDB56	357	R1	28	1.15	5.30	68.5	11.102	115/230	4;9
1	0.75	3600	D56	00136ES1BOLD56	408	F1	46	1.15	6.40	67.0	12.283	115/208-230	4;9
		1800	F143/5T	00118ES1RFD143T	400	R1	42	1.15	7.00	70.3	13.839	115/230	4;9
		1800	D56	00118ES1RFDD56	394	R1	36	1.15	7.00	70.3	12.283	115/230	4;9
1.5	1.1	3600	D56	00156ES1BOLD56	463	F1	56	1.15	8.55	70.0	12.283	115/208-230	4;9
		1800	G143/5T	00158ES1RFD145T	504	R1	50	1.15	8.70	76.5	14.233	115/230	4;9
		1800	F56H	00158ES1RFDF56H	502	R1	51	1.15	8.70	76.5	13.464	115/230	4;9
2	1.5	3600	F56H	00236ES1BOLF56	592	F1	65	1.15	10.0	74.0	13.464	115/208-230	4;9
		1800	G143/5T	00218ES1RFD145T	578	R1	57	1.15	10.5	78.1	14.233	115/230	4;9
		1800	W182/4T	00218ES1RFD182T	790	R1	95	1.15	10.0	81.0	17.244	115/230	4
		1800	G56H	00218ES1RFDG56H	529	R1	55	1.15	10.5	78.1	13.858	115/230	4;9
3	2.2	1800	W182/4T	00318ES1DFD184T	915	R1	99	1.15	14.5	81.0	17.244	230	4
5	3.7	1800	184T	00518ES1DFD184T	1,074	R1	119	1.15	21.4	79.0	17.050	230	4
		1800	W213/5T	00518ES1DFD215T	1,205	R1	133	1.15	21.4	79.0	20.984	230	4
		1800	W213/5TZ	00518ES1DFD215Z	1,205	R1	132	1.15	21.4	79.0	20.984	230	4
7.5	5.5	1800	215T	00718ES1DFD215T	1,463	R1	166	1.15	33.0	83.0	19.567	230	4
		1800	215TZ	00718ES1DFD215Z	1,463	R1	166	1.15	33.0	83.0	19.567	230	4
10	7.5	1800	215T	01018ES1DFD215T	1,692	R1	187	1.15	40.0	83.0	19.567	230	4

Refer to electrical and mechanical data sections for additional technical information. Please refer to back cover for description of "NOTES"

For detailed specifications, data sheets, drawings and performance curves visit http://catalog.wegelectric.com

Data subject to change without notice.



ODP – Foot Mount

HP	kW	RPM	NEMA Frame	Catalog Number	List Price	Mult. Symbol	Approx. Shipping Weight (lbs)	Service Factor	FL Amps @ High	FL. Eff (%)	"C" Dimension (in)	Voltage (V)	Notes
0.12	0.09	1800	B48	.12180S1BB48	201	F1B	17	1.40	1.60	48.1	9.252	115/208-230	9
		3600	B48	.16360S1BB48	216	F1B	17	1.35	1.55	49.9	9.252	115/208-230	9
0.16	0.12	1800	B48	.16180S1BB48	208	F1B	17	1.35	1.85	50.3	9.252	115/208-230	9
		1800	B48	.16180S1BSPB48	224	F1B	19	1.35	1.90	49.9	9.252	115/208-230	9;16
		3600	56	.25360S1B56	220	F1B	19	1.35	2.15	54.7	9.646	115/208-230	9
		3600	B48	.25360S1BB48	220	F1B	19	1.35	2.15	54.7	9.252	115/208-230	9
0.25	0.18	1800	56	.25180S1B56	209	F1B	19	1.35	2.65	55.9	9.646	115/208-230	9
		1800	B48	.25180S1BB48	209	F1B	19	1.35	2.65	55.9	9.252	115/208-230	9
		1800	B48	.25180S1BSPB48	240	F1B	20	1.35	2.40	59.5	9.252	115/208-230	9;16
		3600	C48	.33360S1BC48	222	F1B	22	1.35	2.85	57.6	10.197	115/208-230	9
		3600	C56	.33360S1BC56	222	F1B	22	1.35	2.85	57.6	10.551	115/208-230	9
0.33	0.25	1800	C48	.33180S1BC48	237	F1B	22	1.35	3.11	58.6	10.197	115/208-230	9
		1800	C56	.33180S1BC56	237	F1B	22	1.35	3.30	58.2	10.551	115/208-230	9
		1800	C48	.33180S1BSPC48	258	F1B	22	1.35	3.13	60.0	10.197	115/208-230	9;16
		3600	C48	.50360S1BC48	237	F1B	24	1.25	3.60	64.4	10.197	115/208-230	9
		3600	C56	.50360S1BC56	242	F1B	24	1.25	3.60	64.4	10.551	115/208-230	9
		3600	C56	.50360S1BCDC56	224	C1	24	1.00	3.30	63.0	10.551	115/208-230	1;4;6;9
0.5	0.37	1800	C48	.50180S1BC48	273	F1B	24	1.25	4.25	61.7	10.197	115/208-230	9
		1800	C56	.50180S1BC56	264	F1B	24	1.25	4.25	61.7	10.551	115/208-230	9
		1800	C48	.50180S1BSPC48	279	F1B	24	1.25	4.00	63.5	10.197	115/208-230	9;16
		3600	B56	.75360S1BB56	274	F1B	32	1.25	5.25	67.2	11.102	115/208-230	9
0.75	0.55	3600	C56	.75360S1BCDC56	237	C1	32	1.00	4.60	66.0	10.551	115/208-230	1;4;6;9
		1800	D56	.75180S1BD56	328	F1B	36	1.25	5.40	66.7	12.283	115/208-230	9
		3600	B56	001360S1BCDB56	278	C1	36	1.00	6.10	67.0	11.102	115/208-230	1;4;6;9
1	0.75	3600	D56	001360S1BD56	296	F1B	36	1.25	6.80	66.3	12.283	115/208-230	9
		1800	D56	00118OS1BD56	355	F1B	39	1.15	7.00	71.4	12.283	115/208-230	9
		3600	D56	001560S1BCDD56	311	C1	40	1.00	8.40	68.0	12.283	115/208-230	1;4;6;9
		3600	D56	001560S1BD56	333	F1B	40	1.15	8.90	70.0	12.283	115/208-230	9
1.5	1.1	1800	F56H	001580S1BCH56H	438	F1B	37	1.15	10.2	71.3	13.464	115/208-230	9
		1800	F56H	001580S1BF56	438	F1B	37	1.15	10.2	71.3	13.464	115/208-230	9
		1800	F56H	001580S1B0F56	439	F1B	51	1.15	10.2	71.3	13.464	115/208-230	3;9
		3600	D56	002360S1BCDD56	372	C1	41	1.00	11.0	70.0	12.283	115/208-230	1;4;6;9
2	1.5	3600	F56H	002360S1BF56	409	F1B	41	1.15	11.0	77.9	13.464	115/208-230	9
		1800	G56H	002180S1BG56	522	F1B	46	1.00	14.0	71.4	13.858	115/208-230	1;9
		3600	182T	003360S1B182T	607	W1B	90	1.25	15.0	81.5	14.448	115/208-230	
		3600	F56H	003360S1BCDF56	432	C1	44	1.00	14.7	77.0	13.464	115/208-230	1;4;6;9
		3600	G56H	003360S1BG56	475	F1B	44	1.00	15.5	78.0	13.858	115/208-230	1;9
		3600	182T	003360S1C182T	606	W1B	80	1.25	15.0	81.5	14.448	208-230	
3	2.2	3600	182T	003360S1D182T	606	W1B	88	1.25	15.0	81.5	14.448	230	
		1800	184T	003180S1B184T	690	W1B	103	1.25	17.5	75.0	14.870	115/208-230	
		1800	184T	003180S1C184T	690	W1B	103	1.25	17.5	75.0	14.870	208-230	
		1800	184T	003180S1CCD0L184T	687	C1	97	1.15	17.5	75.0	14.875	208-230	4;6
		1800	184T	003180S1D184T	691	W1B	103	1.25	17.6	74.0	14.870	230	

Refer to electrical and mechanical data sections for additional technical information. Please refer to back cover for description of "NOTES"

Continued on next page

For detailed specifications, data sheets, drawings and performance curves visit http://catalog.wegelectric.com

Data subject to change without notice.

Single-Phase General Purpose Motors

ODP – Foot Mount *continued*

HP	kW	RPM	NEMA Frame	Catalog Number	List Price	Mult. Symbol	Approx. Shipping Weight (lbs)	Service Factor	FL Amps @ High	FL. Eff (%)	"C" Dimension (in)	Voltage (V)	Notes
4	3.0	3600	G56HZ	00436OS1DCDG56HZ	453	C1	47	1.15	16.5	82.5	14.234	230	4;5;6;9
5	3.7	3600	184T	00536OS1B184T	863	W1B	109	1.25	21.0	81.5	14.870	115/208-230	
		3600	184T	00536OS1C184T	863	W1B	107	1.25	21.0	81.5	14.870	208-230	
		3600	G56H	00536OS1CCDG56	458	C1	52	1.00	19.0	85.0	13.858	208-230	1;4;6;9
		3600	G56HZ	00536OS1CCDG56HZ	481	C1	52	1.00	19.0	85.0	14.234	208-230	1;4;5;6;9
		3600	184T	00536OS1D184T	862	W1B	107	1.25	21.0	81.5	14.870	230	
		3600	184T	00536OS1E184T	861	W1B	109	1.25	10.5	81.5	14.870	208-230/460	
		1800	184T	00518OS1B184T	727	W1B	109	1.25	21.5	82.5	14.870	115/208-230	
		1800	184T	00518OS1C184T	725	W1B	105	1.25	22.0	82.5	14.870	208-230	
		1800	184T	00518OS1CCD184T	682	C1	97	1.25	21.5	82.5	14.875	208-230	6;10
		1800	184T	00518OS1CCD0L184T	721	C1	98	1.15	21.5	82.5	14.875	208-230	4;6
6.4	4.8	3600	182/4Y	00636OS1XCD182/4Y	526	C1	53	1.00	23.0	85.0	15.650	240	1;4;5;6;9
7.5	5.5	3600	184T	00736OS1C184T	961	W1B	117	1.25	30.0	85.0	14.870	208-230	
		1800	215T	00718OS1CCD215T	961	C1	132	1.15	31.3	84.5	19.660	208-230	5;6;9;28
		1800	215T	00718OS1F215T	961	W1B	127	1.15	15.3	85.0	19.660	230/460	5;9;28
10	7.5	1800	215T	01018OS1CCD215T	1,468	C1	161	1.15	43.0	85.0	21.235	208-230	5;6;9;28

ODP – Resilient Base



HP	kW	RPM	NEMA Frame	Catalog Number	List Price	Mult. Symbol	Approx. Shipping Weight (lbs)	Service Factor	FL Amps @ High	FL. Eff (%)	"C" Dimension (in)	Voltage (V)	Notes
0.25	0.18	1800	B48	.25180S1BRB0B48	274	F1B	22	1.35	2.40	59.5	10.632	115/208-230	3;9;13;16
0.33	0.25	1800	C48	.33180S1BRB0C48	284	F1B	26	1.35	3.13	60.0	10.039	115/208-230	3;9;13;16
		1800	C56	.33180S1BRB0C56	288	F1B	22	1.35	3.13	60.0	11.593	115/208-230	3;9;13;16
		1800	C56	.33180S1PRB0C56	288	F1B	22	1.35	2.58	58.6	11.593	277	3;9;13
0.5	0.37	1800	C48	.50180S1BRB0C48	311	F1B	28	1.25	4.00	63.5	10.039	115/208-230	3;9;13;16
		1800	C56	.50180S1BRB0C56	316	F1B	24	1.25	4.00	63.5	11.593	115/208-230	3;9;13;16
		1800	C56	.50180S1PRB0C56	316	F1B	24	1.35	3.34	63.2	11.593	277	3;9;13
0.75	0.55	1800	D56	.75180S1BCHRB56	379	F1B	36	1.25	5.40	66.7	12.992	115/208-230	3;9;13
		1800	D56	.75180S1BRB0D56	379	F1B	36	1.25	5.40	66.7	12.992	115/208-230	3;9;13
		1800	D56	.75180S1PRB0D56	379	F1B	36	1.25	4.48	66.7	12.992	277	3;9;13
1	0.75	1800	D56	00118OS1BRB0D56	408	F1B	39	1.15	7.00	71.4	12.992	115/208-230	3;9;13
		1800	D56	00118OS1PRB0D56	408	F1B	39	1.15	5.81	71.4	12.992	277	3;9;13
1.5	1.1	3600	D56	00156OS1BRB0D56	386	F1B	40	1.15	8.90	70.0	12.992	115/208-230	3;9;13
		1800	D56	00158OS1BRB0D56	491	F1B	37	1.15	9.70	73.0	12.992	115/208-230	3;9;13

Refer to electrical and mechanical data sections for additional technical information. Please refer to back cover for description of "NOTES"

For detailed specifications, data sheets, drawings and performance curves visit http://catalog.wegelectric.com

Data subject to change without notice.



ODP – C-Face – Foot Mount

HP	kW	RPM	NEMA Frame	Catalog Number	List Price	Mult. Symbol	Approx. Shipping Weight (lbs)	Service Factor	FL Amps @ High	FL. Eff (%)	"C" Dimension (in)	Voltage (V)	Notes
0.12	0.09	1800	B48C	.12180S1BB48C	222	F1B	17	1.40	1.60	48.1	9.252	115/208-230	9
		3600	B48C	.16360S1BB48C	237	F1B	17	1.35	1.55	49.9	9.252	115/208-230	9
0.16	0.12	1800	B48C	.16180S1BB48C	231	F1B	17	1.35	1.85	50.3	9.252	115/208-230	9
		1800	B48C	.16180S1BSPB48C	247	F1B	19	1.35	1.90	49.9	9.252	115/208-230	9;16
		3600	56C	.25360S1B56C	241	F1B	19	1.35	2.15	54.7	9.646	115/208-230	9
		3600	B48C	.25360S1BB48C	241	F1B	19	1.35	2.15	54.7	9.252	115/208-230	9
0.25	0.18	1800	56C	.25180S1B56C	233	F1B	19	1.35	2.65	55.9	9.646	115/208-230	9
		1800	B48C	.25180S1BB48C	233	F1B	19	1.35	2.65	55.9	9.252	115/208-230	9
		1800	B48C	.25180S1BSPB48C	263	F1B	20	1.35	2.40	59.5	9.252	115/208-230	9;16
		3600	C48C	.33360S1BC48C	244	F1B	22	1.35	2.85	57.6	10.197	115/208-230	9
		3600	C56C	.33360S1BC56C	244	F1B	22	1.35	2.85	57.6	10.551	115/208-230	9
0.33	0.25	1800	C48C	.33180S1BC48C	258	F1B	22	1.35	3.11	58.6	10.197	115/208-230	9
		1800	C56C	.33180S1BC56C	258	F1B	22	1.35	3.30	58.2	10.551	115/208-230	9
		1800	C48C	.33180S1BSPC48C	282	F1B	22	1.35	3.13	60.0	10.197	115/208-230	9;16
		3600	C48C	.50360S1BC48C	258	F1B	24	1.25	3.60	64.4	10.197	115/208-230	9
		3600	C56C	.50360S1BC56C	266	F1B	24	1.25	3.60	64.4	10.551	115/208-230	9
0.5	0.37	1800	C48CH	.50180S1BC48CH	296	F1B	24	1.25	4.25	61.7	10.197	115/208-230	9
		1800	C56C	.50180S1BC56C	286	F1B	24	1.25	4.25	61.7	10.551	115/208-230	9
		1800	C48C	.50180S1BSPC48C	300	F1B	24	1.25	4.00	63.5	10.197	115/208-230	9;16
0.75	0.55	3600	B56C	.75360S1BB56C	297	F1B	32	1.25	5.25	67.2	11.102	115/208-230	9
		1800	D56C	.75180S1BD56C	349	F1B	36	1.25	5.40	66.7	12.283	115/208-230	9
1	0.75	3600	D56C	001360S1BD56C	317	F1B	36	1.25	6.80	66.3	12.283	115/208-230	9
		1800	D56C	001180S1BD56C	378	F1B	39	1.15	7.00	71.4	12.283	115/208-230	9
1.5	1.1	3600	D56C	001560S1BD56C	355	F1B	40	1.15	8.90	70.0	12.283	115/208-230	9
		1800	F56HC	001580S1BF56C	461	F1B	37	1.15	10.2	71.3	13.464	115/208-230	9
2	1.5	3600	F56HC	002360S1BF56C	432	F1B	41	1.15	11.0	77.9	13.464	115/208-230	9
		1800	G56HC	002180S1BG56C	544	F1B	43	1.00	14.0	71.4	13.858	115/208-230	1;9
3	2.2	3600	G56HC	003360S1BG56C	496	F1B	44	1.00	15.5	78.0	13.858	115/208-230	1;9

Refer to electrical and mechanical data sections for additional technical information. Please refer to back cover for description of "NOTES"

For detailed specifications, data sheets, drawings and performance curves visit http://catalog.wegelectric.com

Data subject to change without notice.

Single-Phase General Purpose Motors

ODP – C-Face – Footless

HP	kW	RPM	NEMA Frame	Catalog Number	List Price	Mult. Symbol	Approx. Shipping Weight (lbs)	Service Factor	FL Amps @ High	FL. Eff (%)	"C" Dimension (in)	Voltage (V)	Notes
0.33	0.25	3600	C56C	.3336OS1BC56CFL	244	F1B	22	1.35	2.85	57.6	10.551	115/208-230	9;20
		1800	C56C	.3318OS1BC56CFL	258	F1B	22	1.35	3.30	58.2	10.551	115/208-230	9;20
0.5	0.37	3600	C56C	.5036OS1BC56CFL	266	F1B	24	1.25	3.60	64.4	10.551	115/208-230	9;20
		1800	C56C	.5018OS1BC56CFL	286	F1B	24	1.25	4.25	61.7	10.551	115/208-230	9;20
0.75	0.55	3600	B56C	.7536OS1BB56CFL	297	F1B	32	1.25	5.25	67.2	11.102	115/208-230	9;20
		1800	D56C	.7518OS1BD56CFL	349	F1B	36	1.25	5.40	66.7	12.283	115/208-230	9;20
1	0.75	3600	D56C	00136OS1BD56CFL	317	F1B	36	1.25	6.80	66.3	12.283	115/208-230	9;20
		1800	D56C	00118OS1BD56CFL	378	F1B	39	1.15	7.00	71.4	12.283	115/208-230	9;20
1.5	1.1	3600	D56C	00156OS1BD56CFL	355	F1B	40	1.15	8.90	70.0	12.283	115/208-230	9;20
		1800	F56C	00158OS1BF56CFL	461	F1B	37	1.15	10.2	71.3	13.464	115/208-230	9;20
2	1.5	3600	F56C	00236OS1BF56CFL	432	F1B	41	1.15	11.0	77.9	13.464	115/208-230	9;20
		1800	G56C	00218OS1BG56CFL	544	F1B	43	1.00	14.0	71.4	13.858	115/208-230	1;9;20
3	2.2	3600	G56C	00336OS1BG56CFL	496	F1B	44	1.00	15.5	78.0	13.858	115/208-230	1;9;20



ODP – Foot Mount – Thermally protected

HP	kW	RPM	NEMA Frame	Catalog Number	List Price	Mult. Symbol	Approx. Shipping Weight (lbs)	Service Factor	FL Amps @ High	FL. Eff (%)	"C" Dimension (in)	Voltage (V)	Notes
0.5	0.37	3600	C56	.5036OS1BCDC56	224	C1	24	1.00	3.30	63.0	10.551	115/208-230	1;4;6;9
0.75	0.55	3600	C56	.7536OS1BCDC56	237	C1	32	1.00	4.60	66.0	10.551	115/208-230	1;4;6;9
1	0.75	3600	B56	00136OS1BCDB56	278	C1	36	1.00	6.10	67.0	11.102	115/208-230	1;4;6;9
1.5	1.1	3600	D56	00156OS1BCDD56	311	C1	40	1.00	8.40	68.0	12.283	115/208-230	1;4;6;9
		1800	F56H	00158OS1BOF56	439	F1B	51	1.15	10.2	71.3	13.464	115/208-230	3;9
2	1.5	3600	D56	00236OS1BCDD56	372	C1	41	1.00	11.0	70.0	12.283	115/208-230	1;4;6;9
3	2.2	3600	F56H	00336OS1BCDF56	432	C1	44	1.00	14.7	77.0	13.464	115/208-230	1;4;6;9
4	3.0	3600	G56HZ	00436OS1DCDG56HZ	453	C1	47	1.15	16.5	82.5	14.234	230	4;5;6;9
5	3.7	3600	G56H	00536OS1CCDG56	458	C1	52	1.00	19.0	85.0	13.858	208-230	1;4;6;9
		3600	G56HZ	00536OS1CCDG56HZ	481	C1	52	1.00	19.0	85.0	14.234	208-230	1;4;5;6;9

Refer to electrical and mechanical data sections for additional technical information. Please refer to back cover for description of "NOTES"

For detailed specifications, data sheets, drawings and performance curves visit http://catalog.wegelectric.com

Data subject to change without notice.

Severe Duty is **Standard** with WEG **W22** motors.



No matter what you call it, WEG's W22 standard product is designed for:

DUTY	STANDARD
Mill-Chem	✓
Tough Service	✓
Severe Duty	✓
Crusher Duty	✓
WEG Duty	✓

You do not need a special motor for severe duty. Severe Duty is standard with WEG W22 motors.

High performance with maximum energy efficiency is the goal of the WEG W22 electric motor. High efficiency and low cost of ownership throughout the entire motor lifetime have been the basis for the W22 development. A design created to maximize performance and energy savings. Optimized cooling system, large and accessible terminal box, exclusive bearing seal system, low vibration levels, and a 1.25 service factor are just a few of many STANDARD features of our W22 motors.

Available in NEMA Premium or Super Premium Efficiency levels.

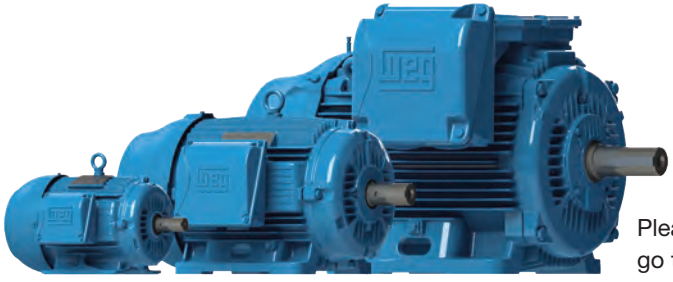

Please contact your authorized WEG distributor or go to **weg.net/us** for further information or additional specifications. **1-800-ASK-4WEG**

www.weg.net/us

Three Phase General Purpose Motors

W22 - Cast Iron

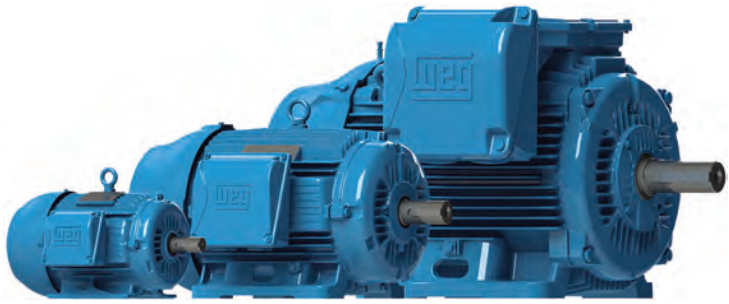

Standard Features:

- 50/60 Hz rated (380V on nameplate - 400/415 available)
- Rated 50HZ at same horsepower up to 250HP 1.0 Service Factor for 2,4 & 6 pole motors
- Rated 50Hz at same horsepower up to 125HP 1.0 Service Factor for 8 pole motors
- Class F insulation (impregnation resin and magnet wire are class H)
- F1 mounted (cast iron frames are F2 convertible). Frames 447T and up can easily be F2 converted by simply rotating the terminal box adapter
- Cast iron frames: regreasable ball bearings (frames 254T and up)
- Gasketed conduit box

Inverter Rated

1000:1 for Variable Torque

NEMA Premium

20:1 Constant Torque up to 250HP

6:1 Constant Torque 300HP and up

High Efficiency (EPAct)

12:1 Constant Torque up to 250HP

4:1 Constant Torque 300HP and up

ADDITIONAL TECHNICAL DATA

ELECTRICAL DATA: **p. B-6**

MECHANICAL DATA: **p. C-2**

Features that make a difference:

- All NEMA Premium ratings have a 1.25 service factor (up to 100 HP) resulting in cooler operation and extended life of the motor
- All Cast Iron Construction, including Terminal Box and Fan Cover (*)
- Solid feet for reduced vibration levels and impact absorption
- Optimized ventilation system for cooler operation and extended life
- High Grade FC200 cast iron provides superior mechanical strength and heat dissipation
- All WEG W22 motors are Totally Enclosed Fan Cooled with a true IP55 rating against dust and moisture. (IPW56, IPW65 and IPW66 available as optional)
- Exclusive W-Seal 364T and larger provides superior bearing protection
- Taconite Labyrinth seal 586 Frame and larger
- Exclusive WEG painting system exceed 200hrs ASTM 117 corrosion test (Exceeds IEEE841 standard)
- Balanced to 0.08 inches per second vibration limits (Meets IEEE841 standard)
- Four Bolt Conduit Cover with glued Neoprene Gasket
- Impregnation Resin and magnet wire are insulation class H
- Stainless Steel Nameplate - Laser etched with high contrast background
- Corrosion Proof Drains
- Inverter Duty per NEMA MG1, Part 31
- Certified Class I Div 2, Groups A, B, C & D; Class II, Div 2, Groups F & G
- Suitable for IEEE45 and USCG 259 – Marine Duty

*Cast iron fan cover available as an option on 143-215T frames

TEFC - Cast Iron

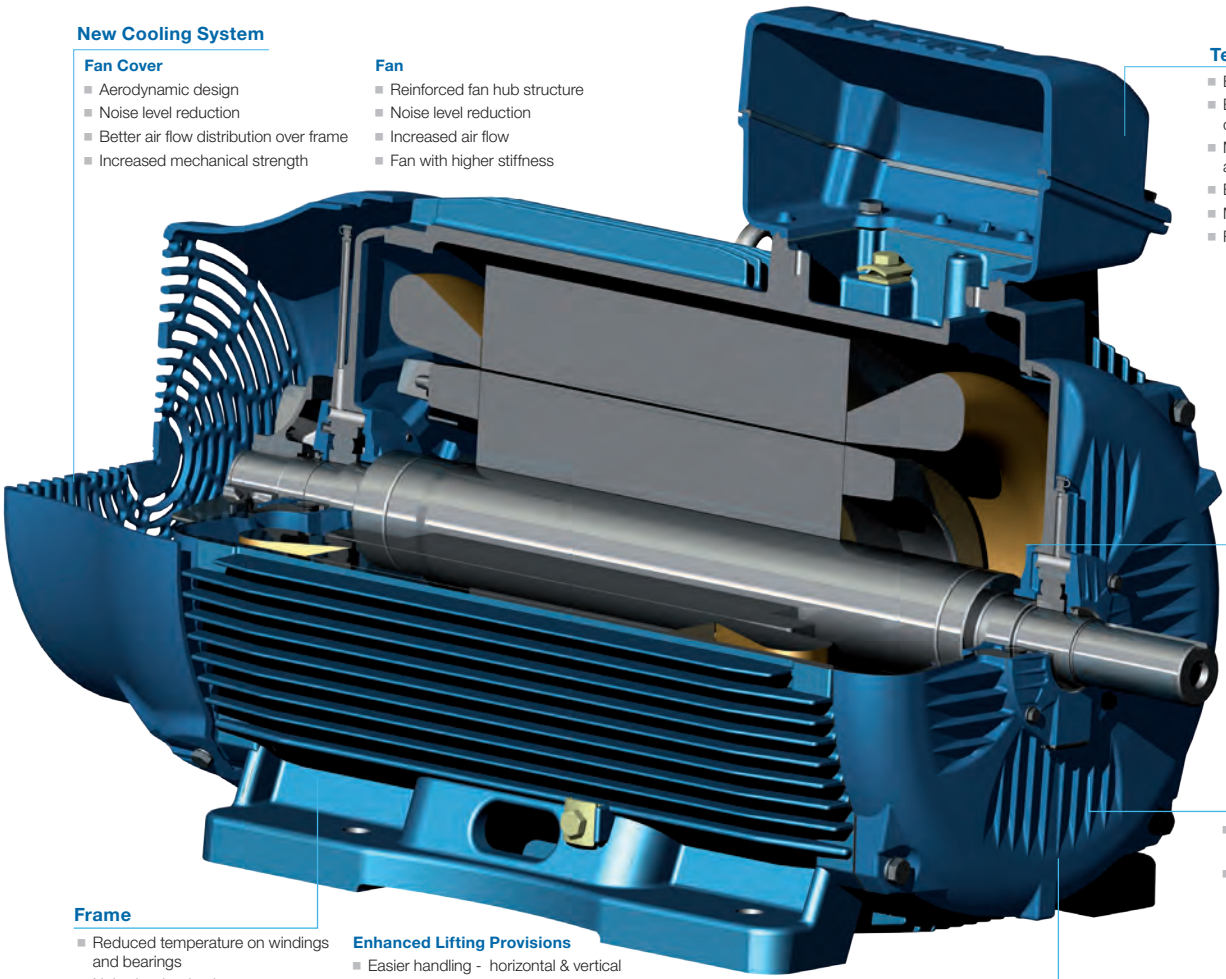

New Cooling System

Fan Cover
- Aerodynamic design
- Noise level reduction
- Better air flow distribution over frame
- Increased mechanical strength

Fan
- Reinforced fan hub structure
- Noise level reduction
- Increased air flow
- Fan with higher stiffness

Terminal Box
- Better connection quality
- Easier cable handling during installation
- More space available for accessory installation
- Easier Maintenance
- Mounting F1/F2/F3
- Rotation on 90° stages

Bearing Caps

External
- Finned surface for improved bearing heat dissipation

Internal
- Change of grease path for positive lubrication
- Bearing lubrication quality improvement
- Reduced bearing temperature

Seal Subsystem
- Increased dust and moisture protection
- Increased protection to high-pressure cleaning

Frame
- Reduced temperature on windings and bearings
- Noise level reduction
- Terminal box position outlet on top

Pad for vibration sensor
- Displaced 90° from each other

Enhanced Lifting Provisions
- Easier handling - horizontal & vertical
- Higher mechanical strength and handling safety

Solid feet
- More impact resistance
- Ideal for high vibration level applications

Endshields Subsystem

DE (Drive Endshield)
- New fin design
- Bearing moved outwards for better load support
- Improved bearing heat dissipation for reduced bearing temperature
- Reinforced endshield structure

NDE (Non-Drive Endshield)
- New design with smooth exterior surface
- Improved air flow
- Noise level reduction
- Improved structural rigidity for low vibration

Three-Phase General Purpose Motors

TEFC - Rolled Steel



Standard Features:

- Rated Output: 0.25 to 25 HP
- Number of Poles: 2 to 6
- Class F insulation
- Frame Sizes: NEMA 56 to 254/6T
- Efficiency levels: High Efficiency (EPAct) and NEMA Premium®
- Frequency: 60 Hz (dual rated 50 Hz 190-220/380-415V)
- IP55 standard, IP56 optional
- F1 mount as standard
- Foot mount / C-face / Footless availability
- Enclosure: TEFC, TEAO, and TENV as optional
- Aluminum endshields
- Cast Iron flanges for improved strength (182/4TC and larger)
- Internal bolts, giving a clean surface to the motor, avoiding trapping materials and allowing easy paint job after assembly to the load if required
- Double shielded ball bearings on frames 56 to 213/5T. Optional double sealed ball bearings and/or bearing cap
- Versions: General Purpose, Jet Pump, Close-coupled Pump type “JM” and “JP”, and Crop Dryer.

Optional Features:

- IP56 ingress protection
- F2 and F3 mount
- Enclosure: TEAO and TENV
- Regreasable bearings optional on 182/4T and 213/5T
- Double sealed ball bearings and/or bearing cap
- Drip cover
- Internal Aegis® SGR
- Space heaters and thermal protection (thermostats and thermistors)
- Refer to the mod section for more options

Features that make a difference:

- New ventilation system for improved thermal performance
- Robust feet design suitable for tougher applications
- New and more robust eyebolts design (frames 182/4T and up) plus a second eyebolt on non-drive end allowing vertical lifting capability (frames 213/5T and 254/6T)
- Oversized diagonally split aluminum terminal box that exceeds IP55 requirements
- Terminal box rotatable in 90 degrees increments for flexibility during installation
- Option for internal AEGIS® SGR
- Color coded leads as standard for easy wiring
- Regreasable ball bearings on 254/6T frame as standard (optional for 182/4T and 213/5T)
- IP55 Ingress Protection as standard, being appropriate for severe environments
- Bearing cap as standard on flanged motors, optional on non flanged
- Suitable for VFD operation as per NEMA MG1 part 31.4.4.2
- Motor frame painting system 500 hours salt spray resistant

ADDITIONAL TECHNICAL DATA

ELECTRICAL DATA: p. B-17
MECHANICAL DATA: p. C-7



TEFC – Foot Mount

HP	kW	RPM	NEMA Frame	Catalog Number	List Price	Mult. Symbol	Approx. Shipping Weight (lbs)	Service Factor	FL Amps @ High	FL. Eff (%)	"C" Dimension (in)	Voltage (V)	Notes
1	0.75	3600	143/5T	00136ET3E143T-W22	538	N1	43	1.25	1.43	78.5	13.346	208-230/460	
		3600	143/5T	00136ET3H143T-W22	538	N1	41	1.25	1.14	78.5	13.346	575	
		1800	143/5T	00118ET3E143T-S	459	RSP	43	1.15	1.47	85.5	13.583	208-230/460	9
		1800	143/5T	00118ET3E143T-W22	527	N1	46	1.25	1.41	85.5	13.346	208-230/460	
		1800	143/5T	00118ET3ERS143T	459	RSP	39	1.15	1.55	85.5	14.095	208-230/460	9
		1800	143/5T	00118ET3H143T-W22	527	N1	46	1.25	1.13	85.5	13.346	575	
		1200	143/5T	00112ET3E145T-S	529	RSP	43	1.15	1.58	82.5	13.583	208-230/460	9
		1200	143/5T	00112ET3E145T-W22	608	N1	54	1.25	1.73	82.5	13.346	208-230/460	
		1200	143/5T	00112ET3ERS145T	529	RSP	45	1.15	1.75	82.5	14.095	208-230/460	9
		1200	143/5T	00112ET3H145T-S	529	RSP	43	1.15	1.27	82.5	13.583	575	9
		1200	143/5T	00112ET3H145T-W22	608	N1	54	1.25	1.38	82.5	13.346	575	
		1200	143/5T	00112ET3HRS145T	529	RSP	33	1.15	1.40	82.5	14.095	575	9
		900	182/4T	00109ET3E182T-W22	1,043	N1	87	1.25	2.30	78.5	15.860	208-230/460	
		900	182/4T	00109ET3H182T-W22	1,043	N1	104	1.25	1.84	78.5	15.860	575	
1.5	1.1	3600	143/5T	00156ET3E143T-S	473	RSP	39	1.15	1.87	84.0	13.189	208-230/460	9
		3600	143/5T	00156ET3E143T-W22	543	N1	47	1.25	1.91	84.0	13.346	208-230/460	
		3600	143/5T	00156ET3ERS143T	473	RSP	37	1.15	1.95	84.0	14.095	208-230/460	9
		3600	143/5T	00156ET3H143T-W22	543	N1	47	1.25	1.53	84.0	13.346	575	
		1800	143/5T	00158ET3E145T-S	480	RSP	43	1.15	2.02	86.5	13.583	208-230/460	9
		1800	143/5T	00158ET3E145T-W22	551	N1	54	1.25	2.02	86.5	13.346	208-230/460	
		1800	143/5T	00158ET3ERS145T	480	RSP	47	1.15	2.25	86.5	14.095	208-230/460	9
		1800	143/5T	00158ET3H145T-S	480	RSP	43	1.15	1.62	86.5	13.583	575	9
		1800	143/5T	00158ET3H145T-W22	551	N1	53	1.25	1.62	86.5	13.346	575	
		1800	143/5T	00158ET3HRS145T	480	RSP	47	1.15	1.80	86.5	14.095	575	9
		1200	182/4T	00152ET3E182T-S	656	RSP	73	1.15	2.22	87.5	16.339	208-230/460	9
		1200	182/4T	00152ET3E182T-W22	754	N1	98	1.25	2.39	87.5	15.860	208-230/460	
		1200	182/4T	00152ET3ERS182T	656	RSP	83	1.15	2.39	87.5	16.404	208-230/460	9
		1200	182/4T	00152ET3H182T-S	656	RSP	73	1.15	1.78	87.5	16.339	575	9
		1200	182/4T	00152ET3H182T-W22	754	N1	94	1.25	1.91	87.5	15.860	575	
		1200	182/4T	00152ET3HRS182T	656	RSP	80	1.15	1.91	87.5	16.404	575	9
		900	182/4T	00159EP3E184T-W22	983	W1	86	1.25	2.72	77.0	15.860	208-230/460	30
		900	182/4T	00159ET3E184T-W22	1,207	N1	102	1.25	2.70	82.5	15.860	208-230/460	

Continued on next page

Refer to electrical and mechanical data sections for additional technical information. Please refer to back cover for description of "NOTES"

For detailed specifications, data sheets, drawings and performance curves visit http://catalog.wegelectric.com

TEFC – Foot Mount *continued*

HP	kW	RPM	NEMA Frame	Catalog Number	List Price	Mult. Symbol	Approx. Shipping Weight (lbs)	Service Factor	FL Amps @ High	FL. Eff (%)	"C" Dimension (in)	Voltage (V)	Notes
2	1.5	3600	143/5T	00236ET3E145T-S	514	RSP	45	1.15	2.47	85.5	13.976	208-230/460	9
		3600	143/5T	00236ET3E145T-W22	591	N1	53	1.25	2.53	85.5	13.346	208-230/460	
		3600	143/5T	00236ET3ERS145T	514	RSP	46	1.15	2.50	85.5	14.095	208-230/460	9
		3600	143/5T	00236ET3H145T-S	514	RSP	45	1.15	1.98	85.5	13.976	575	9
		3600	143/5T	00236ET3H145T-W22	591	N1	54	1.25	2.02	85.5	13.346	575	
		3600	143/5T	00236ET3HRS145T	514	RSP	46	1.15	2.00	85.5	14.095	575	9
		1800	143/5T	00218ET3E145T-S	533	RSP	47	1.15	2.72	86.5	13.976	208-230/460	9
		1800	143/5T	00218ET3E145T-W22	612	N1	56	1.25	2.61	86.5	13.346	208-230/460	
		1800	143/5T	00218ET3ERS145T	533	RSP	53	1.15	2.85	86.5	14.095	208-230/460	9
		1800	143/5T	00218ET3H145T-S	533	RSP	47	1.15	2.18	86.5	13.976	575	9
		1800	143/5T	00218ET3H145T-W22	612	N1	55	1.25	2.09	86.5	13.346	575	
		1800	143/5T	00218ET3HRS145T	533	RSP	53	1.15	2.28	86.5	14.095	575	9
		1200	182/4T	00212ET3E184T-S	713	RSP	83	1.15	3.00	88.5	17.126	208-230/460	9
		1200	182/4T	00212ET3E184T-W22	819	N1	107	1.25	3.23	88.5	15.860	208-230/460	
		1200	182/4T	00212ET3ERS184T	713	RSP	95	1.15	3.22	88.5	16.404	208-230/460	9
		1200	182/4T	00212ET3H184T-S	713	RSP	83	1.15	2.40	88.5	17.126	575	9
		1200	182/4T	00212ET3H184T-W22	819	N1	107	1.25	2.58	88.5	15.860	575	
		1200	182/4T	00212ET3HRS184T	713	RSP	95	1.15	2.58	88.5	16.404	575	9
		900	213/5T	00209EP3E213T-W22	1,480	W1	132	1.25	3.46	82.5	19.517	208-230/460	30
		900	213/5T	00209EP3H213T-W22	1,480	W1	137	1.25	2.77	82.5	19.517	575	30
		900	213/5T	00209ET3E213T-W22	1,848	N1	161	1.25	3.39	85.5	19.517	208-230/460	
3	2.2	3600	182/4T	00336ET3E182T-S	665	RSP	71	1.15	3.67	86.5	16.339	208-230/460	9
		3600	182/4T	00336ET3E182T-W22	763	N1	101	1.25	3.63	86.5	15.860	208-230/460	
		3600	182/4T	00336ET3ERS182T	665	RSP	84	1.15	3.68	87.5	16.404	208-230/460	9
		3600	182/4T	00336ET3H182T-S	665	RSP	71	1.15	2.94	86.5	16.339	575	9
		3600	182/4T	00336ET3H182T-W22	763	N1	99	1.25	2.90	86.5	15.860	575	
		3600	182/4T	00336ET3HRS182T	665	RSP	87	1.15	2.94	87.5	16.404	575	9
		1800	182/4T	00318ET3E182T-S	577	RSP	87	1.15	3.81	89.5	17.894	208-230/460	9
		1800	182/4T	00318ET3E182T-W22	663	N1	96	1.25	3.88	89.5	15.860	208-230/460	
		1800	182/4T	00318ET3ERS182T	577	RSP	66	1.15	3.91	89.5	16.404	208-230/460	9
		1800	182/4T	00318ET3H182T-S	577	RSP	87	1.15	3.05	89.5	17.894	575	9
		1800	182/4T	00318ET3H182T-W22	663	N1	96	1.25	3.10	89.5	15.860	575	
		1800	182/4T	00318ET3HRS182T	577	RSP	68	1.15	3.13	89.5	16.404	575	9
		1200	213/5T	00312ET3E213T-S	983	RSP	142	1.15	4.17	89.5	19.291	208-230/460	9
		1200	213/5T	00312ET3E213T-W22	1,129	N1	152	1.25	4.41	89.5	19.517	208-230/460	
		1200	213/5T	00312ET3ERS213T	983	RSP	136	1.15	4.41	89.5	20.257	208-230/460	9
		1200	213/5T	00312ET3H213T-S	983	RSP	142	1.15	3.34	89.5	19.291	575	9
		1200	213/5T	00312ET3H213T-W22	1,129	N1	149	1.25	3.53	89.5	19.517	575	
		1200	213/5T	00312ET3HRS213T	983	RSP	137	1.15	3.53	89.5	20.257	575	9
		900	213/5T	00309EP3E215T-W22	1,609	W1	180	1.25	4.33	84.0	19.517	208-230/460	30
		900	213/5T	00309ET3E215T-W22	2,115	N1	188	1.25	4.56	85.5	19.517	208-230/460	

Continued on next page

Refer to electrical and mechanical data sections for additional technical information. Please refer to back cover for description of "NOTES"

For detailed specifications, data sheets, drawings and performance curves visit http://catalog.wegelectric.com

Data subject to change without notice.

TEFC – Foot Mount *continued*

HP	kW	RPM	NEMA Frame	Catalog Number	List Price	Mult. Symbol	Approx. Shipping Weight (lbs)	Service Factor	FL Amps @ High	FL. Eff (%)	"C" Dimension (in)	Voltage (V)	Notes
5	3.7	3600	182/4T	00536ET3E184T-S	760	RSP	86	1.15	5.90	88.5	17.894	208-230/460	9
		3600	182/4T	00536ET3E184T-W22	873	N1	109	1.25	5.90	88.5	15.860	208-230/460	
		3600	182/4T	00536ET3ERS184T	760	RSP	95	1.15	5.96	89.5	16.404	208-230/460	9
		3600	182/4T	00536ET3H184T-S	760	RSP	86	1.15	4.72	88.5	17.894	575	9
		3600	182/4T	00536ET3H184T-W22	873	N1	106	1.25	4.72	88.5	15.860	575	
		3600	182/4T	00536ET3HRS184T	760	RSP	95	1.15	4.77	89.5	16.404	575	9
		1800	182/4T	00518ET3E184T-S	672	RSP	79	1.15	6.49	89.5	17.894	208-230/460	9
		1800	182/4T	00518ET3E184T-W22	772	N1	105	1.25	6.45	89.5	15.860	208-230/460	
		1800	182/4T	00518ET3ERS184T	672	RSP	91	1.15	6.40	89.5	16.404	208-230/460	9
		1800	182/4T	00518ET3H184T-S	672	RSP	79	1.15	5.19	89.5	17.894	575	9
		1800	182/4T	00518ET3H184T-W22	772	N1	331	1.25	5.16	89.5	15.860	575	
		1800	182/4T	00518ET3HRS184T	672	RSP	91	1.15	5.12	89.5	16.404	575	9
		1800	182/4T	00518ET3P184T-W22	772	N1	106	1.25	14.8	89.5	15.860	200	
		1200	213/5T	00512ET3E215T-S	1,160	RSP	156	1.15	6.74	89.5	20.079	208-230/460	9
		1200	213/5T	00512ET3E215T-W22	1,332	N1	179	1.25	6.83	89.5	19.517	208-230/460	
		1200	213/5T	00512ET3ERS215T	1,160	RSP	152	1.15	6.83	89.5	20.257	208-230/460	9
		1200	213/5T	00512ET3H215T-S	1,160	RSP	156	1.15	5.39	89.5	20.079	575	9
		1200	213/5T	00512ET3H215T-W22	1,332	N1	177	1.25	5.46	89.5	19.517	575	
		1200	213/5T	00512ET3HRS215T	1,160	RSP	153	1.15	5.46	89.5	20.257	575	9
		900	254/6T	00509EP3E254T-W22	2,703	W1	268	1.25	7.76	85.5	24.945	208-230/460	30
		900	254/6T	00509EP3H254T-W22	2,703	W1	253	1.25	6.21	85.5	24.945	575	30
		900	254/6T	00509ET3E254T-W22	3,301	N1	284	1.25	7.58	87.5	24.945	208-230/460	

Continued on next page

Refer to electrical and mechanical data sections for additional technical information. Please refer to back cover for description of “NOTES”

For detailed specifications, data sheets, drawings and performance curves visit http://catalog.wegelectric.com

TEFC – Foot Mount *continued*

HP	kW	RPM	NEMA Frame	Catalog Number	List Price	Mult. Symbol	Approx. Shipping Weight (lbs)	Service Factor	FL Amps @ High	FL. Eff (%)	"C" Dimension (in)	Voltage (V)	Notes
7.5	5.5	3600	182/4T	00736ET3E184T-W22	1,074	N1	107	1.25	8.76	89.5	15.860	208-230/460	
		3600	213/5T	00736ET3E213T-S	980	RSP	144	1.15	8.67	89.5	20.079	208-230/460	9
		3600	213/5T	00736ET3E213T-W22	1,125	N1	155	1.25	8.76	89.5	19.517	208-230/460	
		3600	213/5T	00736ET3ERS213T	980	RSP	141	1.15	8.63	91.0	20.257	208-230/460	9
		3600	213/5T	00736ET3H213T-S	980	RSP	144	1.15	6.93	89.5	20.079	575	9
		3600	213/5T	00736ET3H213T-W22	1,125	N1	155	1.25	7.01	89.5	19.517	575	
		3600	213/5T	00736ET3HRS213T	980	RSP	141	1.15	6.90	91.0	20.257	575	9
		1800	213/5T	00718ET3E213T-S	948	RSP	131	1.15	9.07	91.7	18.898	208-230/460	9
		1800	213/5T	00718ET3E213T-W22	1,089	N1	169	1.25	9.00	91.7	19.517	208-230/460	
		1800	213/5T	00718ET3ERS213T	948	RSP	148	1.15	9.29	91.7	20.257	208-230/460	9
		1800	213/5T	00718ET3H213T-S	948	RSP	131	1.15	7.26	91.7	18.898	575	9
		1800	213/5T	00718ET3H213T-W22	1,089	N1	167	1.25	7.20	91.7	19.517	575	
		1800	213/5T	00718ET3HRS213T	948	RSP	148	1.15	7.43	91.7	20.257	575	9
		1800	213/5T	00718ET3P213T-W22	1,089	N1	167	1.25	20.7	91.7	19.517	200	
		1200	254/6T	00712ET3E254T-S	1,799	RSP	248	1.15	9.98	91	22.559	208-230/460	9
		1200	254/6T	00712ET3E254T-W22	2,065	N1	292	1.25	9.48	91.0	24.945	208-230/460	
		1200	254/6T	00712ET3ERS254T	1,799	RSP	257	1.15	9.73	91.0	24.925	208-230/460	9
		1200	254/6T	00712ET3H254T-S	1,799	RSP	248	1.15	7.99	91	22.559	575	9
		1200	254/6T	00712ET3H254T-W22	2,065	N1	292	1.25	7.58	91.0	24.945	575	
		1200	254/6T	00712ET3HRS254T	1,799	RSP	255	1.15	7.78	91.0	24.925	575	9
		900	254/6T	00709EP3E256T-W22	2,856	W1	297	1.25	11.5	85.5	24.945	208-230/460	30
		900	254/6T	00709ET3E256T-W22	3,658	N1	313	1.25	11.1	87.5	24.945	208-230/460	

Continued on next page

Refer to electrical and mechanical data sections for additional technical information. Please refer to back cover for description of "NOTES"

For detailed specifications, data sheets, drawings and performance curves visit http://catalog.wegelectric.com

Data subject to change without notice.

TEFC – Foot Mount *continued*

HP	kW	RPM	NEMA Frame	Catalog Number	List Price	Mult. Symbol	Approx. Shipping Weight (lbs)	Service Factor	FL Amps @ High	FL. Eff (%)	"C" Dimension (in)	Voltage (V)	Notes
		3600	213/5T	01036ET3E215T-S	1,160	RSP	173	1.15	11.5	90.2	21.654	208-230/460	9
		3600	213/5T	01036ET3E215T-W22	1,332	N1	183	1.25	11.6	90.2	19.517	208-230/460	
		3600	213/5T	01036ET3ERS215T	1,160	RSP	164	1.15	11.5	91.7	20.257	208-230/460	9
		3600	213/5T	01036ET3H215T-S	1,160	RSP	173	1.15	9.20	90.2	21.654	575	9
		3600	213/5T	01036ET3H215T-W22	1,332	N1	182	1.25	9.28	90.2	19.517	575	
		3600	213/5T	01036ET3HRS215T	1,160	RSP	159	1.15	9.20	91.7	20.257	575	9
		1800	213/5T	01018ET3E215T-S	1,110	RSP	142	1.15	12.2	91.7	19.291	208-230/460	9
		1800	213/5T	01018ET3E215T-W22	1,273	N1	192	1.25	12.4	91.7	19.517	208-230/460	
		1800	213/5T	01018ET3ERS215T	1,110	RSP	160	1.15	12.7	91.7	20.257	208-230/460	9
		1800	213/5T	01018ET3H215T-S	1,110	RSP	142	1.15	9.80	91.7	19.291	575	9
10	7.5	1800	213/5T	01018ET3H215T-W22	1,273	N1	192	1.25	9.92	91.7	19.517	575	
		1800	213/5T	01018ET3HRS215T	1,110	RSP	160	1.15	10.2	91.7	20.257	575	9
		1800	213/5T	01018ET3P215T-W22	1,273	N1	192	1.25	28.5	91.7	19.517	200	
		1200	254/6T	01012ET3E256T-S	2,088	RSP	277	1.15	13.8	91	23.346	208-230/460	9
		1200	254/6T	01012ET3E256T-W22	2,396	N1	321	1.25	12.9	91.0	24.945	208-230/460	
		1200	254/6T	01012ET3ERS256T	2,088	RSP	277	1.15	13.3	91.0	24.925	208-230/460	9
		1200	254/6T	01012ET3H256T-S	2,088	RSP	277	1.15	11.0	91	23.346	575	9
		1200	254/6T	01012ET3H256T-W22	2,396	N1	320	1.25	10.3	91.0	24.945	575	
		1200	254/6T	01012ET3HRS256T	2,088	RSP	276	1.15	10.6	91.0	24.925	575	9
		900	284/6T	01009EP3E284T-W22	3,786	W1	380	1.25	13.0	88.5	27.929	208-230/460	30
		900	284/6T	01009ET3E284T-W22	4,634	N1	362	1.25	13.4	90.2	27.929	208-230/460	
		3600	213/5T	01536ET3E215T-W22	1,697	N1	194	1.25	17.0	91.0	19.517	208-230/460	
		3600	254/6T	01536ET3E254T-S	1,589	RSP	220	1.15	17.4	91	22.559	208-230/460	9
		3600	254/6T	01536ET3E254T-W22	1,824	N1	279	1.25	17.2	91.0	24.945	208-230/460	
		3600	254/6T	01536ET3ERS254T	1,589	RSP	229	1.15	16.9	91.7	24.925	208-230/460	9
		3600	254/6T	01536ET3H254T-S	1,589	RSP	220	1.15	14.0	91	22.559	575	9
		3600	254/6T	01536ET3H254T-W22	1,824	N1	279	1.25	13.8	91.0	24.945	575	
		3600	254/6T	01536ET3HRS254T	1,589	RSP	228	1.15	13.5	91.7	24.925	575	9
		1800	254/6T	01518ET3E254T-S	1,610	RSP	242	1.15	18.2	92.4	22.559	208-230/460	9
		1800	254/6T	01518ET3E254T-W22	1,848	N1	333	1.25	18.0	92.4	24.945	208-230/460	
		1800	254/6T	01518ET3ERS254T	1,610	RSP	254	1.15	18.0	92.4	24.925	208-230/460	9
15	11	1800	254/6T	01518ET3H254T-S	1,610	RSP	242	1.15	14.6	92.4	22.559	575	9
		1800	254/6T	01518ET3H254T-W22	1,848	N1	327	1.25	14.4	92.4	24.945	575	
		1800	254/6T	01518ET3HRS254T	1,610	RSP	254	1.15	14.4	92.4	24.925	575	9
		1800	254/6T	01518ET3P254T-W22	1,848	N1	327	1.25	41.4	92.4	24.945	200	
		1200	284/6TS	01512ET3E284TS-W22	3,291	N1	360	1.25	17.9	91.7	26.557	208-230/460	
		1200	284/6T	01512ET3E284T-W22	3,291	N1	402	1.25	17.9	91.7	27.929	208-230/460	
		1200	284/6T	01512ET3H284T-W22	3,291	N1	401	1.25	14.3	91.7	27.929	575	
		900	284/6T	01509EP3E286T-W22	4,291	W1	432	1.25	19.0	88.5	27.929	208-230/460	30
		900	284/6T	01509ET3E286T-W22	5,368	N1	431	1.25	19.4	90.2	27.929	208-230/460	
		900	284/6T	01509ET3H286T-W22	5,368	N1	431	1.25	15.5	90.2	27.929	575	

Continued on next page

Refer to electrical and mechanical data sections for additional technical information. Please refer to back cover for description of "NOTES"

For detailed specifications, data sheets, drawings and performance curves visit http://catalog.wegelectric.com

TEFC – Foot Mount *continued*

HP	kW	RPM	NEMA Frame	Catalog Number	List Price	Mult. Symbol	Approx. Shipping Weight (lbs)	Service Factor	FL Amps @ High	FL. Eff (%)	"C" Dimension (in)	Voltage (V)	Notes
20	15	3600	254/6T	02036ET3E256T-S	2,076	RSP	256	1.15	22.7	91	22.559	208-230/460	9
		3600	254/6T	02036ET3E256T-W22	2,382	N1	316	1.25	23.2	91.0	24.945	208-230/460	
		3600	254/6T	02036ET3ERS256T	2,076	RSP	261	1.15	22.9	92.4	24.925	208-230/460	9
		3600	254/6T	02036ET3H256T-S	2,076	RSP	256	1.15	18.2	91	22.559	575	9
		3600	254/6T	02036ET3H256T-W22	2,382	N1	316	1.25	18.6	91.0	24.945	575	
		3600	254/6T	02036ET3HRS256T	2,076	RSP	260	1.15	18.3	92.4	24.925	575	9
		1800	254/6T	02018ET3E256T-S	1,918	RSP	271	1.15	24.5	92.4	23.346	208-230/460	9
		1800	254/6T	02018ET3E256T-W22	2,201	N1	363	1.25	24.1	93.0	24.945	208-230/460	
		1800	254/6T	02018ET3ERS256T	1,918	RSP	280	1.15	24.4	93.0	24.925	208-230/460	9
		1800	254/6T	02018ET3H256T-S	1,918	RSP	271	1.15	19.6	92.4	23.346	575	9
		1800	254/6T	02018ET3H256T-W22	2,201	N1	363	1.25	19.3	93.0	24.945	575	
		1800	254/6T	02018ET3HRS256T	1,918	RSP	280	1.15	19.5	93.0	24.925	575	9
		1800	254/6T	02018ET3P256T-W22	2,201	N1	364	1.25	55.4	93.0	24.945	200	
		1200	284/6T	02012ET3E286T-W22	3,962	N1	450	1.25	24.2	91.7	27.929	208-230/460	
		1200	284/6T	02012ET3H286T-W22	3,962	N1	449	1.25	19.4	91.7	27.929	575	
		900	324/6T	02009EP3E324T-W22	5,277	W1	510	1.25	28.4	89.5	31.116	208-230/460	30
		900	324/6T	02009ET3E324T-W22	6,339	N1	532	1.25	28.3	91.0	31.116	208-230/460	
		900	324/6T	02009ET3H324T-W22	6,339	N1	531	1.25	22.6	91.0	31.116	575	
25	18.5	3600	284/6TS	02536ET3E284TS-W22	2,998	N1	400	1.25	28.5	91.7	26.557	208-230/460	
		3600	284/6TS	02536ET3H284TS-W22	2,998	N1	399	1.25	22.8	91.7	26.557	575	
		1800	284/6TS	02518ET3E284TS-W22	2,743	N1	425	1.25	29.5	93.6	26.557	208-230/460	
		1800	284/6T	02518ET3E284T-W22	2,743	N1	433	1.25	29.5	93.6	27.929	208-230/460	
		1800	284/6T	02518ET3H284T-W22	2,743	N1	429	1.25	23.6	93.6	27.929	575	
		1200	324/6T	02512ET3E324T-W22	4,737	N1	569	1.25	30.4	93.0	31.116	208-230/460	
		1200	324/6T	02512ET3H324T-W22	4,737	N1	568	1.25	24.3	93.0	31.116	575	
		900	324/6T	02509EP3E326T-W22	5,924	W1	565	1.25	35.5	89.5	31.116	208-230/460	30
		900	324/6T	02509ET3E326T-W22	7,315	N1	590	1.25	35.9	91.0	31.116	208-230/460	
30	22	3600	284/6TS	03036ET3E286TS-W22	3,561	N1	430	1.25	33.8	91.7	26.557	208-230/460	
		3600	284/6TS	03036ET3H286TS-W22	3,561	N1	430	1.25	27.0	91.7	26.557	575	
		1800	284/6TS	03018ET3E286TS-W22	3,223	N1	479	1.25	35.1	93.6	27.929	208-230/460	
		1800	284/6T	03018ET3E286T-W22	3,223	N1	482	1.25	35.1	93.6	27.929	208-230/460	
		1800	284/6T	03018ET3H286T-W22	3,223	N1	480	1.25	28.1	93.6	27.929	575	
		1200	324/6T	03012ET3E326T-W22	5,273	N1	621	1.25	35.8	93.0	31.116	208-230/460	
		1200	324/6T	03012ET3H326T-W22	5,273	N1	619	1.25	28.6	93.0	31.116	575	
		900	364/5T	03009EP3E364T-W22	8,446	W1	878	1.25	37.0	91.0	34.251	208-230/460	30
		900	364/5T	03009ET3E364T-W22	11,215	N1	905	1.25	37.0	92.4	34.251	208-230/460	

Continued on next page

Refer to electrical and mechanical data sections for additional technical information. Please refer to back cover for description of "NOTES"

For detailed specifications, data sheets, drawings and performance curves visit http://catalog.wegelectric.com

Data subject to change without notice.

TEFC – Foot Mount *continued*

HP	kW	RPM	NEMA Frame	Catalog Number	List Price	Mult. Symbol	Approx. Shipping Weight (lbs)	Service Factor	FL Amps @ High	FL. Eff (%)	"C" Dimension (in)	Voltage (V)	Notes
40	30	3600	324/6TS	04036ET3E324TS-W22	4,725	N1	572	1.25	45.8	92.4	29.616	208-230/460	
		3600	324/6TS	04036ET3H324TS-W22	4,725	N1	564	1.25	36.6	92.4	29.616	575	
		1800	324/6T	04018ET3E324TS-W22	4,178	N1	435	1.25	48.2	94.1	31.116	208-230/460	
		1800	324/6T	04018ET3E324T-W22	4,178	N1	595	1.25	48.2	94.1	31.116	208-230/460	
		1800	324/6T	04018ET3H324T-W22	4,178	N1	595	1.25	38.6	94.1	31.116	575	
		1800	324/6T	04018ET3P324T-W22	4,178	N1	564	1.25	111	94.1	31.116	200	
		1200	364/5T	04012ET3E364T-W22	7,284	N1	950	1.25	46.5	94.1	34.251	208-230/460	
		1200	364/5T	04012ET3H364T-W22	7,284	N1	879	1.25	37.2	94.1	34.251	575	
		900	364/5T	04009EP3E365T-W22	9,973	W1	937	1.25	49.9	91.0	39.730	208-230/460	30
		900	364/5T	04009ET3E365T-W22	12,194	N1	985	1.25	50.0	92.4	34.251	208-230/460	
50	37	3600	324/6TS	05036ET3E326TS-W22	5,316	N1	605	1.25	56.1	93.0	29.616	208-230/460	
		3600	324/6TS	05036ET3H326TS-W22	5,316	N1	597	1.25	44.9	93.0	29.616	575	
		1800	324/6TS	05018ET3E326TS-W22	5,100	N1	462	1.25	59.2	94.5	29.616	208-230/460	
		1800	324/6T	05018ET3E326T-W22	5,100	N1	634	1.25	59.2	94.5	31.116	208-230/460	
		1800	324/6T	05018ET3H326T-W22	5,100	N1	461	1.25	47.4	94.5	31.116	575	
		1200	364/5T	05012ET3E365T-W22	8,518	N1	1009	1.25	57.4	94.1	34.251	208-230/460	
		1200	364/5T	05012ET3H365T-W22	8,518	N1	989	1.25	45.9	94.1	34.251	575	
		900	404/5T	05009EP3E404T-W22	11,339	W1	1253	1.25	61.0	91.7	39.730	208-230/460	30
		900	404/5T	05009ET3E404T-W22	17,648	N1	1227	1.25	60.0	93.0	39.730	208-230/460	
60	45	3600	364/5TS	06036ET3E364TS-W22	7,552	N1	954	1.25	67.0	93.6	32.276	208-230/460	
		3600	364/5TS	06036ET3G364TS-W22	7,552	N1	992	1.25	67.0	93.6	32.276	460	
		1800	364/5TS	06018ET3E364TS-W22	7,389	N1	1022	1.25	68.3	95.0	32.276	208-230/460	
		1800	364/5T	06018ET3E364T-W22	7,389	N1	1027	1.25	68.3	95.0	34.251	208-230/460	
		1800	364/5T	06018ET3G364T-W22	7,389	N1	1013	1.25	68.3	95.0	34.251	460	
		1800	364/5T	06018ET3H364T-W22	7,389	N1	1012	1.25	54.6	95.0	34.251	575	
		1200	404/5T	06012ET3E404T-W22	10,497	N1	1213	1.25	69.5	94.5	39.730	208-230/460	
		1200	404/5T	06012ET3ERB404T-W22	10,497	N1	1214	1.25	69.5	94.5	39.730	208-230/460	14
		1200	404/5T	06012ET3G404T-W22	10,497	N1	1213	1.25	69.5	94.5	39.730	460	
		900	404/5T	06009EP3E405T-W22	12,908	W1	1268	1.25	74.2	91.7	39.730	208-230/460	30
		900	404/5T	06009ET3E405T-W22	20,443	N1	1281	1.25	73.0	93.0	39.730	208-230/460	

Continued on next page

Refer to electrical and mechanical data sections for additional technical information. Please refer to back cover for description of "NOTES"

For detailed specifications, data sheets, drawings and performance curves visit http://catalog.wegelectric.com

TEFC – Foot Mount *continued*

HP	kW	RPM	NEMA Frame	Catalog Number	List Price	Mult. Symbol	Approx. Shipping Weight (lbs)	Service Factor	FL Amps @ High	FL. Eff (%)	"C" Dimension (in)	Voltage (V)	Notes
		3600	364/5TS	07536ET3E365TS-W22	9,091	N1	965	1.25	81.9	93.6	32.276	208-230/460	
		3600	364/5TS	07536ET3G365TS-W22	9,091	N1	966	1.25	81.9	93.6	32.276	460	
		1800	364/5TS	07518ET3E365TS-W22	8,705	N1	1039	1.25	84.1	95.4	32.276	208-230/460	
		1800	364/5T	07518ET3E365T-W22	8,705	N1	1044	1.25	84.1	95.4	34.251	208-230/460	
		1800	364/5T	07518ET3G365T-W22	8,705	N1	1045	1.25	84.1	95.4	34.251	460	
		1800	364/5T	07518ET3H365T-W22	8,705	N1	1054	1.25	67.3	95.4	34.251	575	
75	55	1200	404/5T	07512ET3E405T-W22	12,058	N1	882	1.25	84.9	94.5	39.730	208-230/460	
		1200	404/5T	07512ET3ERB405T-W22	12,058	N1	888	1.25	84.9	94.5	39.730	208-230/460	14
		1200	404/5T	07512ET3G405T-W22	12,058	N1	1236	1.25	84.9	94.5	39.730	460	
		1200	404/5T	07512ET3GRB405T-W22	12,058	N1	1210	1.25	84.9	94.5	39.730	460	14
		1200	404/5T	07512ET3H405T-W22	12,058	N1	1478	1.25	67.9	94.5	39.730	575	
		900	444/5T	07509EP3E444T-W22	16,918	W1	1704	1.25	92.8	93.0	44.950	208-230/460	30
		900	444/5T	07509ET3E444T-W22	23,334	N1	1707	1.25	93.0	93.6	44.950	208-230/460	
		3600	404/5TS	10036ET3E405TS-W22	12,002	N1	1193	1.25	110	94.1	36.732	208-230/460	
		3600	404/5TS	10036ET3G405TS-W22	12,002	N1	1182	1.25	110	94.1	36.732	460	
		3600	404/5TS	10036ET3H405TS-W22	12,002	N1	1180	1.25	88.0	94.1	36.732	575	
		1800	404/5TS	10018ET3E405TS-W22	11,689	N1	1267	1.25	111	95.4	36.732	208-230/460	
		1800	404/5T	10018ET3E405T-W22	11,689	N1	1292	1.25	111	95.4	39.730	208-230/460	
		1800	404/5T	10018ET3ERB405T-W22	11,689	N1	1298	1.25	111	95.4	39.730	208-230/460	14
		1800	404/5T	10018ET3G405T-W22	11,689	N1	1278	1.25	111	95.4	39.730	460	
		1800	404/5T	10018ET3GRB405T-W22	11,689	N1	1286	1.25	111	95.4	39.730	460	14
		1800	404/5T	10018ET3H405T-W22	11,689	N1	1281	1.25	88.8	95.4	39.730	575	
100	75	1800	404/5T	10018ET3HRB405T-W22	11,689	N1	1295	1.25	88.8	95.4	39.730	575	14
		1200	444/5T	10012ET3E444T-W22	15,631	N1	1885	1.25	121	95.0	44.950	208-230/460	
		1200	444/5T	10012ET3ERB444T-W22	15,631	N1	1903	1.25	121	95.0	44.950	208-230/460	14
		1200	444/5T	10012ET3G444T-W22	15,631	N1	1883	1.25	121	95.0	44.950	460	
		1200	444/5T	10012ET3GRB444T-W22	15,631	N1	1901	1.25	121	95.0	44.950	460	14
		1200	444/5T	10012ET3H444T-W22	15,631	N1	1883	1.25	96.8	95.0	44.950	575	
		900	444/5T	10009EP3E445T-W22	21,909	W1	1896	1.25	127	93.0	44.950	208-230/460	30
		900	444/5T	10009EP3G445T-W22	21,909	W1	1896	1.25	127	93.0	44.950	460	30
		900	444/5T	10009ET3E445T-W22	26,988	N1	1900	1.25	127	94.1	44.950	208-230/460	
		900	444/5T	10009ET3G445T-W22	26,988	N1	1866	1.25	127	94.1	44.950	460	

Continued on next page

Refer to electrical and mechanical data sections for additional technical information. Please refer to back cover for description of "NOTES"

For detailed specifications, data sheets, drawings and performance curves visit http://catalog.wegelectric.com

Data subject to change without notice.

TEFC – Foot Mount *continued*

HP	kW	RPM	NEMA Frame	Catalog Number	List Price	Mult. Symbol	Approx. Shipping Weight (lbs)	Service Factor	FL Amps @ High	FL. Eff (%)	"C" Dimension (in)	Voltage (V)	Notes
		3600	444/5TS	12536ET3E444TS-W22	15,350	N1	1836	1.15	134	95.0	41.200	208-230/460	
		3600	444/5TS	12536ET3G444TS-W22	15,350	N1	1835	1.15	134	95.0	41.200	460	
		3600	444/5TS	12536ET3H444TS-W22	15,350	N1	1821	1.15	107	95.0	41.200	575	
		1800	444/5TS	12518ET3E444TS-W22	14,748	N1	1796	1.15	139	95.4	41.200	208-230/460	
		1800	444/5T	12518ET3E444T-W22	14,748	N1	1824	1.15	139	95.4	44.950	208-230/460	
		1800	444/5T	12518ET3ERB444T-W22	14,748	N1	1862	1.15	139	95.4	44.950	208-230/460	14
		1800	444/5T	12518ET3G444T-W22	14,748	N1	1847	1.15	139	95.4	44.950	460	
		1800	444/5T	12518ET3GRB444T-W22	14,748	N1	1866	1.15	139	95.4	44.950	460	14
125	90	1800	444/5T	12518ET3H444T-W22	14,748	N1	1858	1.15	111	95.4	44.950	575	
		1800	444/5T	12518ET3Q444T-W22	14,748	N1	1754	1.15	139	95.4	44.950	460	
		1200	444/5T	12512ET3E445T-W22	17,947	N1	2004	1.15	143	95.0	44.950	208-230/460	
		1200	444/5T	12512ET3ERB445T-W22	17,947	N1	2041	1.15	143	95.0	44.950	208-230/460	14
		1200	444/5T	12512ET3G445T-W22	17,947	N1	2022	1.15	143	95.0	44.950	460	
		1200	444/5T	12512ET3GRB445T-W22	17,947	N1	2038	1.15	143	95.0	44.950	460	14
		900	445/7T	12509EP3E447T-W22	25,308	W1	2248	1.15	151	93.6	48.701	208-230/460	30
		900	445/7T	12509EP3G447T-W22	25,308	W1	2248	1.15	151	93.6	48.701	460	30
		900	445/7T	12509ET3G447T-W22	28,175	N1	2250	1.15	151	94.5	48.701	460	
		3600	444/5TS	15036ET3E445TS-W22	18,882	N1	1941	1.15	161	95.0	41.200	208-230/460	
		3600	444/5TS	15036ET3G445TS-W22	18,882	N1	1943	1.15	161	95.0	41.200	460	
		3600	444/5TS	15036ET3Q445TS-W22	18,882	N1	1858	1.15	161	95.0	41.200	460	
		1800	444/5T	15018ET3E445T-W22	17,420	N1	1924	1.15	170	95.8	44.950	208-230/460	
		1800	444/5TS	15018ET3G445TS-W22	17,420	N1	1869	1.15	170	95.8	41.200	460	
		1800	444/5T	15018ET3G445T-W22	17,420	N1	1917	1.15	170	95.8	44.950	460	
		1800	444/5T	15018ET3GRB445T-W22	17,420	N1	1935	1.15	170	95.8	44.950	460	14
150	110	1800	444/5T	15018ET3H445T-W22	17,420	N1	1933	1.15	136	95.8	44.950	575	
		1800	444/5T	15018ET3HRB445T-W22	17,420	N1	1952	1.15	136	95.8	44.950	575	14
		1800	444/5T	15018ET3Q445T-W22	17,420	N1	1841	1.15	170	95.8	44.950	460	
		1200	445/7T	15012ET3E447T-W22	20,639	N1	2529	1.15	176	95.8	48.701	208-230/460	
		1200	445/7T	15012ET3G447T-W22	20,639	N1	2484	1.15	176	95.8	48.701	460	
		1200	445/7T	15012ET3GRB447T-W22	20,639	N1	2502	1.15	176	95.8	48.701	460	14
		900	447/9T	15009EP3G449T-W22	28,688	W1	2500	1.15	184	93.6	56.338	460	30
		900	447/9T	15009ET3G449T-W22	30,677	N1	3803	1.15	185	94.5	56.338	460	

Continued on next page

Refer to electrical and mechanical data sections for additional technical information. Please refer to back cover for description of "NOTES"

For detailed specifications, data sheets, drawings and performance curves visit http://catalog.wegelectric.com

TEFC – Foot Mount *continued*

HP	kW	RPM	NEMA Frame	Catalog Number	List Price	Mult. Symbol	Approx. Shipping Weight (lbs)	Service Factor	FL Amps @ High	FL. Eff (%)	"C" Dimension (in)	Voltage (V)	Notes
200	150	3600	445/7TS	20036ET3E447TS-W22	23,562	N1	1824	1.15	219	95.4	44.951	208-230/460	
		3600	445/7TS	20036ET3G447TS-W22	23,562	N1	2248	1.15	219	95.4	44.951	460	
		3600	504/5S	20036ET3G504S-W22	23,562	N1	2072	1.15	222	95.4	48.215	460	
		1800	445/7T	20018ET3E447T-W22	21,098	N1	2342	1.15	230	96.2	48.701	208-230/460	
		1800	445/7T	20018ET3G447TS-W22	21,098	N1	2293	1.15	230	96.2	48.701	460	
		1800	445/7T	20018ET3G447T-W22	21,098	N1	2327	1.15	230	96.2	48.701	460	
		1800	504/5	20018ET3G504-W22	21,098	N1	2063	1.15	228	96.2	54.095	460	
		1800	445/7T	20018ET3GRB447T-W22	21,098	N1	2346	1.15	230	96.2	48.701	460	14
		1800	445/7T	20018ET3H447T-W22	21,098	N1	2333	1.15	184	96.2	48.701	575	
		1800	445/7T	20018ET3HRB447T-W22	21,098	N1	1850	1.15	184	96.2	48.701	575	14
		1200	447/9T	20012ET3E449T-W22	25,255	N1	2495	1.15	237	95.8	56.338	208-230/460	
		1200	445/7T	20012ET3G447T-W22	25,133	N1	2704	1.15	237	95.8	48.701	460	
		1200	447/9T	20012ET3G449T-W22	25,255	N1	2933	1.15	237	95.8	56.338	460	
		1200	504/5	20012ET3G505-W22	25,255	N1	2467	1.15	237	95.8	54.095	460	
		1200	445/7T	20012ET3GRB447T-W22	25,133	N1	2722	1.15	237	95.8	48.701	460	14
		1200	447/9T	20012ET3GRB449T-W22	25,255	N1	2954	1.15	237	95.8	56.338	460	14
		900	447/9T	20009EP3G449T-W22	43,236	W1	3509	1.15	252	94.5	56.338	460	30
		900	447/9T	20009ET3G449T-W22	49,899	N1	4212	1.15	254	95.0	56.338	460	
250	185	3600	445/7TS	25036EP3E447TS-W22	21,318	W1	2172	1.15	270	95.4	44.951	208-230/460	30
		3600	447/9TS	25036EP3E449TS-W22	24,878	W1	2172	1.15	270	95.4	52.588	208-230/460	30
		3600	445/7TS	25036EP3G447TS-W22	21,318	W1	2496	1.15	270	95.4	44.951	460	30
		3600	447/9TS	25036EP3G449TS-W22	24,878	W1	2548	1.15	270	95.4	52.588	460	30
		3600	445/7TS	25036EP3Q447TS-W22	21,318	W1	2275	1.15	270	95.4	44.951	460	30
		3600	447/9TS	25036EP3Q449TS-W22	24,878	W1	2275	1.15	270	95.4	52.588	460	30
		3600	445/7TS	25036ET3G447TS-W22	29,846	N1	2479	1.15	266	95.8	44.951	460	
		3600	447/9TS	25036ET3G449TS-W22	33,173	N1	2556	1.15	266	95.8	52.588	460	
		1800	445/7T	25018EP3G447T-W22	23,492	W1	2413	1.15	283	95.4	48.701	460	30
		1800	447/9T	25018EP3G449T-W22	25,315	W1	2641	1.15	283	95.4	56.338	460	30
		1800	445/7T	25018EP3GRB447T-W22	23,435	W1	2438	1.15	283	95.4	48.701	460	14;30
		1800	447/9T	25018EP3GRB449T-W22	25,315	W1	2655	1.15	283	95.4	56.338	460	14;30
		1800	445/7T	25018ET3G447T-W22	26,716	N1	2361	1.15	281	96.2	48.701	460	
		1800	447/9T	25018ET3G449T-W22	26,803	N1	2652	1.15	281	96.2	56.338	460	
		1800	445/7T	25018ET3GRB447T-W22	26,716	N1	2379	1.15	281	96.2	48.701	460	14
		1800	447/9T	25018ET3GRB449T-W22	26,803	N1	2682	1.15	281	96.2	56.338	460	14
		1800	445/7T	25018ET3HRB447T-W22	26,716	N1	2414	1.15	225	96.2	48.701	575	14
		1200	447/9T	25012EP3G449T-W22	32,322	W1	4002	1.15	291	95.0	56.338	460	30
		1200	447/9T	25012EP3GRB449T-W22	32,322	W1	4002	1.15	291	95.0	56.338	460	14;30
		1200	447/9T	25012ET3E449T-W22	35,555	N1	3966	1.15	292	95.8	56.338	208-230/460	
		1200	447/9T	25012ET3G449T-W22	35,555	N1	2680	1.15	292	95.8	56.338	460	
		1200	586/7	25012ET3G586/7-W22	39,631	N1	3593	1.15	299	95.8	61.902	460	
		1200	447/9T	25012ET3GRB449T-W22	35,555	N1	3104	1.15	292	95.8	56.338	460	14
		900	L447/9T	25009ET3G449T-W22	56,168	N1	4639	1.15	308	95.4	57.181	460	

Continued on next page

Refer to electrical and mechanical data sections for additional technical information. Please refer to back cover for description of "NOTES"

For detailed specifications, data sheets, drawings and performance curves visit http://catalog.wegelectric.com

Data subject to change without notice.

TEFC – Foot Mount *continued*

HP	kW	RPM	NEMA Frame	Catalog Number	List Price	Mult. Symbol	Approx. Shipping Weight (lbs)	Service Factor	FL Amps @ High	FL. Eff (%)	"C" Dimension (in)	Voltage (V)	Notes
300	220	3600	447/9TS	30036EP3G449TS-W22	33,348	W1	2821	1.15	322	95.4	52.588	460	30
		3600	447/9TS	30036ET3G449TS-W22	38,269	N1	2817	1.15	320	95.8	52.588	460	
		1800	447/9T	30018EP3G449T-W22	29,765	W1	2578	1.15	337	95.4	56.338	460	30
		1800	447/9T	30018EP3GRB449T-W22	29,765	W1	2857	1.15	337	95.4	56.338	460	14;30
		1800	447/9T	30018EP3H449T-W22	29,765	W1	2850	1.15	270	95.4	56.338	575	30
		1800	447/9TS	30018ET3G449TS-W22	31,384	N1	2665	1.15	330	96.2	52.588	460	
		1800	447/9T	30018ET3G449T-W22	31,384	N1	2566	1.15	330	96.2	56.338	460	
		1800	447/9T	30018ET3GRB449T-W22	31,384	N1	2587	1.15	330	96.2	56.338	460	14
		1200	447/9T	30012EP3G449T-W22	34,943	W1	3127	1.15	350	95.0	56.338	460	30
		1200	447/9T	30012EP3GRB449T-W22	34,943	W1	4487	1.15	350	95.0	56.338	460	14;30
		1200	447/9T	30012ET3G449T-W22	38,437	N1	3127	1.15	347	95.8	56.338	460	
		1200	586/7	30012ET3G586/7-W22	44,301	N1	3962	1.15	356	95.8	61.902	460	
		1200	447/9T	30012ET3GRB449T-W22	38,437	N1	3146	1.15	347	95.8	56.338	460	14
		900	L447/9T	30009ET3G449T-W22	58,655	N1	3755	1.15	371	95.4	57.181	460	
350	260	3600	447/9TS	35036EP3G449TS-W22	36,622	W1	2982	1.15	378	95.8	52.588	460	30
		3600	447/9TS	35036ET3G449TS-W22	43,805	N1	2972	1.15	377	96.2	52.588	460	
		1800	447/9T	35018EP3G449T-W22	36,337	W1	2821	1.15	396	95.8	56.338	460	30
		1800	447/9T	35018EP3GRB449T-W22	36,337	W1	2840	1.15	396	95.8	56.338	460	14;30
		1800	447/9T	35018ET3G449TS-W22	36,517	N1	2974	1.15	394	96.2	56.338	460	
		1800	447/9T	35018ET3G449T-W22	36,517	N1	3152	1.15	394	96.2	56.338	460	
		1800	447/9T	35018ET3GRB449T-W22	36,517	N1	3737	1.15	394	96.2	56.338	460	14
		1200	586/7	35012EP3G586/7-W22	47,249	W1	4185	1.15	422	95.4	61.902	460	30
		1200	L447/9T	35012ET3G449T-W22	47,633	N1	3709	1.15	415	95.8	57.181	460	
		1200	L447/9T	35012ET3GRB449T-W22	47,633	N1	3724	1.15	415	95.8	57.181	460	14
		900	586/7	35009EP3G586/7-W22	65,217	W1	4966	1.00	429	95.0	61.902	460	1;30
		900	586/7	35009ET3G586/7-W22	64,873	N1	5028	1.00	426	95.8	61.902	460	1
400	300	3600	L447/9TS	40036ET3G449TS-W22	44,605	N1	3292	1.15	432	95.8	53.431	460	
		1800	L447/9TS	40018ET3G449TS-W22	43,805	N1	3276	1.15	455	96.2	53.431	460	
		1800	L447/9T	40018ET3G449T-W22	43,805	N1	3320	1.15	455	96.2	57.181	460	
		1800	L447/9T	40018ET3GRB449T-W22	43,805	N1	4686	1.15	455	96.2	57.181	460	14
		1800	L447/9T	40018ET3H449T-W22	43,805	N1	3316	1.15	364	96.2	57.181	575	
		1200	L447/9T	40012ET3G449T-W22	52,307	N1	3734	1.15	477	95.8	57.181	460	
		1200	586/7	40012ET3G586/7-W22	56,201	N1	4581	1.15	483	96.2	61.902	460	
		1200	L447/9T	40012ET3GRB449T-W22	52,307	N1	3739	1.15	477	95.8	57.181	460	14
		900	588/9	40009ET3G588/9-W22	66,123	N1	3308	1.00	498	95.7	69.381	460	1

Continued on next page

Refer to electrical and mechanical data sections for additional technical information. Please refer to back cover for description of "NOTES"

For detailed specifications, data sheets, drawings and performance curves visit http://catalog.wegelectric.com

TEFC – Foot Mount *continued*

HP	kW	RPM	NEMA Frame	Catalog Number	List Price	Mult. Symbol	Approx. Shipping Weight (lbs)	Service Factor	FL Amps @ High	FL. Eff (%)	"C" Dimension (in)	Voltage (V)	Notes
450	330	3600	L447/9TS	45036ET3G449TS-W22	49,610	N1	3492	1.00	475	95.8	53.431	460	1
		1800	586/7	45018EP3G586/7-W22	46,053	W1	5204	1.15	503	95.8	61.902	460	30
		1800	L447/9T	45018ET3G449T-W22	48,010	N1	3524	1.15	501	96.2	57.181	460	
		1800	L447/9T	45018ET3GRB449T-W22	48,010	N1	3542	1.15	501	96.2	57.181	460	14
		1200	586/7	45012EP3G586/7-W22	56,592	W1	4933	1.00	536	95.4	61.902	460	1;30
		1200	586/7	45012EP3GRB586/7-W22	56,592	W1	5248	1.00	536	95.4	61.902	460	1;14;30
		1200	586/7	45012EP3H586/7-W22	56,592	W1	5248	1.00	429	95.4	61.902	575	1;30
		1200	586/7	45012ET3G586/7-W22	62,251	N1	4877	1.00	532	96.2	61.902	460	1
		1200	586/7	45012ET3GRB586/7-W22	62,251	N1	5248	1.00	532	96.2	61.902	460	1;14
		900	588/9	45009ET3G588/9-W22	68,715	N1	5189	1.00	554	95.8	69.381	460	1
500	370	3600	586/7S	50036ET3G586/7S-W22	56,305	N1	4571	1.15	530	96.2	55.027	460	
		1800	L447/9T	50018ET3G449T-W22	50,594	N1	3652	1.00	561	96.2	57.181	460	1;19
		1800	L447/9T	50018ET3GRB449T-W22	50,594	N1	5424	1.00	561	96.2	57.181	460	1;14
		1200	586/7	50012ET3G586/7-W22	62,962	N1	4896	1.00	603	96.2	61.902	460	1
600	450	3600	588/9S	60036ET3G588/9S-W22	64,635	N1	5261	1.00	650	96.5	62.506	460	1
		1800	586/7	60018ET3G586/7-W22	60,316	N1	4900	1.00	665	96.5	61.902	460	1
		1200	588/9	60012ET3G588/9-W22	71,374	N1	6000	1.00	743	96.2	69.381	460	1
650	480	3600	588/9S	65036ET3G588/9S-W22	66,835	N1	4805	1.00	685	96.6	62.506	460	1
		1800	588/9	65018ET3G588/9-W22	66,701	N1	3308	1.00	734	96.6	69.381	460	1
700	515	3600	588/9S	70036ET3G588/9S-W22	71,254	N1	5754	1.00	736	96.6	62.506	460	1
		1800	588/9	70018ET3G588/9-W22	71,185	N1	5893	1.00	788	96.6	69.381	460	1
750	550	1800	588/9	75018ET3G588/9-W22	74,025	N1	3308	1.00	840	96.7	69.381	460	1

Refer to electrical and mechanical data sections for additional technical information. Please refer to back cover for description of "NOTES"

For detailed specifications, data sheets, drawings and performance curves visit http://catalog.wegelectric.com

Data subject to change without notice.





TEFC – C-Flange – Foot Mount

HP	kW	RPM	NEMA Frame	Catalog Number	List Price	Mult. Symbol	Approx. Shipping Weight (lbs)	Service Factor	FL Amps @ High	FL. Eff (%)	"C" Dimension (in)	Voltage (V)	Notes
1	0.75	3600	143/5TC	00136ET3E143TC-W22	566	N1	43	1.25	1.43	78.5	13.346	208-230/460	
		1800	143/5TC	00118ET3E143TC-S	484	RSP	43	1.15	1.47	85.5	13.583	208-230/460	9
		1800	143/5TC	00118ET3E143TC-W22	555	N1	49	1.25	1.41	85.5	13.346	208-230/460	
		1800	143/5TC	00118ET3ERS143TC	484	RSP	41	1.15	1.55	85.5	14.095	208-230/460	9
		1800	143/5TC	00118ET3H143TC-W22	555	N1	49	1.25	1.13	85.5	13.346	575	
		1200	143/5TC	00112ET3E145TC-S	554	RSP	43	1.15	1.58	82.5	13.583	208-230/460	9
		1200	143/5TC	00112ET3E145TC-W22	636	N1	56	1.25	1.73	82.5	13.346	208-230/460	
		1200	143/5TC	00112ET3ERS145TC	554	RSP	47	1.15	1.75	82.5	14.095	208-230/460	9
1.5	1.1	3600	143/5TC	00156ET3E143TC-S	497	RSP	39	1.15	1.87	84	13.583	208-230/460	9
		3600	143/5TC	00156ET3E143TC-W22	571	N1	48	1.25	1.91	84.0	13.346	208-230/460	
		3600	143/5TC	00156ET3ERS143TC	497	RSP	40	1.15	1.95	84.0	14.095	208-230/460	9
		3600	143/5TC	00156ET3H143TC-W22	571	N1	45	1.25	1.53	84.0	13.346	575	
		1800	143/5TC	00158ET3E145TC-S	504	RSP	43	1.15	2.02	86.5	13.583	208-230/460	9
		1800	143/5TC	00158ET3E145TC-W22	579	N1	55	1.25	2.02	86.5	13.346	208-230/460	
		1800	143/5TC	00158ET3ERS145TC	504	RSP	49	1.15	2.25	86.5	14.095	208-230/460	9
		1800	143/5TC	00158ET3H145TC-W22	579	N1	57	1.25	1.62	86.5	13.346	575	
		1200	182/4TC	00152ET3E182TC-S	690	RSP	73	1.15	2.22	87.5	16.339	208-230/460	9
		1200	182/4TC	00152ET3E182TC-W22	792	N1	100	1.25	2.39	87.5	15.860	208-230/460	
		1200	182/4TC	00152ET3ERS182TC	690	RSP	90	1.15	2.39	87.5	16.404	208-230/460	9
2	1.5	3600	143/5TC	00236ET3E145TC-S	539	RSP	45	1.15	2.47	85.5	13.976	208-230/460	9
		3600	143/5TC	00236ET3E145TC-W22	619	N1	58	1.25	2.53	85.5	13.346	208-230/460	
		3600	143/5TC	00236ET3ERS145TC	539	RSP	48	1.15	2.50	85.5	14.095	208-230/460	9
		3600	143/5TC	00236ET3H145TC-W22	619	N1	56	1.25	2.02	85.5	13.346	575	
		1800	143/5TC	00218ET3E145TC-S	558	RSP	47	1.15	2.72	86.5	13.976	208-230/460	9
		1800	143/5TC	00218ET3E145TC-W22	640	N1	59	1.25	2.61	86.5	13.346	208-230/460	
		1800	143/5TC	00218ET3ERS145TC	558	RSP	55	1.15	2.85	86.5	14.095	208-230/460	9
		1800	143/5TC	00218ET3H145TC-W22	640	N1	57	1.25	2.09	86.5	13.346	575	
		1200	182/4TC	00212ET3E184TC-S	747	RSP	83	1.15	3.00	88.5	17.126	208-230/460	9
		1200	182/4TC	00212ET3E184TC-W22	857	N1	112	1.25	3.23	88.5	15.860	208-230/460	
		1200	182/4TC	00212ET3ERS184TC	747	RSP	101	1.15	3.22	88.5	16.404	208-230/460	9

Continued on next page

Note: Flanged motors on Cast Iron frame sizes 143/5 to 254/6 have non-NEMA BA dimension. Refer to mechanical section of this catalog for details.

TEFC – C-Flange – Foot Mount *continued*

HP	kW	RPM	NEMA Frame	Catalog Number	List Price	Mult. Symbol	Approx. Shipping Weight (lbs)	Service Factor	FL Amps @ High	FL. Eff (%)	"C" Dimension (in)	Voltage (V)	Notes
3	2.2	3600	182/4TC	00336ET3E182TC-S	698	RSP	71	1.15	3.67	86.5	16.339	208-230/460	9
		3600	182/4TC	00336ET3E182TC-W22	802	N1	103	1.25	3.63	86.5	15.860	208-230/460	
		3600	182/4TC	00336ET3ERS182TC	698	RSP	91	1.15	3.68	87.5	16.404	208-230/460	9
		3600	182/4TC	00336ET3H182TC-W22	802	N1	103	1.25	2.90	86.5	15.860	575	
		1800	182/4TC	00318ET3E182TC-S	610	RSP	87	1.15	3.81	89.5	17.894	208-230/460	9
		1800	182/4TC	00318ET3E182TC-W22	700	N1	100	1.25	3.88	89.5	15.860	208-230/460	
		1800	182/4TC	00318ET3ERS182TC	610	RSP	72	1.15	3.91	89.5	16.404	208-230/460	9
		1800	182/4TC	00318ET3H182TC-W22	700	N1	100	1.25	3.10	89.5	15.860	575	
		1200	213/5TC	00312ET3E213TC-S	1,028	RSP	142	1.15	4.17	89.5	19.291	208-230/460	9
		1200	213/5TC	00312ET3E213TC-W22	1,180	N1	154	1.25	4.41	89.5	19.517	208-230/460	
		1200	213/5TC	00312ET3ERS213TC	1,028	RSP	142	1.15	4.41	89.5	20.257	208-230/460	9
		900	213/5TC	00309ET3E215TC-W22	2,166	N1	192	1.25	4.56	85.5	19.517	208-230/460	
5	3.7	3600	182/4TC	00536ET3E184TC-S	793	RSP	86	1.15	5.90	88.5	17.894	208-230/460	9
		3600	182/4TC	00536ET3E184TC-W22	911	N1	110	1.25	5.90	88.5	15.860	208-230/460	
		3600	182/4TC	00536ET3ERS184TC	793	RSP	101	1.15	5.96	89.5	16.404	208-230/460	9
		3600	182/4TC	00536ET3H184TC-W22	911	N1	112	1.25	4.72	88.5	15.860	575	
		1800	182/4TC	00518ET3E184TC-S	706	RSP	79	1.15	6.49	89.5	17.894	208-230/460	9
		1800	182/4TC	00518ET3E184TC-W22	810	N1	109	1.25	6.45	89.5	15.860	208-230/460	
		1800	182/4TC	00518ET3ERS184TC	706	RSP	97	1.15	6.40	89.5	16.404	208-230/460	9
		1800	182/4TC	00518ET3H184TC-W22	810	N1	108	1.25	5.16	89.5	15.860	575	
		1200	213/5TC	00512ET3E215TC-S	1,206	RSP	156	1.15	6.74	89.5	20.079	208-230/460	9
		1200	213/5TC	00512ET3E215TC-W22	1,384	N1	177	1.25	6.83	89.5	19.517	208-230/460	
		1200	213/5TC	00512ET3ERS215TC	1,206	RSP	158	1.15	6.83	89.5	20.257	208-230/460	9
7.5	5.5	3600	213/5TC	00736ET3E213TC-S	1,025	RSP	144	1.15	8.67	89.5	19.291	208-230/460	9
		3600	213/5TC	00736ET3E213TC-W22	1,177	N1	160	1.25	8.76	89.5	19.517	208-230/460	
		3600	213/5TC	00736ET3ERS213TC	1,025	RSP	147	1.15	8.63	91.0	20.257	208-230/460	9
		3600	182/4TC	00736ET3H184TC-W22	1,112	N1	93	1.25	7.01	89.5	15.860	575	
		3600	213/5TC	00736ET3H213TC-W22	1,177	N1	158	1.25	7.01	89.5	19.517	575	
		1800	213/5TC	00718ET3E213TC-S	994	RSP	131	1.15	9.07	91.7	18.898	208-230/460	9
		1800	213/5TC	00718ET3E213TC-W22	1,141	N1	174	1.25	9.00	91.7	19.517	208-230/460	
		1800	213/5TC	00718ET3ERS213TC	994	RSP	154	1.15	9.29	91.7	20.257	208-230/460	9
		1800	213/5TC	00718ET3H213TC-W22	1,141	N1	167	1.25	7.20	91.7	19.517	575	
		1200	254/6TC	00712ET3E254TC-S	1,859	RSP	248	1.15	9.98	91	22.559	208-230/460	9
		1200	254/6TC	00712ET3E254TC-W22	2,134	N1	295	1.25	9.48	91.0	24.945	208-230/460	
		1200	254/6TC	00712ET3ERS254TC	1,859	RSP	262	1.15	9.73	91.0	24.925	208-230/460	9
		900	254/6TC	00709ET3E256TC-W22	3,726	N1	324	1.25	11.1	87.5	24.945	208-230/460	

Continued on next page

Note: Flanged motors on Cast Iron frame sizes 143/5 to 254/6 have non-NEMA BA dimension. Refer to mechanical section of this catalog for details.

TEFC – C-Flange – Foot Mount *continued*

HP	kW	RPM	NEMA Frame	Catalog Number	List Price	Mult. Symbol	Approx. Shipping Weight (lbs)	Service Factor	FL Amps @ High	FL. Eff (%)	"C" Dimension (in)	Voltage (V)	Notes
10	7.5	3600	213/5TC	01036ET3E215TC-S	1,205	RSP	173	1.15	11.5	90.2	21.654	208-230/460	9
		3600	213/5TC	01036ET3E215TC-W22	1,383	N1	187	1.25	11.6	90.2	19.517	208-230/460	
		3600	213/5TC	01036ET3ERS215TC	1,205	RSP	170	1.15	11.5	91.7	20.257	208-230/460	9
		3600	213/5TC	01036ET3H215TC-W22	1,383	N1	185	1.25	9.28	90.2	19.517	575	
		1800	213/5TC	01018ET3E215TC-S	1,154	RSP	142	1.15	12.2	91.7	19.291	208-230/460	9
		1800	213/5TC	01018ET3E215TC-W22	1,325	N1	196	1.25	12.4	91.7	19.517	208-230/460	
		1800	213/5TC	01018ET3ERS215TC	1,154	RSP	166	1.15	12.7	91.7	20.257	208-230/460	9
		1800	213/5TC	01018ET3H215TC-W22	1,325	N1	197	1.25	9.92	91.7	19.517	575	
		1200	254/6TC	01012ET3E256TC-S	2,148	RSP	277	1.15	13.8	91	23.346	208-230/460	9
		1200	254/6TC	01012ET3E256TC-W22	2,465	N1	324	1.25	12.9	91.0	24.945	208-230/460	
		1200	254/6TC	01012ET3ERS256TC	2,148	RSP	282	1.15	13.3	91.0	24.925	208-230/460	9
15	11	3600	213/5TC	01536ET3E215TC-W22	1,748	N1	199	1.25	17.0	91.0	19.517	208-230/460	
		3600	254/6TC	01536ET3E254TC-S	1,649	RSP	220	1.15	17.4	91	22.559	208-230/460	9
		3600	254/6TC	01536ET3E254TC-W22	1,893	N1	283	1.25	17.2	91.0	24.945	208-230/460	
		3600	254/6TC	01536ET3ERS254TC	1,649	RSP	235	1.15	16.9	91.7	24.925	208-230/460	9
		3600	254/6TC	01536ET3H254TC-W22	1,893	N1	282	1.25	13.8	91.0	24.945	575	
		1800	254/6TC	01518ET3E254TC-S	1,670	RSP	242	1.15	18.2	92.4	22.559	208-230/460	9
		1800	254/6TC	01518ET3E254TC-W22	1,917	N1	336	1.25	18.0	92.4	24.945	208-230/460	
		1800	254/6TC	01518ET3ERS254TC	1,670	RSP	259	1.15	18.0	92.4	24.925	208-230/460	9
		1800	254/6TC	01518ET3H254TC-W22	1,917	N1	330	1.25	14.4	92.4	24.945	575	
		1200	284/6TC	01512ET3E284TC-W22	3,388	N1	409	1.25	17.9	91.7	27.929	208-230/460	
		1200	284/6TC	01512ET3H284TC-W22	3,388	N1	408	1.25	14.3	91.7	27.929	575	
20	15	3600	254/6TC	02036ET3E256TC-S	2,136	RSP	256	1.15	22.7	91	22.559	208-230/460	9
		3600	254/6TC	02036ET3E256TC-W22	2,451	N1	318	1.25	23.2	91.0	24.945	208-230/460	
		3600	254/6TC	02036ET3ERS256TC	2,136	RSP	266	1.15	22.9	92.4	24.925	208-230/460	9
		3600	254/6TC	02036ET3H256TC-W22	2,451	N1	319	1.25	18.6	91.0	24.945	575	
		1800	254/6TC	02018ET3E256TC-S	1,978	RSP	271	1.15	24.5	92.4	23.346	208-230/460	9
		1800	254/6TC	02018ET3E256TC-W22	2,270	N1	367	1.25	24.1	93.0	24.945	208-230/460	
		1800	254/6TC	02018ET3ERS256TC	1,978	RSP	286	1.15	24.4	93.0	24.925	208-230/460	9
		1800	254/6TC	02018ET3H256TC-W22	2,270	N1	366	1.25	19.3	93.0	24.945	575	
		1200	284/6TC	02012ET3E286TC-W22	4,060	N1	456	1.25	24.2	91.7	27.929	208-230/460	
25	18.5	3600	284/6TSC	02536ET3E284TSC-W22	3,096	N1	407	1.25	28.5	91.7	26.557	208-230/460	
		3600	284/6TSC	02536ET3H284TSC-W22	3,096	N1	406	1.25	22.8	91.7	26.557	575	
		1800	284/6TC	02518ET3E284TC-W22	2,840	N1	439	1.25	29.5	93.6	27.929	208-230/460	
		1800	284/6TC	02518ET3H284TC-W22	2,840	N1	432	1.25	23.6	93.6	27.929	575	

Continued on next page

Note: Flanged motors on Cast Iron frame sizes 143/5 to 254/6 have non-NEMA BA dimension. Refer to mechanical section of this catalog for details.

TEFC – C-Flange – Foot Mount *continued*

HP	kW	RPM	NEMA Frame	Catalog Number	List Price	Mult. Symbol	Approx. Shipping Weight (lbs)	Service Factor	FL Amps @ High	FL. Eff (%)	"C" Dimension (in)	Voltage (V)	Notes
30	22	3600	284/6TSC	03036ET3E286TSC-W22	3,659	N1	440	1.25	33.8	91.7	26.557	208-230/460	
		3600	284/6TSC	03036ET3H286TSC-W22	3,659	N1	437	1.25	27.0	91.7	26.557	575	
		1800	284/6TC	03018ET3E286TC-W22	3,321	N1	488	1.25	35.1	93.6	27.929	208-230/460	
		1800	284/6TC	03018ET3H286TC-W22	3,321	N1	487	1.25	28.1	93.6	27.929	575	
40	30	3600	324/6TSC	04036ET3E324TSC-W22	4,845	N1	589	1.25	45.8	92.4	29.616	208-230/460	
		3600	324/6TSC	04036ET3H324TSC-W22	4,845	N1	576	1.25	36.6	92.4	29.616	575	
		1800	324/6TC	04018ET3E324TC-W22	4,300	N1	630	1.25	48.2	94.1	31.116	208-230/460	
		1800	324/6TSC	04018ET3E324TSC-W22	4,300	N1	640	1.25	48.2	94.1	29.616	208-230/460	
		1800	324/6TC	04018ET3H324TC-W22	4,300	N1	630	1.25	38.6	94.1	31.116	575	
50	37	3600	324/6TSC	05036ET3E326TSC-W22	5,437	N1	622	1.25	56.1	93.0	29.616	208-230/460	
		1800	324/6TC	05018ET3E326TC-W22	5,221	N1	482	1.25	59.2	94.5	31.116	208-230/460	
		1800	324/6TSC	05018ET3E326TSC-W22	5,221	N1	479	1.25	59.2	94.5	29.616	208-230/460	
		1800	324/6TC	05018ET3H326TC-W22	5,221	N1	650	1.25	47.4	94.5	31.116	575	
		1200	364/5TC	05012ET3E365TC-W22	8,960	N1	1035	1.25	57.4	94.1	34.251	208-230/460	
60	45	3600	364/5TSC	06036ET3E364TSC-W22	7,994	N1	992	1.25	67.0	93.6	32.276	208-230/460	
		1800	364/5TC	06018ET3E364TC-W22	7,831	N1	1054	1.25	68.3	95.0	34.251	208-230/460	
		1800	364/5TC	06018ET3H364TC-W22	7,831	N1	1012	1.25	54.6	95.0	34.251	575	
75	55	3600	364/5TSC	07536ET3E365TSC-W22	9,533	N1	996	1.25	81.9	93.6	32.276	208-230/460	
		1800	364/5TC	07518ET3E365TC-W22	9,148	N1	1041	1.25	84.1	95.4	34.251	208-230/460	
		1800	364/5TC	07518ET3H365TC-W22	9,148	N1	1041	1.25	67.3	95.4	34.251	575	
100	75	1800	404/5TC	10018ET3E405TC-W22	12,179	N1	1328	1.25	111	95.4	39.730	208-230/460	
		1800	404/5TSC	10018ET3E405TSC-W22	12,179	N1	1300	1.25	111	95.4	36.732	208-230/460	
		1800	404/5TC	10018ET3H405TC-W22	12,179	N1	1328	1.25	88.8	95.4	39.730	575	
125	90	1800	444/5TC	12518ET3G444TC-W22	16,218	N1	1754	1.15	139	95.4	44.950	460	
		1800	444/5TSC	12518ET3G444TSC-W22	16,218	N1	1840	1.15	139	95.4	41.200	460	
		1800	444/5TC	12518ET3H444TC-W22	16,218	N1	1754	1.15	111	95.4	44.950	575	
150	110	1800	444/5TC	15018ET3G445TC-W22	18,025	N1	1960	1.15	170	95.8	44.950	460	
200	150	1800	445/7TC	20018ET3G447TC-W22	21,704	N1	2368	1.15	230	96.2	48.701	460	
250	185	1800	445/7TC	25018EP3G447TC-W22	24,645	W1	2513	1.15	283	95.4	48.701	460	30
		1800	447/9TC	25018EP3G449TC-W22	26,065	W1	2513	1.15	283	95.4	56.338	460	30
		1800	445/7TSC	25018ET3G447TSC-W22	34,280	N1	2361	1.15	281	96.2	44.951	460	
		1800	445/7TSC	25018ET3Q447TSC-W22	27,322	N1	2414	1.15	281	96.2	48.701	460	
300	220	1800	447/9TC	30018EP3G449TC-W22	30,515	W1	3837	1.15	337	95.4	56.338	460	30
350	260	1800	447/9TC	35018EP3G449TC-W22	37,087	W1	4300	1.15	396	95.8	56.338	460	30

Note: Flanged motors on Cast Iron frame sizes 143/5 to 254/6 have non-NEMA BA dimension. Refer to mechanical section of this catalog for details.

TEFC – C-Flange – Footless

HP	kW	RPM	NEMA Frame	Catalog Number	List Price	Mult. Symbol	Approx. Shipping Weight (lbs)	Service Factor	FL Amps @ High	FL. Eff (%)	"C" Dimension (in)	Voltage (V)	Notes
1	0.75	3600	143TC	00136EP3ER143TC-W22	456	W1	42	1.25	1.48	75.5	13.055	208-230/460	15;30
		3600	143TC	00136ET3ER143TC-W22	577	N1	42	1.25	1.43	78.5	13.055	208-230/460	15
		1800	143/5TC	00118EP3ER143TC-S	383	RS	37	1.15	1.56	82.5	14.882	208-230/460	9;15;30
		1800	143TC	00118EP3ER143TC-W22	440	W1	48	1.25	1.44	82.5	13.055	208-230/460	15;30
		1800	143/5TC	00118EP3ERSR143TC	383	RS	39	1.15	1.45	82.5	15.355	208-230/460	9;15;30
		1800	143/5TC	00118ET3ER143TC-S	484	RSP	43	1.15	1.47	85.5	14.882	208-230/460	9;15
		1800	143TC	00118ET3ER143TC-W22	572	N1	48	1.25	1.41	85.5	13.055	208-230/460	15
		1800	143/5TC	00118ET3ERSR143TC	484	RSP	42	1.15	1.55	85.5	15.355	208-230/460	9;15
		1200	143/5TC	00112EP3ER145TC-S	465	RS	41	1.15	1.66	80	14.488	208-230/460	9;15;30
		1200	145TC	00112EP3ER145TC-W22	550	W1	50	1.25	1.63	80.0	14.055	208-230/460	15;30
		1200	143/5TC	00112EP3ERSR145TC	465	RS	49	1.15	1.83	80.0	15.355	208-230/460	9;15;30
		1200	143/5TC	00112ET3ER145TC-S	554	RSP	43	1.15	1.58	82.5	14.882	208-230/460	9;15
		1200	145TC	00112ET3ER145TC-W22	655	N1	55	1.25	1.73	82.5	14.055	208-230/460	15
		1200	143/5TC	00112ET3ERSR145TC	554	RSP	48	1.15	1.75	82.5	15.355	208-230/460	9;15
1.5	1.1	3600	143/5TC	00156EP3ER143TC-S	399	RS	36	1.15	1.90	82.5	14.882	208-230/460	9;15;30
		3600	143TC	00156EP3ER143TC-W22	458	W1	48	1.25	1.99	82.5	13.055	208-230/460	15;30
		3600	143/5TC	00156EP3ERSR143TC	399	RS	40	1.15	1.95	82.5	15.355	208-230/460	9;15;30
		3600	143/5TC	00156ET3ER143TC-S	497	RSP	39	1.15	1.87	84	14.882	208-230/460	9;15
		3600	143TC	00156ET3ER143TC-W22	588	N1	48	1.25	1.91	84.0	13.055	208-230/460	15
		3600	143/5TC	00156ET3ERSR143TC	497	RSP	45	1.15	1.95	84.0	15.355	208-230/460	9;15
		1800	143/5TC	00158EP3ER145TC-S	388	RS	43	1.15	2.16	84	14.882	208-230/460	9;15;30
		1800	145TC	00158EP3ER145TC-W22	445	W1	53	1.25	2.03	84.0	14.055	208-230/460	15;30
		1800	143/5TC	00158EP3ERSR145TC	388	RS	43	1.15	2.20	84.0	15.355	208-230/460	9;15;30
		1800	143/5TC	00158ET3ER145TC-S	504	RSP	43	1.15	2.02	86.5	14.882	208-230/460	9;15
		1800	145TC	00158ET3ER145TC-W22	596	N1	54	1.25	2.02	86.5	14.055	208-230/460	15
		1800	143/5TC	00158ET3ERSR145TC	504	RSP	50	1.15	2.25	86.5	15.355	208-230/460	9;15
		1200	182/4TC	00152EP3ER182TC-S	580	RS	78	1.15	2.27	85.5	18.465	208-230/460	9;15;30
		1200	182TC	00152EP3ER182TC-W22	666	W1	99	1.25	2.24	85.5	16.080	208-230/460	15;30
		1200	182/4TC	00152EP3ERSR182TC	580	RS	74	1.15	2.37	85.5	17.821	208-230/460	9;15;30
		1200	182/4TC	00152ET3ER182TC-S	690	RSP	73	1.15	2.22	87.5	17.678	208-230/460	9;15
		1200	182TC	00152ET3ER182TC-W22	816	N1	99	1.25	2.39	87.5	16.080	208-230/460	15
		1200	182/4TC	00152ET3ERSR182TC	690	RSP	88	1.15	2.39	87.5	17.821	208-230/460	9;15

Continued on next page

Refer to electrical and mechanical data sections for additional technical information. Please refer to back cover for description of "NOTES"

For detailed specifications, data sheets, drawings and performance curves visit http://catalog.wegelectric.com

TEFC – C-Flange – Footless *continued*

HP	kW	RPM	NEMA Frame	Catalog Number	List Price	Mult. Symbol	Approx. Shipping Weight (lbs)	Service Factor	FL Amps @ High	FL. Eff (%)	"C" Dimension (in)	Voltage (V)	Notes
2	1.5	3600	143/5TC	00236EP3ER145TC-S	451	RS	41	1.15	2.55	84	14.882	208-230/460	9;15;30
		3600	145TC	00236EP3ER145TC-W22	518	W1	55	1.25	2.64	84.0	14.055	208-230/460	15;30
		3600	143/5TC	00236EP3ERSR145TC	451	RS	43	1.15	2.55	84.0	15.355	208-230/460	9;15;30
		3600	143/5TC	00236ET3ER145TC-S	539	RSP	45	1.15	2.47	85.5	15.275	208-230/460	9;15
		3600	145TC	00236ET3ER145TC-W22	638	N1	56	1.25	2.53	85.5	14.055	208-230/460	15
		3600	143/5TC	00236ET3ERSR145TC	539	RSP	49	1.15	2.50	85.5	15.355	208-230/460	9;15
		1800	143/5TC	00218EP3ER145TC-S	428	RS	47	1.15	2.95	84	15.669	208-230/460	9;15;30
		1800	145TC	00218EP3ER145TC-W22	492	W1	55	1.25	2.73	84.0	14.055	208-230/460	15;30
		1800	143/5TC	00218EP3ERSR145TC	428	RS	49	1.15	2.95	84.0	15.355	208-230/460	9;15;30
		1800	143/5TC	00218ET3ER145TC-S	558	RSP	47	1.15	2.72	86.5	15.275	208-230/460	9;15
		1800	145TC	00218ET3ER145TC-W22	659	N1	57	1.25	2.61	86.5	14.055	208-230/460	15
		1800	143/5TC	00218ET3ERSR145TC	558	RSP	56	1.15	2.85	86.5	15.355	208-230/460	9;15
		1200	182/4TC	00212EP3ER184TC-S	628	RS	88	1.15	3.15	86.5	19.233	208-230/460	9;15;30
		1200	184TC	00212EP3ER184TC-W22	721	W1	90	1.25	2.98	86.5	17.080	208-230/460	15;30
		1200	182/4TC	00212EP3ERSR184TC	628	RS	95	1.15	3.20	86.5	17.821	208-230/460	9;15;30
		1200	182/4TC	00212ET3ER184TC-S	747	RSP	83	1.15	3.00	88.5	18.465	208-230/460	9;15
		1200	184TC	00212ET3ER184TC-W22	883	N1	111	1.25	3.23	88.5	17.080	208-230/460	15
		1200	182/4TC	00212ET3ERSR184TC	747	RSP	99	1.15	3.22	88.5	17.821	208-230/460	9;15
3	2.2	3600	145TC	00336EP3ER145TC-W22	570	W1	53	1.15	3.76	85.5	14.055	208-230/460	15;30
		3600	182/4TC	00336EP3ER182TC-S	546	RS	67	1.15	3.80	85.5	17.678	208-230/460	9;15;30
		3600	182TC	00336EP3ER182TC-W22	627	W1	96	1.25	3.67	85.5	16.080	208-230/460	15;30
		3600	W182/4TC	00336EP3ERSR182TC	546	RS	73	1.15	3.67	85.5	19.136	208-230/460	9;15;30
		3600	182/4TC	00336ET3ER182TC-S	698	RSP	71	1.15	3.67	86.5	17.678	208-230/460	9;15
		3600	182TC	00336ET3ER182TC-W22	826	N1	102	1.25	3.63	86.5	16.080	208-230/460	15
		3600	182/4TC	00336ET3ERSR182TC	698	RSP	92	1.15	3.68	87.5	17.821	208-230/460	9;15
		1800	182/4TC	00318EP3ER182TC-S	492	RS	71	1.15	4.05	87.5	17.678	208-230/460	9;15;30
		1800	182TC	00318EP3ER182TC-W22	565	W1	95	1.25	3.85	87.5	16.080	208-230/460	15;30
		1800	W182/4TC	00318EP3ERSR182TC	492	RS	72	1.15	4.15	87.5	19.136	208-230/460	9;15;30
		1800	182/4TC	00318ET3ER182TC-S	610	RSP	87	1.15	3.81	89.5	19.233	208-230/460	9;15
		1800	182TC	00318ET3ER182TC-W22	721	N1	99	1.25	3.88	89.5	16.080	208-230/460	15
		1800	182/4TC	00318ET3ERSR182TC	610	RSP	73	1.15	3.91	89.5	17.821	208-230/460	9;15
		1200	213/5TC	00312EP3ER213TC-S	822	RS	112	1.15	4.26	87.5	20.827	208-230/460	9;15;30
		1200	213TC	00312EP3ER213TC-W22	943	W1	140	1.25	4.15	87.5	19.241	208-230/460	15;30
		1200	213/5TC	00312EP3ERSR213TC	822	RS	123	1.15	4.26	87.5	21.674	208-230/460	9;15;30
		1200	213/5TC	00312ET3ER213TC-S	1,028	RSP	142	1.15	4.17	89.5	21.220	208-230/460	9;15
		1200	213TC	00312ET3ER213TC-W22	1,203	N1	155	1.25	4.41	89.5	19.241	208-230/460	15
		1200	213/5TC	00312ET3ERSR213TC	1,028	RSP	135	1.15	4.41	89.5	21.674	208-230/460	9;15

Continued on next page

Refer to electrical and mechanical data sections for additional technical information. Please refer to back cover for description of "NOTES"

For detailed specifications, data sheets, drawings and performance curves visit http://catalog.wegelectric.com

Data subject to change without notice.

TEFC – C-Flange – Footless *continued*

HP	kW	RPM	NEMA Frame	Catalog Number	List Price	Mult. Symbol	Approx. Shipping Weight (lbs)	Service Factor	FL Amps @ High	FL. Eff (%)	"C" Dimension (in)	Voltage (V)	Notes
5	3.7	3600	182/4TC	00536EP3ER184TC-S	660	RS	76	1.15	5.96	87.5	18.071	208-230/460	9;15;30
		3600	184TC	00536EP3ER184TC-W22	758	W1	106	1.25	5.90	87.5	17.080	208-230/460	15;30
		3600	W182/4TC	00536EP3ERSR184TC	660	RS	66	1.15	6.10	87.5	19.136	208-230/460	9;15;30
		3600	182/4TC	00536ET3ER184TC-S	793	RSP	86	1.15	5.90	88.5	19.233	208-230/460	9;15
		3600	184TC	00536ET3ER184TC-W22	938	N1	114	1.25	5.90	88.5	17.080	208-230/460	15
		3600	182/4TC	00536ET3ERSR184TC	793	RSP	100	1.15	5.96	89.5	17.821	208-230/460	9;15
		1800	182/4TC	00518EP3ER184TC-S	577	RS	84	1.15	6.55	87.5	19.233	208-230/460	9;15;30
		1800	184TC	00518EP3ER184TC-W22	662	W1	105	1.25	6.49	87.5	17.080	208-230/460	15;30
		1800	W182/4TC	00518EP3ERSR184TC	577	RS	83	1.15	6.90	87.5	19.136	208-230/460	9;15;30
		1800	182/4TC	00518ET3ER184TC-S	706	RSP	79	1.15	6.49	89.5	17.894	208-230/460	9;15
		1800	184TC	00518ET3ER184TC-W22	834	N1	110	1.25	6.45	89.5	17.080	208-230/460	15
		1800	182/4TC	00518ET3ERSR184TC	706	RSP	95	1.15	6.40	89.5	17.821	208-230/460	9;15
		1200	213/5TC	00512EP3ER215TC-S	1,041	RS	134	1.15	7.08	87.5	21.220	208-230/460	9;15;30
		1200	215TC	00512EP3ER215TC-W22	1,195	W1	168	1.25	7.08	87.5	20.737	208-230/460	15;30
		1200	213/5TC	00512EP3ERSR215TC	1,041	RS	145	1.15	7.08	87.5	21.674	208-230/460	9;15;30
		1200	213/5TC	00512ET3ER215TC-S	1,206	RSP	156	1.15	6.74	89.5	22.008	208-230/460	9;15
		1200	215TC	00512ET3ER215TC-W22	1,426	N1	174	1.25	6.83	89.5	20.737	208-230/460	15
		1200	213/5TC	00512ET3ERSR215TC	1,206	RSP	151	1.15	6.83	89.5	21.674	208-230/460	9;15
7.5	5.5	3600	213/5TC	00736EP3ER213TC-S	901	RS	129	1.15	8.76	88.5	21.220	208-230/460	9;15;30
		3600	213TC	00736EP3ER213TC-W22	1,034	W1	149	1.25	8.86	88.5	19.241	208-230/460	15;30
		3600	213/5TC	00736EP3ERSR213TC	901	RS	120	1.15	9.00	88.5	21.674	208-230/460	9;15;30
		3600	213/5TC	00736ET3ER213TC-S	1,025	RSP	144	1.15	8.67	89.5	21.220	208-230/460	9;15
		3600	213TC	00736ET3ER213TC-W22	1,212	N1	152	1.25	8.76	89.5	19.241	208-230/460	15
		3600	213/5TC	00736ET3ERSR213TC	1,025	RSP	134	1.15	8.63	91.0	21.674	208-230/460	9;15
		1800	213/5TC	00718EP3ER213TC-S	764	RS	134	1.15	9.07	89.5	21.220	208-230/460	9;15;30
		1800	213TC	00718EP3ER213TC-W22	877	W1	150	1.25	9.31	89.5	19.241	208-230/460	15;30
		1800	213/5TC	00718EP3ERSR213TC	764	RS	125	1.15	9.64	89.5	21.674	208-230/460	9;15;30
		1800	213/5TC	00718ET3ER213TC-S	994	RSP	131	1.15	9.07	91.7	20.827	208-230/460	9;15
		1800	213TC	00718ET3ER213TC-W22	1,175	N1	170	1.25	9.00	91.7	19.241	208-230/460	15
		1800	213/5TC	00718ET3ERSR213TC	994	RSP	147	1.15	9.29	91.7	21.674	208-230/460	9;15
		1200	254/6TC	00712EP3ER254TC-S	1,576	RS	223	1.15	10.4	89.5	24.724	208-230/460	9;15;30
		1200	254/6TC	00712EP3ERSR254TC	1,576	RS	206	1.15	9.52	89.5	26.342	208-230/460	9;15;30
		1200	254/6TC	00712ET3ER254TC-S	1,859	RSP	248	1.15	9.98	91	24.724	208-230/460	9;15
		1200	254/6TC	00712ET3ERSR254TC	1,859	RSP	266	1.15	9.73	91.0	26.342	208-230/460	9;15

Continued on next page

Refer to electrical and mechanical data sections for additional technical information. Please refer to back cover for description of “NOTES”

For detailed specifications, data sheets, drawings and performance curves visit http://catalog.wegelectric.com

TEFC – C-Flange – Footless *continued*

HP	kW	RPM	NEMA Frame	Catalog Number	List Price	Mult. Symbol	Approx. Shipping Weight (lbs)	Service Factor	FL Amps @ High	FL. Eff (%)	"C" Dimension (in)	Voltage (V)	Notes
10	7.5	3600	213/5TC	01036EP3ER215TC-S	1,041	RS	144	1.15	11.8	89.5	22.008	208-230/460	9;15;30
		3600	215TC	01036EP3ER215TC-W22	1,195	W1	171	1.25	11.8	89.5	20.737	208-230/460	15;30
		3600	213/5TC	01036EP3ERSR215TC	1,041	RS	140	1.15	11.8	89.5	21.674	208-230/460	9;15;30
		3600	213/5TC	01036ET3ER215TC-S	1,205	RSP	173	1.15	11.5	90.2	23.583	208-230/460	9;15
		3600	215TC	01036ET3ER215TC-W22	1,424	N1	179	1.25	11.6	90.2	20.737	208-230/460	15
		3600	213/5TC	01036ET3ERSR215TC	1,205	RSP	163	1.15	11.5	91.7	21.674	208-230/460	9;15
		1800	213/5TC	01018EP3ER215TC-S	901	RS	152	1.15	12.1	89.5	22.401	208-230/460	9;15;30
		1800	215TC	01018EP3ER215TC-W22	1,034	W1	185	1.25	12.5	89.5	20.737	208-230/460	15;30
		1800	213/5TC	01018EP3ERSR215TC	901	RS	138	1.15	12.8	89.5	21.674	208-230/460	9;15;30
		1800	213/5TC	01018ET3ER215TC-S	1,154	RSP	142	1.15	12.2	91.7	21.220	208-230/460	9;15
		1800	215TC	01018ET3ER215TC-W22	1,366	N1	193	1.25	12.4	91.7	20.737	208-230/460	15
		1800	213/5TC	01018ET3ERSR215TC	1,154	RSP	158	1.15	12.7	91.7	21.674	208-230/460	9;15
		1800	213/5TC	01018ET3HR215TC-S	1,154	RSP	142	1.15	9.80	91.7	21.220	575	9;15
		1800	213/5TC	01018ET3HRSR215TC	1,154	RSP	158	1.15	10.2	91.7	21.674	575	9;15
		1200	254/6TC	01012EP3ER256TC-S	1,713	RS	241	1.15	14.0	89.5	24.724	208-230/460	9;15;30
		1200	254/6TC	01012EP3ERSR256TC	1,713	RS	206	1.15	13.3	89.5	26.342	208-230/460	9;15;30
15	11	3600	254/6TC	01536EP3ER254TC-S	1,488	RS	200	1.15	18.0	90.2	24.724	208-230/460	9;15;30
		3600	254TC	01536EP3ER254TC-W22	1,707	W1	278	1.25	17.4	90.2	25.063	208-230/460	15;30
		3600	W254/6TC	01536EP3ERSR254TC	1,488	RS	168	1.15	17.0	90.2	22.917	208-230/460	9;15;30
		3600	254/6TC	01536ET3ER254TC-S	1,649	RSP	220	1.15	17.4	91	24.724	208-230/460	9;15
		3600	254TC	01536ET3ER254TC-W22	1,950	N1	278	1.25	17.2	91.0	25.063	208-230/460	15
		3600	254/6TC	01536ET3ERSR254TC	1,649	RSP	238	1.15	16.9	91.7	26.342	208-230/460	9;15
		1800	254/6TC	01518EP3ER254TC-S	1,362	RS	214	1.15	18.7	91	24.724	208-230/460	9;15;30
		1800	254TC	01518EP3ER254TC-W22	1,564	W1	280	1.25	17.8	91.0	25.063	208-230/460	15;30
		1800	W254/6TC	01518EP3ERSR254TC	1,362	RS	190	1.15	18.5	91.0	22.917	208-230/460	9;15;30
		1800	254/6TC	01518ET3ER254TC-S	1,670	RSP	242	1.15	18.2	92.4	24.724	208-230/460	9;15
		1800	254TC	01518ET3ER254TC-W22	1,975	N1	332	1.25	18.0	92.4	25.063	208-230/460	15
		1800	254/6TC	01518ET3ERSR254TC	1,670	RSP	262	1.15	18.0	92.4	26.342	208-230/460	9;15
		1800	254/6TC	01518ET3HR254TC-S	1,670	RSP	242	1.15	14.6	92.4	24.724	575	9;15
		1800	254/6TC	01518ET3HRSR254TC	1,670	RSP	262	1.15	14.4	92.4	26.342	575	9;15

Continued on next page

Refer to electrical and mechanical data sections for additional technical information. Please refer to back cover for description of "NOTES"

For detailed specifications, data sheets, drawings and performance curves visit http://catalog.wegelectric.com

Data subject to change without notice.

TEFC – C-Flange – Footless *continued*

HP	kW	RPM	NEMA Frame	Catalog Number	List Price	Mult. Symbol	Approx. Shipping Weight (lbs)	Service Factor	FL Amps @ High	FL. Eff (%)	"C" Dimension (in)	Voltage (V)	Notes
20	15	3600	254/6TC	02036EP3ER256TC-S	1,790	RS	238	1.15	23.5	90.2	24.724	208-230/460	9;15;30
		3600	256TC	02036EP3ER256TC-W22	2,054	W1	306	1.25	23.7	90.2	26.795	208-230/460	15;30
		3600	254/6TC	02036EP3ERSR256TC	1,790	RS	167	1.15	23.7	90.2	26.342	208-230/460	9;15;30
		3600	254/6TC	02036ET3ER256TC-S	2,136	RSP	256	1.15	22.7	91	24.724	208-230/460	9;15
		3600	256TC	02036ET3ER256TC-W22	2,525	N1	315	1.25	23.2	91.0	26.795	208-230/460	15
		3600	254/6TC	02036ET3ERSR256TC	2,136	RSP	269	1.15	22.9	92.4	26.342	208-230/460	9;15
		1800	254/6TC	02018EP3ER256TC-S	1,658	RS	242	1.15	24.9	91	24.724	208-230/460	9;15;30
		1800	256TC	02018EP3ER256TC-W22	1,903	W1	317	1.25	24.3	91.0	26.795	208-230/460	15;30
		1800	254/6TC	02018EP3ERSR256TC	1,658	RS	263	1.15	24.9	91.0	26.342	208-230/460	9;15;30
		1800	256TC	02018EP3HR256TC-W22	1,903	W1	313	1.25	19.4	91.0	26.795	575	15;30
		1800	254/6TC	02018ET3ER256TC-S	1,978	RSP	271	1.15	24.5	92.4	25.511	208-230/460	9;15
		1800	256TC	02018ET3ER256TC-W22	2,338	N1	362	1.25	24.1	93.0	26.795	208-230/460	15
		1800	254/6TC	02018ET3ERSR256TC	1,978	RSP	289	1.15	24.4	93.0	26.342	208-230/460	9;15
25	18.5	3600	284TSC	02536EP3ER284TSC-W22	2,466	W1	383	1.25	29.0	91.0	27.305	208-230/460	15;30
		1800	284TC	02518EP3ER284TC-W22	2,294	W1	421	1.25	29.2	92.4	28.677	208-230/460	15;30
		1800	284TC	02518ET3ER284TC-W22	2,925	N1	436	1.25	29.5	93.6	28.677	208-230/460	15
30	22	3600	286TSC	03036EP3ER286TSC-W22	2,917	W1	413	1.25	33.7	91.0	28.801	208-230/460	15;30
		1800	286TC	03018EP3ER286TC-W22	2,785	W1	454	1.25	34.3	92.4	30.173	208-230/460	15;30
		1800	286TC	03018ET3ER286TC-W22	3,421	N1	484	1.25	35.1	93.6	30.173	208-230/460	15
		1200	326TSC	03012EP3ER326TSC-W22	4,887	W1	610	1.25	35.8	91.7	32.254	208-230/460	15;30
40	30	3600	324TSC	04036EP3ER324TSC-W22	4,252	W1	570	1.25	46.1	91.7	30.758	208-230/460	15;30
		1800	324TC	04018EP3ER324TC-W22	3,786	W1	528	1.25	47.6	93.0	32.258	208-230/460	15;30
		1800	324TC	04018ET3ER324TC-W22	4,429	N1	591	1.25	48.2	94.1	32.258	208-230/460	15
50	37	1800	326TC	05018EP3ER326TC-W22	4,208	W1	615	1.25	58.1	93.0	33.754	208-230/460	15;30
		1800	326TC	05018ET3ER326TC-W22	5,378	N1	474	1.25	59.2	94.5	33.754	208-230/460	15
75	55	1800	364/5TC	07518EP3ER365TC-W22	7,950	W1	1047	1.25	84.3	94.1	37.440	208-230/460	15;30

Refer to electrical and mechanical data sections for additional technical information. Please refer to back cover for description of "NOTES"

For detailed specifications, data sheets, drawings and performance curves visit http://catalog.wegelectric.com

Three-Phase General Purpose Motors

ODP Cast Iron

WEG Open Drip Proof motors are designed to meet demanding applications in environments where dirt and humidity are minimal. These motors are specifically designed to provide maximum ventilation and cool operation.



Features that make a difference:

- 50/60 Hz rated up to 250 HP (Same Horse Power at 50 Hz with a 1.0 service factor)
- Class F insulation (Impregnation Resin and Magnet wire are class H)
- Class B Rise at 1.15 Service Factor
- F1 Mounted (Cast Iron Frame motors are F2 convertible)
- Stainless Steel Nameplate - Laser etched with high contrast background (Cast Iron Frames only)
- Cast Iron Frames: Regreasable ball bearings (Frames 254T and up)

Inverter Rated:
1000:1 for variable torque
4:1 for constant torque

** Frame 404/5T 150HP and up 2:1CT and 1000:1VT*

ADDITIONAL TECHNICAL DATA

ELECTRICAL DATA: p. B-18

MECHANICAL DATA: p. C-15

Three-Phase General Purpose Motors

ODP Rolled Steel



Standard Features:

- Rated Output: 0.25 to 25 HP
- Number of Poles: 2 to 6
- Class F insulation
- Frame Sizes: NEMA 56 to 254/6T
- Efficiency levels: High Efficiency (EPAct) and NEMA Premium®
- Frequency: 60 Hz (dual rated 50 Hz 190-220/380-415V)
- IP21 standard
- F1 mount as standard
- Foot mount / C-face / Footless availability
- Enclosure: ODP, ODPAO as optional
- Aluminum endshields
- Cast Iron flanges for improved strength (182/4TC and larger)
- Internal bolts, giving a clean surface to the motor, avoiding trapping materials and allowing easy paint job after assembly to the load if required
- Double shielded ball bearings on frames 56 to 213/5T. Optional double sealed ball bearings and/or bearing cap
- Versions: General Purpose, Jet Pump, Close-coupled Pump type “JM” and “JP” and Compressor Duty

Optional Features:

- F2 and F3 mount
- Enclosure: ODPAO
- Regreasable bearings optional on 182/4T and 213/5T
- Double sealed ball bearings and/or bearing cap
- Drip cover
- Internal Aegis® SGR
- Space heaters and thermal protection (thermostats or thermistors)
- Refer to the mod section for more options

Features that make a difference:

- New ventilation system for improved thermal performance
- Robust feet design suitable for tougher applications
- New and more robust eyebolts design (frames 182/4T and up) plus a second eyebolt on non-drive end allowing vertical lifting capability (frames 213/5T and 254/6T)
- Oversized diagonally split aluminum terminal box that exceeds IP55 requirements
- Terminal box rotatable in 90 degrees increments for flexibility during installation
- Option for internal AEGIS® SGR
- Color coded leads as standard for easy wiring
- Regreasable ball bearings on 254/6T frame as standard (optional for 182/4T and 213/5T)
- Bearing cap as standard on flanged motors, optional on non flanged
- Suitable for VFD operation as per NEMA MG1 part 31.4.4.2
- Motor frame painting system 500 hours salt spray resistant

ADDITIONAL TECHNICAL DATA

ELECTRICAL DATA: p. B-18

MECHANICAL DATA: p. C-11





ODP – Foot Mount

HP	kW	RPM	NEMA Frame	Catalog Number	List Price	Mult. Symbol	Approx. Shipping Weight (lbs)	Service Factor	FL Amps @ High	FL. Eff (%)	"C" Dimension (in)	Voltage (V)	Notes
1	0.75	1800	E143/5T	00118OT3E143T	390	N1B	48	1.15	1.45	85.5	12.047	208-230/460	9
		1800	143/5T	00118OT3E143T-S	390	N1B	39	1.15	1.51	85.5	11.181	208-230/460	9
		1800	E143/5T	00118OT3H143T	390	N1B	48	1.15	1.16	85.5	12.047	575	9
		1800	143/5T	00118OT3H143T-S	390	N1B	39	1.15	1.21	85.5	11.181	575	9
		1800	E143/5T	00118OT3P143T	390	N1B	41	1.15	3.34	85.5	12.047	200	9
		1800	143/5T	00118OT3P143T-S	390	N1B	39	1.15	3.47	85.5	11.181	200	9
		1200	E143/5T	00112OT3E145T	446	N1B	43	1.15	1.63	82.5	12.047	208-230/460	9
		1200	143/5T	00112OT3E145T-S	446	N1B	40	1.15	1.65	82.5	11.181	208-230/460	9
1.5	1.1	3600	E143/5T	00156OT3E143T	442	N1B	40	1.15	1.90	85.5	12.047	208-230/460	9
		3600	143/5T	00156OT3E143T-S	442	N1B	34	1.15	1.85	84	11.181	208-230/460	9
		3600	E143/5T	00156OT3H143T	442	N1B	40	1.15	1.52	85.5	12.047	575	9
		3600	143/5T	00156OT3H143T-S	442	N1B	34	1.15	1.48	84	11.181	575	9
		1800	E143/5T	00158OT3E145T	449	N1B	56	1.15	2.20	86.5	12.047	208-230/460	9
		1800	143/5T	00158OT3E145T-S	449	N1B	47	1.15	2.07	86.5	12.362	208-230/460	9
		1800	E143/5T	00158OT3H145T	449	N1B	56	1.15	1.76	86.5	12.047	575	9
		1800	143/5T	00158OT3H145T-S	449	N1B	47	1.15	1.66	86.5	12.362	575	9
		1800	E143/5T	00158OT3P145T	449	N1B	56	1.15	5.06	86.5	12.047	200	9
		1800	143/5T	00158OT3P145T-S	449	N1B	47	1.15	4.77	86.5	12.362	200	9
		1200	182T	00152OT3E182T	588	N1B	67	1.15	2.31	86.5	13.504	208-230/460	9
		1200	182/4T	00152OT3E182T-S	588	N1B	63	1.15	2.25	86.5	13.957	208-230/460	9
2	1.5	3600	E143/5T	00236OT3E145T	487	N1B	44	1.15	2.50	86.5	12.047	208-230/460	9
		3600	143/5T	00236OT3E145T-S	487	N1B	42	1.15	2.42	85.5	11.969	208-230/460	9
		3600	E143/5T	00236OT3H145T	487	N1B	44	1.15	2.00	86.5	12.047	575	9
		3600	143/5T	00236OT3H145T-S	487	N1B	42	1.15	1.94	85.5	11.969	575	9
		1800	E143/5T	00218OT3E145T	492	N1B	56	1.15	2.90	86.5	12.047	208-230/460	9
		1800	143/5T	00218OT3E145T-S	492	N1B	44	1.15	2.69	86.5	12.362	208-230/460	9
		1800	E143/5T	00218OT3H145T	492	N1B	56	1.15	2.32	86.5	12.047	575	9
		1800	143/5T	00218OT3H145T-S	492	N1B	44	1.15	2.15	86.5	12.362	575	9
		1800	E143/5T	00218OT3P145T	492	N1B	56	1.15	6.67	86.5	12.047	200	9
		1800	143/5T	00218OT3P145T-S	492	N1B	44	1.15	6.18	86.5	12.362	200	9
		1200	184T	00212OT3E184T	597	N1B	77	1.15	3.03	87.5	14.291	208-230/460	9
		1200	182/4T	00212OT3E184T-S	597	N1B	73	1.15	2.95	87.5	14.744	208-230/460	9

Continued on next page

Refer to electrical and mechanical data sections for additional technical information. Please refer to back cover for description of "NOTES"

For detailed specifications, data sheets, drawings and performance curves visit http://catalog.wegelectric.com

Data subject to change without notice.

ODP – Foot Mount *continued*

HP	kW	RPM	NEMA Frame	Catalog Number	List Price	Mult. Symbol	Approx. Shipping Weight (lbs)	Service Factor	FL Amps @ High	FL. Eff (%)	"C" Dimension (in)	Voltage (V)	Notes
3	2.2	3600	F143/5T	00336OT3E145T	545	N1B	49	1.15	3.50	86.5	12.835	208-230/460	9
		3600	143/5T	00336OT3E145T-S	545	N1B	45	1.15	3.59	85.5	12.362	208-230/460	9
		3600	F143/5T	00336OT3H145T	545	N1B	49	1.15	2.80	86.5	12.835	575	9
		3600	143/5T	00336OT3H145T-S	545	N1B	45	1.15	2.87	85.5	12.362	575	9
		1800	182T	00318OT3E182T	524	N1B	66	1.15	4.06	89.5	13.504	208-230/460	9
		1800	182/4T	00318OT3E182T-S	524	N1B	73	1.15	3.86	89.5	15.138	208-230/460	9
		1800	182T	00318OT3H182T	524	N1B	66	1.15	3.25	89.5	13.504	575	9
		1800	182/4T	00318OT3H182T-S	524	N1B	73	1.15	3.09	89.5	15.138	575	9
		1800	182T	00318OT3P182T	523	N1B	65	1.15	9.34	89.5	13.504	200	9
		1800	182/4T	00318OT3P182T-S	523	N1B	73	1.15	8.87	89.5	15.138	200	9
		1200	213/5T	00312OT3E213T	775	N1B	107	1.15	4.27	88.5	17.165	208-230/460	9
		1200	213/5T	00312OT3E213T-S	775	N1B	110	1.15	4.16	88.5	16.575	208-230/460	9
5	3.7	3600	182T	00536OT3E182T	651	N1B	65	1.15	6.17	88.5	13.504	208-230/460	9
		3600	182/4T	00536OT3E182T-S	651	N1B	66	1.15	6.10	86.5	14.764	208-230/460	9
		3600	182T	00536OT3H182T	651	N1B	65	1.15	4.94	88.5	13.504	575	9
		3600	182/4T	00536OT3H182T-S	651	N1B	66	1.15	4.88	86.5	14.764	575	9
		1800	184T	00518OT3E184T	630	N1B	78	1.15	6.41	89.5	14.291	208-230/460	9
		1800	182/4T	00518OT3E184T-S	630	N1B	87	1.15	6.33	89.5	16.319	208-230/460	9
		1800	184T	00518OT3H184T	630	N1B	76	1.15	5.13	89.5	14.291	575	9
		1800	182/4T	00518OT3H184T-S	630	N1B	87	1.15	5.06	89.5	16.319	575	9
		1800	184T	00518OT3P184T	629	N1B	76	1.15	14.7	89.5	14.291	200	9
		1800	182/4T	00518OT3P184T-S	629	N1B	87	1.15	14.6	89.5	16.319	200	9
		1200	213/5T	00512OT3E215T	1,057	N1B	123	1.15	6.92	89.5	17.165	208-230/460	9
		1200	213/5T	00512OT3E215T-S	1,057	N1B	129	1.15	6.74	89.5	16.969	208-230/460	9
7.5	5.5	3600	184T	00736OT3E184T	920	N1B	74	1.15	8.97	88.5	14.291	208-230/460	9
		3600	182/4T	00736OT3E184T-S	920	N1B	77	1.15	8.67	88.5	15.138	208-230/460	9
		3600	184T	00736OT3H184T	920	N1B	74	1.15	7.18	88.5	14.291	575	9
		3600	182/4T	00736OT3H184T-S	920	N1B	77	1.15	6.93	88.5	15.138	575	9
		1800	213/5T	00718OT3E213T	910	N1B	113	1.15	9.03	91.0	17.165	208-230/460	9
		1800	213/5T	00718OT3E213T-S	910	N1B	128	1.15	9.14	91	16.575	208-230/460	9
		1800	213/5T	00718OT3H213T	910	N1B	108	1.15	7.22	91.0	17.165	575	9
		1800	213/5T	00718OT3H213T-S	910	N1B	128	1.15	7.31	91	16.575	575	9
		1800	213/5T	00718OT3P213T	910	N1B	109	1.15	20.8	91.0	17.165	200	9
		1800	213/5T	00718OT3P213T-S	910	N1B	128	1.15	21.0	91	16.575	200	9
		1200	254T	00712OT3E254T	1,467	N1B	247	1.15	9.69	90.2	20.669	208-230/460	
		1200	254/6T	00712OT3E254T-S	1,467	N1B	231	1.15	10.2	90.2	20.472	208-230/460	9

Continued on next page

Refer to electrical and mechanical data sections for additional technical information. Please refer to back cover for description of "NOTES"

For detailed specifications, data sheets, drawings and performance curves visit http://catalog.wegelectric.com

ODP – Foot Mount *continued*

HP	kW	RPM	NEMA Frame	Catalog Number	List Price	Mult. Symbol	Approx. Shipping Weight (lbs)	Service Factor	FL Amps @ High	FL. Eff (%)	"C" Dimension (in)	Voltage (V)	Notes
10	7.5	3600	213/5T	010360T3E213T	1,081	N1B	133	1.15	11.9	90.2	17.165	208-230/460	9
		3600	213/5T	010360T3E213T-S	1,081	N1B	128	1.15	12.0	89.5	16.969	208-230/460	9
		3600	213/5T	010360T3H213T	1,081	N1B	132	1.15	9.49	90.2	17.165	575	9
		3600	213/5T	010360T3H213T-S	1,081	N1B	128	1.15	9.60	89.5	16.969	575	9
		1800	213/5T	010180T3E215T	1,102	N1B	139	1.15	12.2	91.7	17.165	208-230/460	9
		1800	213/5T	010180T3E215T-S	1,102	N1B	149	1.15	12.4	91.7	17.756	208-230/460	9
		1800	213/5T	010180T3H215T	1,102	N1B	139	1.15	9.76	91.7	17.165	575	9
		1800	213/5T	010180T3H215T-S	1,102	N1B	149	1.15	9.90	91.7	17.756	575	9
		1800	213/5T	010180T3P215T	1,101	N1B	139	1.15	28.1	91.7	17.165	200	9
		1800	213/5T	010180T3P215T-S	1,101	N1B	149	1.15	28.4	91.7	17.756	200	9
		1200	256T	010120T3E256T	1,717	N1B	281	1.15	13.0	91.7	22.401	208-230/460	
		1200	254/6T	010120T3E256T-S	1,717	N1B	254	1.15	13.9	91.7	20.472	208-230/460	9
15	11	3600	213/5T	015360T3E215T	1,492	N1B	134	1.15	17.4	91.0	17.165	208-230/460	9
		3600	213/5T	015360T3E215T-S	1,492	N1B	143	1.15	17.2	90.2	17.756	208-230/460	9
		3600	213/5T	015360T3H215T	1,492	N1B	134	1.15	13.9	91.0	17.165	575	9
		3600	213/5T	015360T3H215T-S	1,492	N1B	143	1.15	13.8	90.2	17.756	575	9
		1800	254T	015180T3E254T	1,477	N1B	261	1.15	18.6	93.0	20.669	208-230/460	
		1800	254/6T	015180T3E254T-S	1,477	N1B	220	1.15	18.3	93	20.472	208-230/460	9
		1800	254T	015180T3H254T	1,477	N1B	261	1.15	14.9	93.0	20.669	575	
		1800	254/6T	015180T3H254T-S	1,477	N1B	220	1.15	14.7	93	20.472	575	9
		1800	254T	015180T3P254T	1,380	N1B	262	1.15	42.8	93.0	20.669	200	
		1800	254/6T	015180T3P254T-S	1,380	N1B	220	1.15	42.2	93	20.472	200	9
		1200	284T	015120T3E284T	2,412	N1B	360	1.15	17.7	91.7	23.386	208-230/460	
20	15	3600	254T	020360T3E254T	1,760	N1B	220	1.15	24.6	91.0	20.669	208-230/460	
		3600	254/6T	020360T3E254T-S	1,760	N1B	196	1.15	23.8	91	20.472	208-230/460	9
		3600	254T	020360T3H254T	1,760	N1B	220	1.15	19.7	91.0	20.669	575	
		3600	254/6T	020360T3H254T-S	1,760	N1B	196	1.15	19.0	91	20.472	575	9
		1800	256T	020180T3E256T	1,832	N1B	299	1.15	25.0	93.0	22.401	208-230/460	
		1800	254/6T	020180T3E256T-S	1,832	N1B	243	1.15	24.7	93	20.472	208-230/460	9
		1800	256T	020180T3H256T	1,832	N1B	298	1.15	20.0	93.0	22.401	575	
		1800	254/6T	020180T3H256T-S	1,832	N1B	243	1.15	19.7	93	20.472	575	9
		1800	256T	020180T3P256T	1,832	N1B	298	1.15	57.5	93.0	22.401	200	
		1800	254/6T	020180T3P256T-S	1,832	N1B	243	1.15	56.8	93	20.472	200	9
		1200	286T	020120T3E286T	3,034	N1B	418	1.15	24.0	92.4	24.882	208-230/460	
		1200	286T	020120T3H286T	3,034	N1B	418	1.15	19.2	92.4	24.882	575	

Continued on next page

Refer to electrical and mechanical data sections for additional technical information. Please refer to back cover for description of "NOTES"

For detailed specifications, data sheets, drawings and performance curves visit http://catalog.wegelectric.com

Data subject to change without notice.

ODP – Foot Mount *continued*

HP	kW	RPM	NEMA Frame	Catalog Number	List Price	Mult. Symbol	Approx. Shipping Weight (lbs)	Service Factor	FL Amps @ High	FL. Eff (%)	"C" Dimension (in)	Voltage (V)	Notes
25	18.5	3600	256T	025360T3E256T	2,139	N1B	262	1.15	29.8	91.7	22.401	208-230/460	
		3600	254/6T	025360T3E256T-S	2,139	N1B	219	1.15	29.1	91.7	20.472	208-230/460	9
		3600	256T	025360T3H256T	2,139	N1B	261	1.15	23.8	91.7	22.401	575	
		3600	254/6T	025360T3H256T-S	2,139	N1B	219	1.15	23.3	91.7	20.472	575	9
		1800	284T	025180T3E284T	2,160	N1B	372	1.15	29.9	93.6	23.386	208-230/460	
		1800	284TS	025180T3E284TS	2,160	N1B	370	1.15	29.9	93.6	22.000	208-230/460	
		1800	284T	025180T3H284T	2,160	N1B	371	1.15	23.9	93.6	23.386	575	
		1800	284TS	025180T3H284TS	2,159	N1B	371	1.15	23.9	93.6	22.000	575	
		1800	284T	025180T3P284T	2,159	N1B	372	1.15	68.8	93.6	23.386	200	
		1200	324T	025120T3E324T	3,519	N1B	556	1.15	30.4	93.0	26.181	208-230/460	
30	22	3600	284TS	030360T3E284TS	2,487	N1B	345	1.15	35.2	92.4	22.000	208-230/460	
		3600	284TS	030360T3H284TS	2,487	N1B	344	1.15	28.2	92.4	22.000	575	
		3600	284TS	030360T3V284TS	2,487	N1B	373	1.15	40.5	92.4	22.000	200/400	
		1800	286T	030180T3E286T	2,530	N1B	433	1.15	35.4	94.1	24.882	208-230/460	
		1800	286TS	030180T3E286TS	2,530	N1B	431	1.15	35.4	94.1	23.504	208-230/460	
		1800	286T	030180T3H286T	2,530	N1B	433	1.15	28.3	94.1	24.882	575	
		1800	286TS	030180T3H286TS	2,530	N1B	429	1.15	28.3	94.1	23.504	575	
		1800	286T	030180T3P286T	2,530	N1B	434	1.15	81.4	94.1	24.882	200	
		1800	286TS	030180T3V286TS	2,590	N1B	397	1.15	40.7	94.1	23.504	200/400	
		1200	326T	030120T3E326T	3,890	N1B	578	1.15	36.0	93.6	27.667	208-230/460	
40	30	3600	286TS	040360T3E286TS	3,308	N1B	390	1.15	47.1	93.0	23.504	208-230/460	
		3600	286TS	040360T3H286TS	3,308	N1B	390	1.15	37.7	93.0	23.504	575	
		3600	286TS	040360T3V286TS	3,308	N1B	457	1.15	54.2	93.0	23.504	200/400	
		1800	324T	040180T3E324T	3,095	N1B	554	1.15	48.2	94.1	26.181	208-230/460	
		1800	324TS	040180T3E324TS	3,095	N1B	550	1.15	48.2	94.1	24.685	208-230/460	
		1800	324T	040180T3H324T	3,095	N1B	552	1.15	38.6	94.1	26.181	575	
		1800	324TS	040180T3H324TS	3,095	N1B	548	1.15	38.6	94.1	24.685	575	
		1800	324T	040180T3P324T	3,095	N1B	554	1.15	111	94.1	26.181	200	
		1800	324TS	040180T3V324TS	3,095	N1B	552	1.15	55.4	94.1	24.685	200/400	
		1200	364/5T	040120T3E364T	5,544	N1B	910	1.15	48.2	94.1	29.764	208-230/460	

Continued on next page

Refer to electrical and mechanical data sections for additional technical information. Please refer to back cover for description of "NOTES"

For detailed specifications, data sheets, drawings and performance curves visit http://catalog.wegelectric.com

ODP – Foot Mount *continued*

HP	kW	RPM	NEMA Frame	Catalog Number	List Price	Mult. Symbol	Approx. Shipping Weight (lbs)	Service Factor	FL Amps @ High	FL. Eff (%)	"C" Dimension (in)	Voltage (V)	Notes
50	37	3600	324TS	050360T3E324TS	3,820	N1B	555	1.15	59.1	93.6	24.685	208-230/460	
		3600	324TS	050360T3H324TS	3,820	N1B	554	1.15	47.3	93.6	24.685	575	
		3600	324TS	050360T3V324TS	3,820	N1B	523	1.15	68.0	93.6	24.685	200/400	
		1800	326T	050180T3E326T	3,788	N1B	583	1.15	61.4	94.5	27.667	208-230/460	
		1800	326TS	050180T3E326TS	3,788	N1B	580	1.15	61.4	94.5	26.181	208-230/460	
		1800	326TS	050180T3G326TS	3,788	N1B	579	1.15	61.4	94.5	26.181	460	
		1800	326T	050180T3H326T	3,788	N1B	580	1.15	49.1	94.5	27.667	575	
		1800	326TS	050180T3H326TS	3,788	N1B	577	1.15	49.1	94.5	26.181	575	
		1800	326T	050180T3P326T	3,788	N1B	583	1.15	141	94.5	27.667	200	
		1800	326TS	050180T3V326TS	3,788	N1B	595	1.15	70.6	94.5	26.181	200/400	
		1200	364/5T	050120T3E365T	6,392	N1B	924	1.15	60.2	94.1	29.764	208-230/460	
60	45	3600	326TS	060360T3E326TS	4,581	N1B	552	1.15	71.0	93.6	26.181	208-230/460	
		3600	326TS	060360T3G326TS	4,581	N1B	551	1.15	71.0	93.6	26.181	460	
		3600	326TS	060360T3H326TS	4,581	N1B	549	1.15	56.8	93.6	26.181	575	
		3600	326TS	060360T3V326TS	4,581	N1B	609	1.15	81.7	93.6	26.181	200/400	
		1800	364/5T	060180T3E364T	4,443	N1B	881	1.15	69.9	95.0	29.764	208-230/460	
		1800	364/5TS	060180T3E364TS	4,443	N1B	876	1.15	69.9	95.0	27.638	208-230/460	
		1800	364/5T	060180T3G364T	4,443	N1B	951	1.15	69.9	95.0	29.764	460	
		1800	364/5TS	060180T3G364TS	4,443	N1B	875	1.15	69.9	95.0	27.638	460	
		1800	364/5T	060180T3H364T	4,443	N1B	879	1.15	55.9	95.0	29.764	575	
		1800	364/5TS	060180T3H364TS	4,443	N1B	874	1.15	55.9	95.0	27.638	575	
		1800	364/5TS	060180T3V364TS	4,443	N1B	879	1.15	80.4	95.0	27.638	200/400	
		1200	404/5T	060120T3E404T	7,562	N1B	1095	1.15	71.2	94.5	34.133	208-230/460	
75	55	3600	364/5TS	075360T3E364TS	5,799	N1B	843	1.15	81.5	94.1	27.638	208-230/460	
		3600	364/5TS	075360T3G364TS	5,799	N1B	841	1.15	81.5	94.1	27.638	460	
		3600	364/5TS	075360T3H364TS	5,799	N1B	841	1.15	65.2	94.1	27.638	575	
		3600	364/5TS	075360T3V364TS	5,799	N1B	805	1.15	93.7	94.1	27.638	200/400	
		1800	364/5T	075180T3E365T	5,658	N1B	950	1.15	85.5	95.0	29.764	208-230/460	
		1800	364/5TS	075180T3E365TS	5,658	N1B	946	1.15	85.5	95.0	27.638	208-230/460	
		1800	364/5T	075180T3G365T	5,658	N1B	948	1.15	85.5	95.0	29.764	460	
		1800	364/5TS	075180T3G365TS	5,658	N1B	943	1.15	85.5	95.0	27.638	460	
		1800	364/5T	075180T3H365T	5,658	N1B	949	1.15	68.4	95.0	29.764	575	
		1800	364/5TS	075180T3H365TS	5,658	N1B	942	1.15	68.4	95.0	27.638	575	
		1800	364/5TS	075180T3V365TS	5,658	N1B	945	1.15	98.3	95.0	27.638	200/400	
		1200	404/5T	075120T3E405T	8,358	N1B	1121	1.15	85.9	94.5	34.133	208-230/460	

Continued on next page

Refer to electrical and mechanical data sections for additional technical information. Please refer to back cover for description of "NOTES"

For detailed specifications, data sheets, drawings and performance curves visit http://catalog.wegelectric.com

Data subject to change without notice.

ODP – Foot Mount *continued*

HP	kW	RPM	NEMA Frame	Catalog Number	List Price	Mult. Symbol	Approx. Shipping Weight (lbs)	Service Factor	FL Amps @ High	FL. Eff (%)	"C" Dimension (in)	Voltage (V)	Notes
		3600	364/5TS	100360T3E365TS	6,644	N1B	905	1.15	111	94.5	27.638	208-230/460	
		3600	364/5TS	100360T3G365TS	6,644	N1B	904	1.15	111	94.5	27.638	460	
		3600	364/5TS	100360T3H365TS	6,644	N1B	903	1.15	88.8	94.5	27.638	575	
		3600	364/5TS	100360T3V365TS	6,644	N1B	935	1.15	128	94.5	27.638	200/400	
		1800	404/5T	100180T3E404T	7,141	N1B	1111	1.15	115	95.4	34.133	208-230/460	
		1800	404/5TS	100180T3E404TS	7,141	N1B	1207	1.15	115	95.4	31.141	208-230/460	
100	75	1800	404/5T	100180T3ERB404T	7,141	N1B	1207	1.15	115	95.4	34.133	208-230/460	14
		1800	404/5T	100180T3G404T	7,141	N1B	1107	1.15	115	95.4	34.133	460	
		1800	404/5TS	100180T3G404TS	7,141	N1B	1083	1.15	115	95.4	31.141	460	
		1800	404/5T	100180T3GRB404T	7,141	N1B	1110	1.15	115	95.4	34.133	460	14
		1800	404/5TS	100180T3V404TS	7,141	N1B	1037	1.15	132	95.4	31.141	200/400	
		1200	444/5T	100120T3E444T	11,863	N1B	1521	1.15	125	95.0	39.803	208-230/460	
		1200	444/5T	100120T3G444T	11,863	N1B	1662	1.15	125	95.0	39.803	460	
		3600	404/5TS	125360T3E404TS	8,826	N1B	1049	1.15	136	94.5	31.141	208-230/460	
		3600	404/5TS	125360T3G404TS	8,826	N1B	1049	1.15	136	94.5	31.141	460	
		3600	404/5TS	125360T3H404TS	8,826	N1B	1050	1.15	109	94.5	31.141	575	
		1800	404/5T	125180T3E405T	7,981	N1B	1189	1.15	142	95.4	34.133	208-230/460	
		1800	404/5TS	125180T3E405TS	7,981	N1B	1165	1.15	142	95.4	31.141	208-230/460	
125	90	1800	404/5T	125180T3ERB405T	7,981	N1B	1207	1.15	142	95.4	34.133	208-230/460	14
		1800	404/5T	125180T3G405T	7,981	N1B	1186	1.15	142	95.4	34.133	460	
		1800	404/5TS	125180T3G405TS	7,981	N1B	1162	1.15	142	95.4	31.141	460	
		1800	404/5T	125180T3GRB405T	7,981	N1B	1189	1.15	142	95.4	34.133	460	14
		1800	404/5T	125180T3H405T	7,981	N1B	1186	1.15	114	95.4	34.133	575	
		1200	444/5T	125120T3G445T	12,753	N1B	1602	1.15	158	95.0	39.803	460	
		3600	404/5TS	150360T3G405TS	11,416	N1B	1114	1.15	162	94.5	31.141	460	
		3600	404/5TS	150360T3H405TS	11,416	N1B	1113	1.15	130	94.5	31.141	575	
		1800	444/5T	150180T3G444T	10,668	N1B	1609	1.15	166	95.8	39.803	460	
150	110	1800	444/5TS	150180T3G444TS	10,668	N1B	1537	1.15	166	95.8	36.062	460	
		1800	444/5T	150180T3GRB444T	10,668	N1B	1619	1.15	166	95.8	39.803	460	14
		1800	444/5T	150180T3H444T	10,668	N1B	1610	1.15	133	95.8	39.803	575	
		1200	444/5T	150120T3G445T	13,615	N1B	1712	1.15	183	95.4	39.803	460	
		3600	444/5TS	200360T3G444TS	14,504	N1B	1497	1.15	223	95.0	36.062	460	
		3600	444/5TS	200360T3H444TS	14,504	N1B	1482	1.15	178	95.0	36.062	575	
		1800	444/5T	200180T3G445T	13,004	N1B	1577	1.15	223	95.8	39.803	460	
200	150	1800	444/5TS	200180T3G445TS	13,004	N1B	1546	1.15	223	95.8	36.062	460	
		1800	444/5T	200180T3GRB445T	13,004	N1B	1587	1.15	223	95.8	39.803	460	14
		1200	447/9T	200120T3G447/9T	23,380	N1B	2203	1.15	241	95.4	48.317	460	

Continued on next page

Refer to electrical and mechanical data sections for additional technical information. Please refer to back cover for description of "NOTES"

For detailed specifications, data sheets, drawings and performance curves visit http://catalog.wegelectric.com

ODP – Foot Mount *continued*

HP	kW	RPM	NEMA Frame	Catalog Number	List Price	Mult. Symbol	Approx. Shipping Weight (lbs)	Service Factor	FL Amps @ High	FL. Eff (%)	"C" Dimension (in)	Voltage (V)	Notes
250	185	3600	444/5TS	250360P3G445TS	15,654	W1B	1599	1.15	272	95.0	36.062	460	30
		3600	444/5TS	250360P3Q445TS	15,654	W1B	1599	1.15	272	95.0	36.062	460	30
		3600	444/5TS	250360T3G445TS	18,983	N1B	1602	1.15	272	95.0	36.062	460	
		3600	444/5TS	250360T3H445TS	18,983	N1B	1982	1.15	218	95.0	36.062	575	
		1800	444/5T	250180P3E445T	13,358	W1B	2302	1.15	273	95.4	39.803	208-230/460	30
		1800	444/5T	250180P3G445T	13,358	W1B	1664	1.15	273	95.4	39.803	460	30
		1800	444/5TS	250180P3G445TS	13,358	W1B	1637	1.15	273	95.4	36.062	460	30
		1800	444/5T	250180P3Q445T	13,358	W1B	2302	1.15	273	95.4	39.803	460	30
		1800	444/5T	250180T3G445T	15,513	N1B	1730	1.15	275	95.8	39.803	460	
		1800	444/5TS	250180T3G445TS	15,513	N1B	1658	1.15	275	95.8	36.062	460	
		1800	444/5T	250180T3GRB445T	15,513	N1B	1746	1.15	275	95.8	39.803	460	14
		1800	444/5T	250180T3H445T	15,513	N1B	1729	1.15	220	95.8	39.803	575	
		1200	447/9T	250120P3G447/9T	23,904	W1B	2590	1.15	300	95.4	48.317	460	30
		1200	447/9T	250120T3G447/9T	27,249	N1B	1895	1.15	300	95.4	48.317	460	
300	220	3600	444/5TS	300360P3G445TS	19,556	W1B	1690	1.15	323	95.0	36.062	460	30
		3600	444/5TS	300360P3Q445TS	19,556	W1B	1679	1.15	323	95.0	36.062	460	30
		3600	444/5TS	300360T3G445TS	22,294	N1B	1699	1.15	322	95.4	36.062	460	
		1800	447/9T	300180P3G447/9T	19,168	W1B	2339	1.15	325	95.5	48.317	460	30
		1800	447/9TS	300180P3G447/9TS	19,168	W1B	2053	1.15	325	95.5	44.567	460	30
		1800	447/9T	300180T3G447/9T	24,878	N1B	2111	1.15	324	95.8	48.317	460	
		1800	447/9TS	300180T3G447/9TS	24,878	N1B	2053	1.15	324	95.8	44.567	460	
		1200	447/9T	300120P3G447/9T	26,188	W1B	2810	1.15	357	95.4	48.317	460	30
		1200	447/9T	300120T3G447/9T	29,853	N1B	2809	1.15	357	95.4	48.317	460	
350	260	3600	447/9TS	350360P3G447/9TS	22,346	W1B	2067	1.15	386	95.0	44.567	460	30
		3600	447/9TS	350360T3G447/9TS	25,055	N1B	2067	1.15	384	95.4	44.567	460	
		1800	447/9T	350180P3G447/9T	22,807	W1B	2282	1.15	384	95.5	48.317	460	30
		1800	447/9TS	350180P3G447/9TS	22,807	W1B	2220	1.15	384	95.5	44.567	460	30
		1800	447/9T	350180T3G447/9T	25,174	N1B	2284	1.15	383	95.8	48.317	460	
		1800	447/9TS	350180T3G447/9TS	25,174	N1B	2204	1.15	383	95.8	44.567	460	
400	300	3600	447/9TS	400360P3G447/9TS	24,140	W1B	2152	1.15	443	95.4	44.567	460	30
		3600	447/9TS	400360T3G447/9TS	26,678	N1B	2162	1.15	442	95.8	44.567	460	
		1800	447/9T	400180P3G447/9T	25,570	W1B	2054	1.15	443	95.5	48.317	460	30
		1800	447/9TS	400180P3G447/9TS	25,570	W1B	2700	1.15	443	95.5	44.567	460	30
		1800	447/9T	400180T3G447/9T	28,311	N1B	2509	1.15	442	95.8	48.317	460	
		1800	447/9TS	400180T3G447/9TS	28,311	N1B	2446	1.15	442	95.8	44.567	460	
450	330	3600	447/9TS	450360P3G447/9TS	26,055	W1B	2261	1.15	480	95.8	44.567	460	30
		3600	447/9TS	450360T3G447/9TS	28,239	N1B	2252	1.15	478	96.2	44.567	460	
500	370	3600	447/9TS	500360P3G447/9TS	27,711	W1B	2341	1.15	539	95.8	44.567	460	30
		3600	447/9TS	500360T3G447/9TS	31,476	N1B	2342	1.15	536	96.2	44.567	460	
550	410	3600	447/9TS	550360T3G447/9TS	32,629	N1B	2422	1.15	580	96.2	44.567	460	
600	450	3600	447/9TS	600360P3G447/9TS	28,951	W1B	2059	1.15	641	95.8	44.567	460	30
		3600	447/9TS	600360T3G447/9TS	32,994	N1B	2498	1.15	638	96.2	44.567	460	

Refer to electrical and mechanical data sections for additional technical information. Please refer to back cover for description of "NOTES"

For detailed specifications, data sheets, drawings and performance curves visit http://catalog.wegelectric.com

Data subject to change without notice.



ODP – C-Face – Foot Mount

HP	kW	RPM	NEMA Frame	Catalog Number	List Price	Mult. Symbol	Approx. Shipping Weight (lbs)	Service Factor	FL Amps @ High	FL. Eff (%)	"C" Dimension (in)	Voltage (V)	Notes
1	0.75	1800	E143/5TC	00118OT3E143TC	424	N1B	51	1.15	1.45	85.5	12.047	208-230/460	9
		1800	143/5TC	00118OT3E143TC-S	424	N1B	39	1.15	1.51	85.5	11.575	208-230/460	9
		1800	E143/5TC	00118OT3H143TC	424	N1B	51	1.15	1.16	85.5	12.047	575	9
		1800	143/5TC	00118OT3H143TC-S	424	N1B	39	1.15	1.21	85.5	11.575	575	9
1.5	1.1	3600	E143/5TC	00156OT3E143TC	476	N1B	43	1.15	1.90	85.5	12.047	208-230/460	9
		3600	143/5TC	00156OT3E143TC-S	476	N1B	34	1.15	1.85	84	11.575	208-230/460	9
		3600	E143/5TC	00156OT3H143TC	476	N1B	43	1.15	1.52	85.5	12.047	575	9
		3600	143/5TC	00156OT3H143TC-S	476	N1B	34	1.15	1.48	84	11.575	575	9
		1800	E143/5TC	00158OT3E145TC	483	N1B	59	1.15	2.20	86.5	12.047	208-230/460	9
		1800	143/5TC	00158OT3E145TC-S	483	N1B	47	1.15	2.07	86.5	12.362	208-230/460	9
		1800	E143/5TC	00158OT3H145TC	483	N1B	59	1.15	1.76	86.5	12.047	575	9
		1800	143/5TC	00158OT3H145TC-S	483	N1B	47	1.15	1.66	86.5	12.362	575	9
2	1.5	3600	E143/5TC	00236OT3E145TC	521	N1B	46	1.15	2.50	86.5	12.047	208-230/460	9
		3600	143/5TC	00236OT3E145TC-S	521	N1B	42	1.15	2.42	85.5	11.969	208-230/460	9
		3600	E143/5TC	00236OT3H145TC	521	N1B	46	1.15	2.00	86.5	12.047	575	9
		3600	143/5TC	00236OT3H145TC-S	521	N1B	42	1.15	1.94	85.5	11.969	575	9
		1800	E143/5TC	00218OT3E145TC	526	N1B	59	1.15	2.90	86.5	12.047	208-230/460	9
		1800	143/5TC	00218OT3E145TC-S	526	N1B	44	1.15	2.69	86.5	12.362	208-230/460	9
		1800	E143/5TC	00218OT3H145TC	526	N1B	59	1.15	2.32	86.5	12.047	575	9
		1800	143/5TC	00218OT3H145TC-S	526	N1B	44	1.15	2.15	86.5	12.362	575	9
		1200	184TC	00212OT3E184TC	635	N1B	80	1.15	3.03	87.5	14.291	208-230/460	9
		1200	182/4TC	00212OT3E184TC-S	635	N1B	73	1.15	2.95	87.5	14.744	208-230/460	9
		1200	184TC	00212OT3H184TC	635	N1B	66	1.15	2.42	87.5	14.291	575	9
		1200	182/4TC	00212OT3H184TC-S	635	N1B	73	1.15	2.36	87.5	14.744	575	9
3	2.2	3600	F143/5TC	00336OT3E145TC	579	N1B	52	1.15	3.50	86.5	12.835	208-230/460	9
		3600	143/5TC	00336OT3E145TC-S	579	N1B	45	1.15	3.59	85.5	12.362	208-230/460	9
		3600	F143/5TC	00336OT3H145TC	579	N1B	52	1.15	2.80	86.5	12.835	575	9
		3600	143/5TC	00336OT3H145TC-S	579	N1B	45	1.15	2.87	85.5	12.362	575	9
		1800	182TC	00318OT3E182TC	562	N1B	69	1.15	4.06	89.5	13.504	208-230/460	9
		1800	182/4TC	00318OT3E182TC-S	562	N1B	73	1.15	3.86	89.5	15.138	208-230/460	9
		1800	182TC	00318OT3H182TC	562	N1B	69	1.15	3.25	89.5	13.504	575	9
		1800	182/4TC	00318OT3H182TC-S	562	N1B	73	1.15	3.09	89.5	15.138	575	9
		1800	182TC	00318OT3V182TC	562	N1B	69	1.15	4.67	89.5	13.504	200/400	9
		1800	182/4TC	00318OT3V182TC-S	562	N1B	73	1.15	4.43	89.5	15.138	200/400	9
		1200	213/5TC	00312OT3E213TC	826	N1B	113	1.15	4.27	88.5	17.165	208-230/460	9
		1200	213/5TC	00312OT3E213TC-S	826	N1B	110	1.15	4.16	88.5	16.575	208-230/460	9
		1200	213/5TC	00312OT3H213TC	826	N1B	73	1.15	3.42	88.5	17.165	575	9
		1200	213/5TC	00312OT3H213TC-S	826	N1B	110	1.15	3.33	88.5	16.575	575	9

Continued on next page

Refer to electrical and mechanical data sections for additional technical information. Please refer to back cover for description of "NOTES"

For detailed specifications, data sheets, drawings and performance curves visit http://catalog.wegelectric.com

ODP – C-Face – Foot Mount *continued*

HP	kW	RPM	NEMA Frame	Catalog Number	List Price	Mult. Symbol	Approx. Shipping Weight (lbs)	Service Factor	FL Amps @ High	FL. Eff (%)	"C" Dimension (in)	Voltage (V)	Notes
5	3.7	3600	182TC	00536OT3E182TC	689	N1B	68	1.15	6.17	88.5	13.504	208-230/460	9
		3600	182/4TC	00536OT3E182TC-S	689	N1B	66	1.15	6.10	86.5	14.764	208-230/460	9
		3600	182TC	00536OT3H182TC	689	N1B	68	1.15	4.94	88.5	13.504	575	9
		3600	182/4TC	00536OT3H182TC-S	689	N1B	66	1.15	4.88	86.5	14.764	575	9
		1800	184TC	00518OT3E184TC	668	N1B	80	1.15	6.41	89.5	14.291	208-230/460	9
		1800	182/4TC	00518OT3E184TC-S	668	N1B	87	1.15	6.33	89.5	16.319	208-230/460	9
		1800	184TC	00518OT3H184TC	668	N1B	79	1.15	5.13	89.5	14.291	575	9
		1800	182/4TC	00518OT3H184TC-S	668	N1B	87	1.15	5.06	89.5	16.319	575	9
		1200	213/5TC	00512OT3E215TC	1,108	N1B	125	1.15	6.92	89.5	17.165	208-230/460	9
		1200	213/5TC	00512OT3E215TC-S	1,108	N1B	129	1.15	6.74	89.5	16.969	208-230/460	9
		1200	213/5TC	00512OT3H215TC	1,108	N1B	71	1.15	5.54	89.5	17.165	575	9
		1200	213/5TC	00512OT3H215TC-S	1,108	N1B	129	1.15	5.39	89.5	16.969	575	9
7.5	5.5	3600	184TC	00736OT3E184TC	958	N1B	77	1.15	8.97	88.5	14.291	208-230/460	9
		3600	182/4TC	00736OT3E184TC-S	958	N1B	77	1.15	8.67	88.5	15.138	208-230/460	9
		3600	184TC	00736OT3H184TC	958	N1B	77	1.15	7.18	88.5	14.291	575	9
		3600	182/4TC	00736OT3H184TC-S	958	N1B	77	1.15	6.93	88.5	15.138	575	9
		1800	213/5TC	00718OT3E213TC	961	N1B	117	1.15	9.03	91.0	17.165	208-230/460	9
		1800	213/5TC	00718OT3E213TC-S	961	N1B	128	1.15	9.14	91	16.575	208-230/460	9
		1800	213/5TC	00718OT3H213TC	961	N1B	115	1.15	7.22	91.0	17.165	575	9
		1800	213/5TC	00718OT3H213TC-S	961	N1B	128	1.15	7.31	91	16.575	575	9
		1800	213/5TC	00718OT3V213TC	961	N1B	117	1.15	10.4	91.0	17.165	200/400	9
		1800	213/5TC	00718OT3V213TC-S	961	N1B	128	1.15	10.5	91	16.575	200/400	9
		1200	254TC	00712OT3E254TC	1,535	N1B	250	1.15	9.69	90.2	20.669	208-230/460	
		1200	254/6TC	00712OT3E254TC-S	1,535	N1B	231	1.15	10.2	90.2	20.472	208-230/460	9
		1200	254TC	00712OT3H254TC	1,535	N1B	255	1.15	7.75	90.2	20.669	575	
		1200	254/6TC	00712OT3H254TC-S	1,535	N1B	231	1.15	8.20	90.2	20.472	575	9
10	7.5	3600	213/5TC	01036OT3E213TC	1,132	N1B	139	1.15	11.9	90.2	17.165	208-230/460	9
		3600	213/5TC	01036OT3E213TC-S	1,132	N1B	128	1.15	12.0	89.5	16.969	208-230/460	9
		3600	213/5TC	01036OT3H213TC	1,132	N1B	139	1.15	9.49	90.2	17.165	575	9
		3600	213/5TC	01036OT3H213TC-S	1,132	N1B	128	1.15	9.60	89.5	16.969	575	9
		1800	213/5TC	01018OT3E215TC	1,153	N1B	146	1.15	12.2	91.7	17.165	208-230/460	9
		1800	213/5TC	01018OT3E215TC-S	1,153	N1B	149	1.15	12.4	91.7	17.756	208-230/460	9
		1800	213/5TC	01018OT3H215TC	1,153	N1B	145	1.15	9.76	91.7	17.165	575	9
		1800	213/5TC	01018OT3H215TC-S	1,153	N1B	149	1.15	9.90	91.7	17.756	575	9
		1200	256TC	01012OT3E256TC	1,785	N1B	284	1.15	13.0	91.7	22.401	208-230/460	
		1200	254/6TC	01012OT3E256TC-S	1,785	N1B	254	1.15	13.9	91.7	20.472	208-230/460	9
		1200	256TC	01012OT3H256TC	1,785	N1B	276	1.15	10.4	91.7	22.401	575	
		1200	254/6TC	01012OT3H256TC-S	1,785	N1B	254	1.15	11.1	91.7	20.472	575	9

Continued on next page

Refer to electrical and mechanical data sections for additional technical information. Please refer to back cover for description of "NOTES"

For detailed specifications, data sheets, drawings and performance curves visit http://catalog.wegelectric.com

Data subject to change without notice.

ODP – C-Face – Foot Mount *continued*

HP	kW	RPM	NEMA Frame	Catalog Number	List Price	Mult. Symbol	Approx. Shipping Weight (lbs)	Service Factor	FL Amps @ High	FL. Eff (%)	"C" Dimension (in)	Voltage (V)	Notes
15	11	3600	213/5TC	01536OT3E215TC	1,543	N1B	141	1.15	17.4	91.0	17.165	208-230/460	9
		3600	213/5TC	01536OT3E215TC-S	1,543	N1B	143	1.15	17.2	90.2	17.756	208-230/460	9
		3600	213/5TC	01536OT3H215TC	1,543	N1B	140	1.15	13.9	91.0	17.165	575	9
		3600	213/5TC	01536OT3H215TC-S	1,543	N1B	143	1.15	13.8	90.2	17.756	575	9
		3600	213/5TC	01536OT3V215TC	1,543	N1B	141	1.15	20.0	91.0	17.165	200/400	9
		3600	213/5TC	01536OT3V215TC-S	1,543	N1B	143	1.15	19.8	90.2	17.756	200/400	9
		1800	254TC	01518OT3E254TC	1,545	N1B	263	1.15	18.6	93.0	20.669	208-230/460	
		1800	254/6TC	01518OT3E254TC-S	1,545	N1B	220	1.15	18.3	93	20.472	208-230/460	9
		1800	254TC	01518OT3H254TC	1,545	N1B	264	1.15	14.9	93.0	20.669	575	
		1800	254/6TC	01518OT3H254TC-S	1,545	N1B	220	1.15	14.7	93	20.472	575	9
		1800	254TC	01518OT3V254TC	1,545	N1B	263	1.15	21.4	93.0	20.669	200/400	
		1800	254/6TC	01518OT3V254TC-S	1,545	N1B	220	1.15	21.1	93	20.472	200/400	9
		1200	284TC	01512OT3E284TC	2,497	N1B	400	1.15	17.7	91.7	23.386	208-230/460	
		1200	284TC	01512OT3H284TC	2,497	N1B	400	1.15	14.2	91.7	23.386	575	
20	15	3600	254TC	02036OT3E254TC	1,828	N1B	222	1.15	24.6	91.0	20.669	208-230/460	
		3600	254/6TC	02036OT3E254TC-S	1,828	N1B	196	1.15	23.8	91	20.472	208-230/460	9
		3600	254TC	02036OT3H254TC	1,828	N1B	222	1.15	19.7	91.0	20.669	575	
		3600	254/6TC	02036OT3H254TC-S	1,828	N1B	196	1.15	19.0	91	20.472	575	9
		1800	256TC	02018OT3E256TC	1,900	N1B	300	1.15	25.0	93.0	22.401	208-230/460	
		1800	254/6TC	02018OT3E256TC-S	1,900	N1B	243	1.15	24.7	93	20.472	208-230/460	9
		1800	256TC	02018OT3H256TC	1,900	N1B	301	1.15	20.0	93.0	22.401	575	
		1800	254/6TC	02018OT3H256TC-S	1,900	N1B	243	1.15	19.7	93	20.472	575	9
		1800	256TC	02018OT3V256TC	1,900	N1B	300	1.15	28.8	93.0	22.401	200/400	
		1800	254/6TC	02018OT3V256TC-S	1,900	N1B	243	1.15	28.4	93	20.472	200/400	9
		1200	286TC	02012OT3E286TC	3,119	N1B	370	1.15	24.0	92.4	24.882	208-230/460	
		1200	286TC	02012OT3H286TC	3,119	N1B	370	1.15	19.2	92.4	24.882	575	
25	18.5	3600	256TC	02536OT3E256TC	2,207	N1B	262	1.15	29.8	91.7	22.401	208-230/460	
		3600	254/6TC	02536OT3E256TC-S	2,207	N1B	219	1.15	29.1	91.7	20.472	208-230/460	9
		3600	256TC	02536OT3H256TC	2,207	N1B	263	1.15	23.8	91.7	22.401	575	
		3600	254/6TC	02536OT3H256TC-S	2,207	N1B	219	1.15	23.3	91.7	20.472	575	9
		1800	284TC	02518OT3E284TC	2,245	N1B	355	1.15	29.9	93.6	23.386	208-230/460	
		1800	284TC	02518OT3H284TC	2,245	N1B	356	1.15	23.9	93.6	23.386	575	
		1800	284TC	02518OT3V284TC	2,245	N1B	355	1.15	34.4	93.6	23.386	200/400	
30	22	3600	284TSC	03036OT3E284TSC	2,572	N1B	330	1.15	35.2	92.4	22.000	208-230/460	
		3600	284TSC	03036OT3H284TSC	2,572	N1B	329	1.15	28.2	92.4	22.000	575	
		1800	286TC	03018OT3E286TC	2,615	N1B	417	1.15	35.4	94.1	24.882	208-230/460	
		1800	286TC	03018OT3H286TC	2,615	N1B	416	1.15	28.3	94.1	24.882	575	
		1800	286TC	03018OT3V286TC	2,615	N1B	417	1.15	40.7	94.1	24.882	200/400	
		1200	326TC	03012OT3E326TC	3,990	N1B	593	1.15	36.0	93.6	27.667	208-230/460	

Continued on next page

Refer to electrical and mechanical data sections for additional technical information. Please refer to back cover for description of "NOTES"

For detailed specifications, data sheets, drawings and performance curves visit http://catalog.wegelectric.com

ODP – C-Face – Foot Mount *continued*

HP	kW	RPM	NEMA Frame	Catalog Number	List Price	Mult. Symbol	Approx. Shipping Weight (lbs)	Service Factor	FL Amps @ High	FL. Eff (%)	"C" Dimension (in)	Voltage (V)	Notes
40	30	3600	286TSC	040360T3E286TSC	3,393	N1B	372	1.15	47.1	93.0	23.504	208-230/460	
		3600	286TSC	040360T3H286TSC	3,393	N1B	372	1.15	37.7	93.0	23.504	575	
		1800	324TC	040180T3E324TC	3,195	N1B	568	1.15	48.2	94.1	26.181	208-230/460	
		1800	324TSC	040180T3E324TSC	3,195	N1B	574	1.15	48.2	94.1	24.685	208-230/460	
		1800	324TC	040180T3H324TC	3,195	N1B	567	1.15	38.6	94.1	26.181	575	
		1200	364/5TC	040120T3E364TC	5,938	N1B	939	1.15	48.2	94.1	29.764	208-230/460	
50	37	3600	324TSC	050360T3E324TSC	3,920	N1B	569	1.15	59.1	93.6	24.685	208-230/460	
		3600	324TSC	050360T3H324TSC	3,920	N1B	568	1.15	47.3	93.6	24.685	575	
		1800	326TC	050180T3E326TC	3,888	N1B	598	1.15	61.4	94.5	27.667	208-230/460	
		1800	326TSC	050180T3E326TSC	3,888	N1B	595	1.15	61.4	94.5	26.181	208-230/460	
		1800	326TC	050180T3H326TC	3,888	N1B	594	1.15	49.1	94.5	27.667	575	
		1200	364/5TC	050120T3E365TC	6,786	N1B	953	1.15	60.2	94.1	29.764	208-230/460	
60	45	3600	326TSC	060360T3E326TSC	4,681	N1B	567	1.15	71.0	93.6	26.181	208-230/460	
		1800	364/5TC	060180T3E364TC	4,837	N1B	910	1.15	69.9	95.0	29.764	208-230/460	
		1800	364/5TC	060180T3H364TC	4,837	N1B	908	1.15	55.9	95.0	29.764	575	
75	55	3600	364/5TSC	075360T3E364TSC	6,193	N1B	873	1.15	81.5	94.1	27.638	208-230/460	
		1800	364/5TC	075180T3E365TC	6,052	N1B	979	1.15	85.5	95.0	29.764	208-230/460	
		1800	364/5TC	075180T3H365TC	6,052	N1B	979	1.15	68.4	95.0	29.764	575	
100	75	1800	404/5TC	100180T3E404TC	7,587	N1B	1139	1.15	115	95.4	34.133	208-230/460	
		1800	404/5TSC	100180T3E404TSC	7,587	N1B	1116	1.15	115	95.4	31.141	208-230/460	
		1800	404/5TC	100180T3H404TC	7,587	N1B	1131	1.15	92.0	95.4	34.133	575	
		1800	404/5TSC	100180T3H404TSC	7,587	N1B	1108	1.15	92.0	95.4	31.141	575	
125	90	1800	404/5TC	125180T3E405TC	8,427	N1B	1217	1.15	142	95.4	34.133	208-230/460	
		1800	404/5TSC	125180T3E405TSC	8,427	N1B	1195	1.15	142	95.4	31.141	208-230/460	
		1800	404/5TC	125180T3G405TC	8,427	N1B	1214	1.15	142	95.4	34.133	460	
		1800	404/5TSC	125180T3G405TSC	8,427	N1B	1191	1.15	142	95.4	31.141	460	
150	110	1800	444/5TC	150180T3G444TC	11,228	N1B	1636	1.15	166	95.8	39.803	460	
		1800	444/5TSC	150180T3G444TSC	11,228	N1B	1595	1.15	166	95.8	36.062	460	
		1800	444/5TC	150180T3H444TC	11,228	N1B	1636	1.15	133	95.8	39.803	575	
200	150	1800	444/5TC	200180T3G445TC	13,564	N1B	1605	1.15	223	95.8	39.803	460	
250	185	1800	444/5TC	250180T3G445TC	16,073	N1B	1758	1.15	275	95.8	39.803	460	

Refer to electrical and mechanical data sections for additional technical information. Please refer to back cover for description of "NOTES"

For detailed specifications, data sheets, drawings and performance curves visit http://catalog.wegelectric.com

Data subject to change without notice.

Three-Phase General Purpose Motors

IEEE 841 - THREE PHASE

TEFC - NEMA Premium



WEG's IEEE841 motors are specially suited for Pulp & Paper mills, Steel mills, Petrochemical Plants and diverse demanding applications requiring severe duty long life motors.

WEG's W22 cast iron platform has an improved cooling system and solid feet for cooler operation and reduced vibration and noise extending the life of the motor.

Standard Features:

- Class F insulation (Impregnation Resin and magnet wire are class H)
- F1 Mounted (F2 convertible). Frames 447T and up can easily be F2 converted by simply rotating the terminal box adapter
- Stainless Steel Nameplate - Laser etched with high contrast background
- All frames with regreasable ball bearings
- Class I, Div. 2, Groups A, B, C & D – T3, Class II, Div 2, Groups F & G – T3C

Inverter Rated:
1000:1 for variable torque
20:1 for constant torque

** Frame 586/7 250HP and up 6:1 CT and 1000:1 VT*

Features that make a difference:

- 1.25 service factor up to 100 HP
- InproSeal Bearing Isolators both ends
- Bearing protection meets IP56
- Rubber lead separator between terminal box and frame
- Vibration: 0.04 inches per second or less
- Guaranteed foot flatness to within 0.005"
- Bearing life 50,000 hours (L-10)
- Epoxy Paint system exceeds 250hrs Salt Fog test
- Interior surfaces are epoxy coated
- Non-sparking fan
- NPT Threaded terminal box
- Seamless copper lead lugs
- Seamless Stainless Steel grease extension tubes
- Automatic grease relief fittings
- IEEE 841 Test Report in conduit box
- Suitable for IEEE45 and USCG 259 – Marine Duty

ADDITIONAL TECHNICAL DATA

ELECTRICAL DATA: **p. B-6**

MECHANICAL DATA: **p. C-2**

Three-Phase General Purpose Motors

IEEE 841 - Three-Phase



TEFC – Foot Mount – NEMA Premium

HP	kW	RPM	NEMA Frame	Catalog Number	List Price	Mult. Symbol	Approx. Shipping Weight (lbs)	Service Factor	FL Amps @ High	FL. Eff (%)	"C" Dimension (in)	Voltage (V)	Notes
		1800	143/5T	00118ST3HIE143T-W22	922	I1	43	1.25	1.13	85.5	13.346	575	
		1800	143/5T	00118ST3QIE143T-W22	922	I1	43	1.25	1.41	85.5	13.346	460	
1	0.75	1200	143/5T	00112ST3HIE145T-W22	1,062	I1	61	1.25	1.38	82.5	13.346	575	
		1200	143/5T	00112ST3QIE145T-W22	1,062	I1	60	1.25	1.73	82.5	13.346	460	
		900	182/4T	00109ST3QIE182T-W22	2,006	I1	98	1.25	2.30	78.5	15.860	460	
		3600	143/5T	00156ST3HIE143T-W22	981	I1	43	1.25	1.53	84.0	13.346	575	
		3600	143/5T	00156ST3QIE143T-W22	981	I1	56	1.25	1.91	84.0	13.346	460	
		1800	143/5T	00158ST3HIE145T-W22	981	I1	59	1.25	1.62	86.5	13.346	575	
1.5	1.1	1800	143/5T	00158ST3QIE145T-W22	981	I1	60	1.25	2.02	86.5	13.346	460	
		1200	182/4T	00152ST3HIE182T-W22	1,286	I1	74	1.25	1.91	87.5	15.860	575	
		1200	182/4T	00152ST3QIE182T-W22	1,286	I1	74	1.25	2.39	87.5	15.860	460	
		900	182/4T	00159ST3QIE184T-W22	2,016	I1	112	1.25	2.70	82.5	15.860	460	
		3600	143/5T	00236ST3HIE145T-W22	1,023	I1	56	1.25	2.02	85.5	13.346	575	
		3600	143/5T	00236ST3QIE145T-W22	1,023	I1	58	1.25	2.53	85.5	13.346	460	
		1800	143/5T	00218ST3HIE145T-W22	1,023	I1	61	1.25	2.09	86.5	13.346	575	
2	1.5	1800	143/5T	00218ST3QIE145T-W22	1,023	I1	61	1.25	2.61	86.5	13.346	460	
		1200	182/4T	00212ST3HIE184T-W22	1,363	I1	117	1.25	2.58	88.5	15.860	575	
		1200	182/4T	00212ST3QIE184T-W22	1,363	I1	117	1.25	3.23	88.5	15.860	460	
		900	213/5T	00209ST3QIE213T-W22	2,701	I1	154	1.25	3.39	85.5	19.517	460	
		3600	182/4T	00336ST3HIE182T-W22	1,267	I1	92	1.25	2.90	86.5	15.860	575	
		3600	182/4T	00336ST3QIE182T-W22	1,267	I1	108	1.25	3.63	86.5	15.860	460	
		1800	182/4T	00318ST3HIE182T-W22	1,224	I1	94	1.25	3.10	89.5	15.860	575	
3	2.2	1800	182/4T	00318ST3QIE182T-W22	1,224	I1	94	1.25	3.88	89.5	15.860	460	
		1200	213/5T	00312ST3HIE213T-W22	1,537	I1	126	1.25	3.53	89.5	19.517	575	
		1200	213/5T	00312ST3QIE213T-W22	1,537	I1	126	1.25	4.41	89.5	19.517	460	
		900	213/5T	00309ST3QIE215T-W22	2,883	I1	200	1.25	4.56	85.5	19.517	460	
		3600	182/4T	00536ST3HIE184T-W22	1,429	I1	117	1.25	4.72	88.5	15.860	575	
		3600	182/4T	00536ST3QIE184T-W22	1,429	I1	117	1.25	5.90	88.5	15.860	460	
		1800	182/4T	00518ST3HIE184T-W22	1,371	I1	112	1.25	5.16	89.5	15.860	575	
5	3.7	1800	182/4T	00518ST3QIE184T-W22	1,371	I1	113	1.25	6.45	89.5	15.860	460	
		1200	213/5T	00512ST3HIE215T-W22	1,901	I1	190	1.25	5.46	89.5	19.517	575	
		1200	213/5T	00512ST3QIE215T-W22	1,901	I1	190	1.25	6.83	89.5	19.517	460	
		900	254/6T	00509ST3QIE254T-W22	4,243	I1	278	1.25	7.58	87.5	24.945	460	
		3600	213/5T	00736ST3HIE213T-W22	1,751	I1	168	1.25	7.01	89.5	19.517	575	
		3600	213/5T	00736ST3QIE213T-W22	1,751	I1	144	1.25	8.76	89.5	19.517	460	
		1800	213/5T	00718ST3HIE213T-W22	1,646	I1	159	1.25	7.20	91.7	19.517	575	
7.5	5.5	1800	213/5T	00718ST3QIE213T-W22	1,646	I1	186	1.25	9.00	91.7	19.517	460	
		1200	254/6T	00712ST3HIE254T-W22	2,544	I1	282	1.25	7.58	91.0	24.945	575	
		1200	254/6T	00712ST3QIE254T-W22	2,544	I1	282	1.25	9.48	91.0	24.945	460	
		900	254/6T	00709ST3QIE256T-W22	5,040	I1	313	1.25	11.1	87.5	24.945	460	

Continued on next page

Refer to electrical and mechanical data sections for additional technical information. Please refer to back cover for description of "NOTES"

For detailed specifications, data sheets, drawings and performance curves visit http://catalog.wegelectric.com

Data subject to change without notice.

TEFC – Foot Mount – NEMA Premium *continued*

HP	kW	RPM	NEMA Frame	Catalog Number	List Price	Mult. Symbol	Approx. Shipping Weight (lbs)	Service Factor	FL Amps @ High	FL. Eff (%)	"C" Dimension (in)	Voltage (V)	Notes
		3600	213/5T	01036ST3HIE215T-W22	1,920	I1	190	1.25	9.28	90.2	19.517	575	
		3600	213/5T	01036ST3QIE215T-W22	1,920	I1	190	1.25	11.6	90.2	19.517	460	
		1800	213/5T	01018ST3HIE215T-W22	1,760	I1	196	1.25	9.92	91.7	19.517	575	
10	7.5	1800	213/5T	01018ST3QIE215T-W22	1,760	I1	197	1.25	12.4	91.7	19.517	460	
		1200	254/6T	01012ST3HIE256T-W22	2,834	I1	308	1.25	10.3	91.0	24.945	575	
		1200	254/6T	01012ST3QIE256T-W22	2,834	I1	321	1.25	12.9	91.0	24.945	460	
		900	284/6T	01009ST3QIE284T-W22	5,936	I1	366	1.25	13.4	90.2	27.929	460	
		3600	254/6T	01536ST3HIE254T-W22	2,428	I1	256	1.25	13.8	91.0	24.945	575	
		3600	254/6T	01536ST3QIE254T-W22	2,428	I1	256	1.25	17.2	91.0	24.945	460	
		1800	254/6T	01518ST3HIE254T-W22	2,257	I1	271	1.25	14.4	92.4	24.945	575	
15	11	1800	254/6T	01518ST3QIE254T-W22	2,257	I1	271	1.25	18.0	92.4	24.945	460	
		1200	284/6T	01512ST3HIE284T-W22	4,203	I1	406	1.25	14.3	91.7	27.929	575	
		1200	284/6T	01512ST3QIE284T-W22	4,203	I1	407	1.25	17.9	91.7	27.929	460	
		900	284/6T	01509ST3QIE286T-W22	6,742	I1	434	1.25	19.4	90.2	27.929	460	
		3600	254/6T	02036ST3HIE256T-W22	2,957	I1	315	1.25	18.6	91.0	24.945	575	
		3600	254/6T	02036ST3QIE256T-W22	2,957	I1	315	1.25	23.2	91.0	24.945	460	
		1800	254/6T	02018ST3HIE256T-W22	2,597	I1	364	1.25	19.3	93.0	24.945	575	
20	15	1800	254/6T	02018ST3QIE256T-W22	2,597	I1	365	1.25	24.1	93.0	24.945	460	
		1200	284/6T	02012ST3HIE286T-W22	4,773	I1	453	1.25	19.4	91.7	27.929	575	
		1200	284/6T	02012ST3QIE286T-W22	4,773	I1	453	1.25	24.2	91.7	27.929	460	
		900	324/6T	02009ST3QIE324T-W22	8,269	I1	542	1.25	28.3	91.0	31.116	460	
		3600	284/6TS	02536ST3HIE284TS-W22	3,368	I1	403	1.25	22.8	91.7	26.557	575	
		3600	284/6TS	02536ST3QIE284TS-W22	3,368	I1	400	1.25	28.5	91.7	26.557	460	
		1800	284/6T	02518ST3HIE284T-W22	2,926	I1	432	1.25	23.6	93.6	27.929	575	
25	18.5	1800	284/6T	02518ST3QIE284T-W22	2,926	I1	430	1.25	29.5	93.6	27.929	460	
		1200	324/6T	02512ST3HIE324T-W22	5,211	I1	579	1.25	24.3	93.0	31.116	575	
		1200	324/6T	02512ST3QIE324T-W22	5,211	I1	580	1.25	30.4	93.0	31.116	460	
		900	324/6T	02509ST3QIE326T-W22	8,838	I1	601	1.25	35.9	91.0	31.116	460	
		3600	284/6TS	03036ST3HIE286TS-W22	3,799	I1	419	1.25	27.0	91.7	26.557	575	
		3600	284/6TS	03036ST3QIE286TS-W22	3,799	I1	431	1.25	33.8	91.7	26.557	460	
		1800	284/6T	03018ST3HIE286T-W22	3,509	I1	483	1.25	28.1	93.6	27.929	575	
30	22	1800	284/6T	03018ST3QIE286T-W22	3,509	I1	483	1.25	35.1	93.6	27.929	460	
		1200	324/6T	03012ST3HIE326T-W22	5,359	I1	629	1.25	28.6	93.0	31.116	575	
		1200	324/6T	03012ST3QIE326T-W22	5,359	I1	631	1.25	35.8	93.0	31.116	460	
		900	364/5T	03009ST3QIE364T-W22	13,149	I1	907	1.25	37.0	92.4	34.251	460	

Continued on next page

Refer to electrical and mechanical data sections for additional technical information. Please refer to back cover for description of "NOTES"

For detailed specifications, data sheets, drawings and performance curves visit http://catalog.wegelectric.com

TEFC – Foot Mount – NEMA Premium *continued*

HP	kW	RPM	NEMA Frame	Catalog Number	List Price	Mult. Symbol	Approx. Shipping Weight (lbs)	Service Factor	FL Amps @ High	FL. Eff (%)	"C" Dimension (in)	Voltage (V)	Notes
40	30	3600	324/6TS	04036ST3HIE324TS-W22	5,306	I1	573	1.25	36.6	92.4	29.616	575	
		3600	324/6TS	04036ST3QIE324TS-W22	5,306	I1	569	1.25	45.8	92.4	29.616	460	
		1800	324/6T	04018ST3HIE324T-W22	4,692	I1	600	1.25	38.6	94.1	31.116	575	
		1800	324/6T	04018ST3QIE324T-W22	4,692	I1	602	1.25	48.2	94.1	31.116	460	
		1200	364/5T	04012ST3HIE364T-W22	8,636	I1	945	1.25	37.2	94.1	34.251	575	
		1200	364/5T	04012ST3QIE364T-W22	8,636	I1	947	1.25	46.5	94.1	34.251	460	
		900	364/5T	04009ST3QIE365T-W22	14,909	I1	985	1.25	50.0	92.4	34.251	460	
50	37	3600	324/6TS	05036ST3HIE326TS-W22	5,970	I1	610	1.25	44.9	93.0	29.616	575	
		3600	324/6TS	05036ST3QIE326TS-W22	5,970	I1	607	1.25	56.1	93.0	29.616	460	
		1800	324/6T	05018ST3HIE326T-W22	5,233	I1	642	1.25	47.4	94.5	31.116	575	
		1800	324/6T	05018ST3QIE326T-W22	5,233	I1	644	1.25	59.2	94.5	31.116	460	
		1200	364/5T	05012ST3HIE365T-W22	9,369	I1	989	1.25	45.9	94.1	34.251	575	
		1200	364/5T	05012ST3QIE365T-W22	9,369	I1	997	1.25	57.4	94.1	34.251	460	
		900	404/5T	05009ST3QIE404T-W22	19,331	I1	1211	1.25	60.0	93.0	39.730	460	
60	45	3600	364/5TS	06036ST3HIE364TS-W22	8,665	I1	947	1.25	53.6	93.6	32.276	575	
		3600	364/5TS	06036ST3QIE364TS-W22	8,665	I1	949	1.25	67.0	93.6	32.276	460	
		1800	364/5T	06018ST3HIE364T-W22	8,044	I1	1013	1.25	54.6	95.0	34.251	575	
		1800	364/5T	06018ST3QIE364T-W22	8,044	I1	1016	1.25	68.3	95.0	34.251	460	
		1200	404/5T	06012ST3HIE404T-W22	11,790	I1	1184	1.25	55.6	94.5	39.730	575	
		1200	404/5T	06012ST3QIE404T-W22	11,790	I1	1188	1.25	69.5	94.5	39.730	460	
		900	404/5T	06009ST3QIE405T-W22	22,579	I1	1269	1.25	73.0	93.0	39.730	460	
75	55	3600	364/5TS	07536ST3HIE365TS-W22	10,210	I1	972	1.25	65.5	93.6	32.276	575	
		3600	364/5TS	07536ST3QIE365TS-W22	10,210	I1	965	1.25	81.9	93.6	32.276	460	
		1800	364/5T	07518ST3HIE365T-W22	9,289	I1	1021	1.25	67.3	95.4	34.251	575	
		1800	364/5T	07518ST3QIE365T-W22	9,289	I1	1022	1.25	84.1	95.4	34.251	460	
		1200	404/5T	07512ST3HIE405T-W22	12,866	I1	1220	1.25	67.9	94.5	39.730	575	
		1200	404/5T	07512ST3QIE405T-W22	12,866	I1	1222	1.25	84.9	94.5	39.730	460	
		1200	404/5T	07512ST3QIERB405T-W2	12,866	I1	1230	1.25	84.9	94.5	39.730	460	14
		900	444/5T	07509ST3QIE444T-W22	23,457	I1	1649	1.25	93.0	93.6	44.950	460	
100	75	3600	404/5TS	10036ST3HIE405TS-W22	12,806	I1	1182	1.25	88.0	94.1	36.732	575	
		3600	404/5TS	10036ST3QIE405TS-W22	12,806	I1	1183	1.25	110	94.1	36.732	460	
		1800	404/5T	10018ST3HIE405T-W22	12,471	I1	1271	1.25	88.8	95.4	39.730	575	
		1800	404/5T	10018ST3QIE405T-W22	12,471	I1	1278	1.25	111	95.4	39.730	460	
		1800	404/5T	10018ST3QIERB405T-W2	12,471	I1	1286	1.25	111	95.4	39.730	460	14
		1200	444/5T	10012ST3HIE444T-W22	17,993	I1	1827	1.25	96.8	95.0	44.950	575	
		1200	444/5T	10012ST3QIE444T-W22	17,933	I1	1837	1.25	121	95.0	44.950	460	
		1200	444/5T	10012ST3QIERB444T-W2	17,933	I1	1847	1.25	121	95.0	44.950	460	14
		900	444/5T	10009ST3QIE445T-W22	24,681	I1	1824	1.25	127	94.1	44.950	460	
		900	444/5T	10009ST3QIERB445T-W2	24,681	I1	1763	1.25	127	94.1	44.950	460	14

Continued on next page

Refer to electrical and mechanical data sections for additional technical information. Please refer to back cover for description of "NOTES"

For detailed specifications, data sheets, drawings and performance curves visit http://catalog.wegelectric.com

Data subject to change without notice.

TEFC – Foot Mount – NEMA Premium *continued*

HP	kW	RPM	NEMA Frame	Catalog Number	List Price	Mult. Symbol	Approx. Shipping Weight (lbs)	Service Factor	FL Amps @ High	FL. Eff (%)	"C" Dimension (in)	Voltage (V)	Notes
125	90	3600	444/5TS	12536ST3HIE444TS-W22	18,198	I1	1781	1.15	107	95.0	41.200	575	
		3600	444/5TS	12536ST3QIE444TS-W22	18,198	I1	1788	1.15	134	95.0	41.200	460	
		1800	444/5T	12518ST3HIE444T-W22	16,564	I1	1781	1.15	111	95.4	44.950	575	
		1800	444/5T	12518ST3QIE444T-W22	16,564	I1	1785	1.15	139	95.4	44.950	460	
		1800	444/5T	12518ST3QIERB444T-W2	16,564	I1	1802	1.15	139	95.4	44.950	460	14
		1200	444/5T	12512ST3HIE445T-W22	20,158	I1	1973	1.15	114	95.0	44.950	575	
		1200	444/5T	12512ST3QIE445T-W22	20,158	I1	1966	1.15	143	95.0	44.950	460	
		1200	444/5T	12512ST3QIERB445T-W2	20,158	I1	1984	1.15	143	95.0	44.950	460	14
		900	445/7T	12509ST3QIE447T-W22	29,733	I1	2212	1.15	151	94.5	48.701	460	
		900	445/7T	12509ST3QIERB447T-W2	29,733	I1	2248	1.15	151	94.5	48.701	460	14
150	110	3600	444/5TS	15036ST3HIE445TS-W22	21,433	I1	1892	1.15	129	95.0	41.200	575	
		3600	444/5TS	15036ST3QIE445TS-W22	21,433	I1	1893	1.15	161	95.0	41.200	460	
		1800	444/5T	15018ST3HIE445T-W22	18,587	I1	1868	1.15	136	95.8	44.950	575	
		1800	444/5T	15018ST3HIERB445T-W2	19,187	I1	1886	1.15	136	95.8	44.950	575	14
		1800	444/5T	15018ST3QIE445T-W22	18,587	I1	1873	1.15	170	95.8	44.950	460	
		1800	444/5T	15018ST3QIERB445T-W2	18,587	I1	1891	1.15	170	95.8	44.950	460	14
		1200	445/7T	15012ST3HIE447T-W22	23,181	I1	2463	1.15	141	95.8	48.701	575	
		1200	445/7T	15012ST3QIE447T-W22	23,181	I1	2460	1.15	176	95.8	48.701	460	
		1200	445/7T	15012ST3QIERB447T-W2	23,181	I1	2496	1.15	176	95.8	48.701	460	14
		900	445/7T	15009ST3QIE447T-W22	34,755	I1	2376	1.15	185	94.5	48.701	460	
		900	445/7T	15009ST3QIERB447T-W2	34,755	I1	2206	1.15	185	94.5	48.701	460	14
200	150	3600	445/7TS	20036ST3HIE447TS-W22	28,568	I1	2199	1.15	175	95.4	44.951	575	
		3600	445/7TS	20036ST3QIE447TS-W22	28,568	I1	2215	1.15	219	95.4	44.951	460	
		1800	445/7T	20018ST3HIE447T-W22	23,696	I1	2311	1.15	184	96.2	48.701	575	
		1800	445/7T	20018ST3QIE447T-W22	23,696	I1	2296	1.15	230	96.2	48.701	460	
		1800	445/7T	20018ST3QIERB447T-W2	23,696	I1	2063	1.15	230	96.2	48.701	460	14
		1200	447/9T	20012ST3HIE449T-W22	27,577	I1	2948	1.15	190	95.8	56.338	575	
		1200	447/9T	20012ST3HIERB449T-W2	27,557	I1	2936	1.15	190	95.8	56.338	575	14
		1200	447/9T	20012ST3QIE449T-W22	27,577	I1	2951	1.15	237	95.8	56.338	460	
		1200	447/9T	20012ST3QIERB449T-W2	27,557	I1	2969	1.15	237	95.8	56.338	460	14
		900	L447/9T	20009ST3QIE449T-W22	57,394	I1	3732	1.00	242	95.0	57.181	460	1
		900	L447/9T	20009ST3QIERB449T-W2	57,394	I1	3511	1.00	242	95.0	57.181	460	1;14
250	185	3600	447/9TS	25036ST3QIE449TS-W22	34,663	I1	2603	1.15	266	95.8	52.940	460	
		1800	447/9T	25018ST3QIE449T-W22	30,081	I1	2696	1.15	281	96.2	56.338	460	
		1800	447/9T	25018ST3QIERB449T-W2	30,081	I1	2683	1.15	281	96.2	56.338	460	14
		1200	447/9T	25012ST3QIE449T-W22	39,415	I1	3104	1.15	292	95.8	56.338	460	
		1200	447/9T	25012ST3QIERB449T-W2	39,415	I1	2702	1.15	292	95.8	56.338	460	14

Continued on next page

Refer to electrical and mechanical data sections for additional technical information. Please refer to back cover for description of "NOTES"

For detailed specifications, data sheets, drawings and performance curves visit http://catalog.wegelectric.com

TEFC – Foot Mount – NEMA Premium *continued*

HP	kW	RPM	NEMA Frame	Catalog Number	List Price	Mult. Symbol	Approx. Shipping Weight (lbs)	Service Factor	FL Amps @ High	FL. Eff (%)	"C" Dimension (in)	Voltage (V)	Notes
300	220	1800	447/9T	30018ST3QIE449T-W22	36,810	I1	2831	1.15	330	96.2	56.338	460	
		1800	447/9T	30018ST3QIERB449T-W2	36,810	I1	2545	1.15	330	96.2	56.338	460	14
		1200	L447/9T	30012ST3QIE449T-W22	44,648	I1	3565	1.15	351	95.8	57.181	460	
		1200	L447/9T	30012ST3QIERB449T-W2	44,648	I1	3571	1.15	351	95.8	57.181	460	14
350	260	1800	L447/9T	35018ST3QIE449T-W22	44,105	I1	3580	1.15	394	96.2	56.338	460	
		1800	L447/9T	35018ST3QIERB449T-W2	44,105	I1	3580	1.15	394	96.2	56.338	460	14
		1200	L447/9T	35012ST3QIE449T-W22	52,634	I1	3756	1.00	415	95.8	57.181	460	1
		1200	L447/9T	35012ST3QIERB449T-W2	52,634	I1	3756	1.00	415	95.8	57.181	460	1;14
400	300	1800	L447/9T	40018ST3QIE449T-W22	48,396	I1	3467	1.15	455	96.2	57.181	460	
		1800	L447/9T	40018ST3QIERB449T-W2	48,396	I1	3467	1.15	455	96.2	57.181	460	14
450	330	1800	L447/9T	45018ST3QIE449T-W22	51,797	I1	3578	1.15	501	96.2	57.181	460	
		1800	L447/9T	45018ST3QIERB449T-W2	51,749	I1	3578	1.15	501	96.2	57.181	460	14

Refer to electrical and mechanical data sections for additional technical information. Please refer to back cover for description of “NOTES”

For detailed specifications, data sheets, drawings and performance curves visit http://catalog.wegelectric.com

Data subject to change without notice.



Three-Phase General Purpose Motors

IEEE 841 - Three-Phase

TEFC – C-Flange – Foot Mount – NEMA Premium

HP	kW	RPM	NEMA Frame	Catalog Number	List Price	Mult. Symbol	Approx. Shipping Weight (lbs)	Service Factor	FL Amps @ High	FL. Eff (%)	"C" Dimension (in)	Voltage (V)	Notes
1	0.75	1800	143/5TC	00118ST3QIE143TC-W22	972	I1	52	1.25	1.41	85.5	13.346	460	
		1200	143/5TC	00112ST3QIE145TC-W22	1,112	I1	58	1.25	1.73	82.5	13.346	460	
1.5	1.1	3600	143/5TC	00156ST3QIE143TC-W22	1,031	I1	43	1.25	1.91	84.0	13.346	460	
		1800	143/5TC	00158ST3QIE145TC-W22	1,031	I1	58	1.25	2.02	86.5	13.346	460	
		1200	182/4TC	00152ST3QIE182TC-W22	1,351	I1	74	1.25	2.39	87.5	15.860	460	
		900	182/4TC	00159ST3QIE184TC-W22	2,081	I1	114	1.25	2.70	82.5	15.860	460	
2	1.5	3600	143/5TC	00236ST3QIE145TC-W22	1,073	I1	56	1.25	2.53	85.5	13.346	460	
		1800	143/5TC	00218ST3QIE145TC-W22	1,073	I1	59	1.25	2.61	86.5	13.346	460	
		1200	182/4TC	00212ST3QIE184TC-W22	1,428	I1	121	1.25	3.23	88.5	15.860	460	
		900	213/5TC	00209ST3QIE213TC-W22	2,781	I1	154	1.25	3.39	85.5	19.517	460	
3	2.2	3600	182/4TC	00336ST3QIE182TC-W22	1,332	I1	92	1.25	3.63	86.5	15.860	460	
		1800	182/4TC	00318ST3QIE182TC-W22	1,289	I1	94	1.25	3.88	89.5	15.860	460	
		1200	213/5TC	00312ST3QIE213TC-W22	1,617	I1	126	1.25	4.41	89.5	19.517	460	
		900	213/5TC	00309ST3QIE215TC-W22	2,963	I1	181	1.25	4.56	85.5	19.517	460	
5	3.7	3600	182/4TC	00536ST3QIE184TC-W22	1,494	I1	121	1.25	5.90	88.5	15.860	460	
		1800	182/4TC	00518ST3QIE184TC-W22	1,436	I1	116	1.25	6.45	89.5	15.860	460	
		1200	213/5TC	00512ST3QIE215TC-W22	1,981	I1	193	1.25	6.83	89.5	19.517	460	
		900	254/6TC	00509ST3QIE254TC-W22	4,363	I1	278	1.25	7.58	87.5	24.945	460	
7.5	5.5	3600	213/5TC	00736ST3QIE213TC-W22	1,831	I1	177	1.25	8.76	89.5	19.517	460	
		1800	213/5TC	00718ST3QIE213TC-W22	1,726	I1	159	1.25	9.00	91.7	19.517	460	
		1200	254/6TC	00712ST3QIE254TC-W22	2,664	I1	282	1.25	9.48	91.0	24.945	460	
		900	254/6TC	00709ST3QIE256TC-W22	5,160	I1	304	1.25	11.1	87.5	24.945	460	
10	7.5	3600	213/5TC	01036ST3QIE215TC-W22	2,000	I1	168	1.25	11.6	90.2	19.517	460	
		1800	213/5TC	01018ST3QIE215TC-W22	1,840	I1	200	1.25	12.4	91.7	19.517	460	
		1200	254/6TC	01012ST3QIE256TC-W22	2,954	I1	324	1.25	12.9	91.0	24.945	460	
		900	284/6TC	01009ST3QIE284TC-W22	6,136	I1	400	1.25	13.4	90.2	27.929	460	
15	11	3600	254/6TC	01536ST3QIE254TC-W22	2,548	I1	256	1.25	17.2	91.0	24.945	460	
		1800	254/6TC	01518ST3QIE254TC-W22	2,377	I1	344	1.25	18.0	92.4	24.945	460	
		1200	284/6TC	01512ST3QIE284TC-W22	4,403	I1	413	1.25	17.9	91.7	27.929	460	
		900	284/6TC	01509ST3QIE286TC-W22	6,942	I1	444	1.25	19.4	90.2	27.929	460	
20	15	3600	254/6TC	02036ST3QIE256TC-W22	3,077	I1	318	1.25	23.2	91.0	24.945	460	
		1800	254/6TC	02018ST3QIE256TC-W22	2,717	I1	368	1.25	24.1	93.0	24.945	460	
		1200	284/6TC	02012ST3QIE286TC-W22	4,973	I1	460	1.25	24.2	91.7	27.929	460	
		900	324/6TC	02009ST3QIE324TC-W22	8,494	I1	482	1.25	28.3	91.0	31.116	460	
25	18.5	3600	284/6TSC	02536ST3QIE284TSC-W2	3,568	I1	389	1.25	28.5	91.7	26.557	460	
		1800	284/6TC	02518ST3QIE284TC-W22	3,126	I1	434	1.25	29.5	93.6	27.929	460	
		1200	324/6TC	02512ST3QIE324TC-W22	5,436	I1	592	1.25	30.4	93.0	31.116	460	
		900	324/6TC	02509ST3QIE326TC-W22	9,063	I1	539	1.25	35.9	91.0	31.116	460	

Continued on next page

Note: Flanged motors on Cast Iron frame sizes 143/5 to 254/6 have non-NEMA BA dimension. Refer to mechanical section of this catalog for details.

Refer to electrical and mechanical data sections for additional technical information. Please refer to back cover for description of "NOTES"

For detailed specifications, data sheets, drawings and performance curves visit http://catalog.wegelectric.com

IEEE 841 - Three-Phase

TEFC – C-Flange – Foot Mount – NEMA Premium *continued*

HP	kW	RPM	NEMA Frame	Catalog Number	List Price	Mult. Symbol	Approx. Shipping Weight (lbs)	Service Factor	FL Amps @ High	FL. Eff (%)	"C" Dimension (in)	Voltage (V)	Notes
30	22	3600	284/6TSC	03036ST3QIE286TSC-W2	3,999	I1	419	1.25	33.8	91.7	26.557	460	
		1800	284/6TC	03018ST3QIE286TC-W22	3,709	I1	489	1.25	35.1	93.6	27.929	460	
		1200	324/6TC	03012ST3QIE326TC-W22	5,584	I1	643	1.25	35.8	93.0	31.116	460	
		900	364/5TC	03009ST3QIE364TC-W22	13,524	I1	917	1.25	37.0	92.4	34.251	460	
40	30	3600	324/6TSC	04036ST3QIE324TSC-W2	5,531	I1	577	1.25	45.8	94.1	29.616	460	
		1800	324/6TC	04018ST3QIE324TC-W22	4,917	I1	615	1.25	48.2	94.1	31.116	460	
		1200	364/5TC	04012ST3QIE364TC-W22	9,011	I1	947	1.25	46.5	94.1	34.251	460	
		900	364/5TC	04009ST3QIE365TC-W22	15,284	I1	1011	1.25	50.0	92.4	34.251	460	
50	37	3600	324/6TSC	05036ST3QIE326TSC-W2	6,195	I1	619	1.25	56.1	93.0	29.616	460	
		1800	324/6TC	05018ST3QIE326TC-W22	5,458	I1	653	1.25	59.2	94.5	31.116	460	
		1200	364/5TC	05012ST3QIE365TC-W22	9,744	I1	983	1.25	57.4	94.1	34.251	460	
		900	404/5TC	05009ST3QIE404TC-W22	19,856	I1	1132	1.25	60.0	93.0	39.730	460	
60	45	1200	404/5TC	06012ST3QIE404TC-W22	12,315	I1	1156	1.25	69.5	94.5	39.730	460	

Note: Flanged motors on Cast Iron frame sizes 143/5 to 254/6 have non-NEMA BA dimension. Refer to mechanical section of this catalog for details.

TEFC – C-Flange – Footless – NEMA Premium

HP	kW	RPM	NEMA Frame	Catalog Number	List Price	Mult. Symbol	Approx. Shipping Weight (lbs)	Service Factor	FL Amps @ High	FL. Eff (%)	"C" Dimension (in)	Voltage (V)	Notes
1	0.75	1800	143/5TC	00118ST3QIER143TC-W2	1,000	I1	43	1.25	1.41	85.5	14.055	460	15
1.5	1.1	1800	143/5TC	00158ST3QIER145TC-W2	1,061	I1	54	1.25	2.02	86.5	14.055	460	15
2	1.5	1800	143/5TC	00218ST3QIER145TC-W2	1,104	I1	59	1.25	2.61	86.5	14.055	460	15
3	2.2	1800	182/4TC	00318ST3QIER182TC-W2	1,326	I1	108	1.25	3.88	89.5	17.080	460	15
5	3.7	1800	182/4TC	00518ST3QIER184TC-W2	1,478	I1	116	1.25	6.45	89.5	17.080	460	15
7.5	5.5	1800	213/5TC	00718ST3QIER213TC-W2	1,776	I1	175	1.25	9.00	91.7	20.737	460	15
10	7.5	1800	213/5TC	01018ST3QIER215TC-W2	1,893	I1	192	1.25	12.4	91.7	20.737	460	15

Refer to electrical and mechanical data sections for additional technical information. Please refer to back cover for description of “NOTES”

For detailed specifications, data sheets, drawings and performance curves visit http://catalog.wegelectric.com

Three-Phase General Purpose Motors

BRAKE MOTORS – Three-Phase



TEFC - High Efficiency

WEG brake motors consist of an induction motor coupled to a disc brake. Brake is of sturdy construction with few moving parts which guarantees long durability and minimum maintenance.

Standard Features:

- Class F insulation (Impregnation Resin and Magnet Wire are class H)
- F1 Mounted
- Stainless Steel Nameplate - Laser etched with high contrast background
- Regreasable ball bearings (Frames 254T and up)

Features that make a difference:

- 1.25 service factor
- NPT Threaded terminal box
- Armature type brake
- Manual Release

Inverter Rated:
1000:1 for variable torque
12:1 for constant torque

If separate power supply to the Brake is required, (Such as on Motors operating from Variable frequency Controller); 230V to the Brake module is mandatory, unless motor model contains “Q” (ex. 00118EP3EBMQ143T). For “Q” models, the input voltage to the Brake module is 460V AC.

Brake Torques		
Frame	N.m	lb.ft
143/5T	16	12
182/4T	60	44
213/5T	125	92
254/6T	235	173
284/6T	400	295

ADDITIONAL TECHNICAL DATA

ELECTRICAL DATA: p. B-56

MECHANICAL DATA: p. C-36



TEFC – Foot Mount

HP	kW	RPM	NEMA Frame	Catalog Number	List Price	Mult. Symbol	Approx. Shipping Weight (lbs)	Service Factor	FL Amps @ High	FL. Eff (%)	"C" Dimension (in)	Voltage (V)	Notes
		1800	143T	00118EP3EBM143T	1,378	B1	56	1.25	1.48	82.5	15.222	208-230/460	25;30
		1800	143T	00118EP3EBMQ143T	1,538	B1	52	1.25	1.48	82.5	15.222	208-230/460	24;26;30
1	0.75	1800	143T	00118EP3HBM143T	1,378	B1	52	1.25	1.18	82.5	15.222	575	11;25;30
		1200	145T	00112EP3EBM145T	1,484	B1	62	1.25	1.70	80.0	16.166	208-230/460	25;30
		900	182T	00109EP3EBM182T	2,350	B1	105	1.25	2.31	74.0	18.246	208-230/460	25;30
		3600	143T	00156EP3EBM143T	1,389	B1	49	1.25	2.07	82.5	15.222	208-230/460	25;30
		1800	145T	00158EP3EBM145T	1,435	B1	63	1.25	2.05	84.0	16.166	208-230/460	25;30
1.5	1.1	1800	145T	00158EP3EBMQ145T	1,595	B1	58	1.25	2.05	84.0	16.166	208-230/460	24;26;30
		1200	182T	00152EP3EBM182T	2,138	B1	103	1.25	2.37	85.5	18.246	208-230/460	25;30
		900	184T	00159EP3EBM184T	2,479	B1	130	1.25	2.72	77.0	19.246	208-230/460	25;30
		3600	145T	00236EP3EBM145T	1,401	B1	52	1.25	2.60	84.0	16.166	208-230/460	25;30
		1800	145T	00218EP3EBM145T	1,447	B1	63	1.25	2.77	84.0	16.166	208-230/460	25;30
2	1.5	1800	145T	00218EP3EBMQ145T	1,607	B1	60	1.25	2.77	84.0	16.166	208-230/460	24;26;30
		1200	184T	00212EP3EBM184T	2,233	B1	125	1.25	3.20	86.5	19.246	208-230/460	25;30
		900	213T	00209EP3EBM213T	2,977	B1	181	1.25	3.46	82.5	22.646	208-230/460	25;30
		3600	182T	00336EP3EBM182T	2,116	B1	117	1.25	3.71	85.5	18.246	208-230/460	25;30
		1800	182T	00318EP3EBM182T	1,916	B1	107	1.25	3.90	87.5	18.246	208-230/460	25;30
3	2.2	1800	182T	00318EP3EBMQ182T	2,076	B1	108	1.25	3.90	87.5	18.246	208-230/460	24;26;30
		1200	213T	00312EP3EBM213T	2,982	B1	187	1.25	4.26	87.5	22.646	208-230/460	25;30
		900	215T	00309EP3EBM215T	3,234	B1	216	1.25	4.33	84.0	24.142	208-230/460	25;30
		3600	184T	00536EP3EBM184T	2,190	B1	122	1.25	5.90	87.5	19.246	208-230/460	25;30
		1800	184T	00518EP3EBM184T	2,143	B1	103	1.25	6.47	87.5	19.246	208-230/460	25;30
		1800	184T	00518EP3EBMQ184T	2,303	B1	113	1.25	6.47	87.5	19.246	208-230/460	24;26;30
5	3.7	1800	184T	00518EP3HBM184T	2,143	B1	102	1.25	5.24	87.5	19.246	575	25;30
		1200	215T	00512EP3EBM215T	3,218	B1	209	1.25	6.80	87.5	24.142	208-230/460	25;30
		900	254T	00509EP3EBM254T	5,043	B1	284	1.25	7.99	85.5	28.095	208-230/460	25;30
		3600	213T	00736EP3EBM213T	2,860	B1	167	1.25	8.67	88.5	22.646	208-230/460	25;30
		1800	213T	00718EP3EBM213T	2,640	B1	179	1.25	9.52	89.5	22.646	208-230/460	25;30
7.5	5.5	1200	254T	00712EP3EBM254T	4,756	B1	271	1.25	9.52	89.5	28.095	208-230/460	25;30
		900	256T	00709EP3EBM256T	5,613	B1	328	1.25	11.2	86.5	29.827	208-230/460	25;30
		3600	215T	01036EP3EBM215T	3,304	B1	198	1.25	11.7	89.5	24.142	208-230/460	25;30
		1800	215T	01018EP3EBM215T	3,184	B1	209	1.25	12.7	89.5	24.142	208-230/460	25;30
10	7.5	1800	215T	01018EP3HBM215T	3,184	B1	167	1.25	10.2	89.5	24.142	575	25;30
		1200	256T	01012EP3EBM256T	5,260	B1	292	1.25	13.3	89.5	29.827	208-230/460	25;30

Continued on next page

Refer to electrical and mechanical data sections for additional technical information. Please refer to back cover for description of "NOTES"

For detailed specifications, data sheets, drawings and performance curves visit http://catalog.wegelectric.com

TEFC – Foot Mount *continued*

HP	kW	RPM	NEMA Frame	Catalog Number	List Price	Mult. Symbol	Approx. Shipping Weight (lbs)	Service Factor	FL Amps @ High	FL. Eff (%)	"C" Dimension (in)	Voltage (V)	Notes
15	11	3600	254T	01536EP3EBM254T	4,560	B1	306	1.25	17.0	90.2	28.095	208-230/460	25;30
		1800	254T	01518EP3EBM254T	4,852	B1	300	1.25	17.8	91.0	28.095	208-230/460	25;30
		1800	254T	01518EP3EBMQ254T	5,012	B1	293	1.25	17.8	91.0	28.095	208-230/460	24;26;30
20	15	3600	256T	02036EP3EBM256T	5,371	B1	339	1.25	23.3	90.2	29.827	208-230/460	25;30
		1800	256T	02018EP3EBM256T	5,404	B1	328	1.25	24.3	91.0	29.827	208-230/460	25;30
25	18.5	1800	284T	02518EP3EBM284T	6,248	B1	482	1.25	29.6	92.4	32.648	208-230/460	25;30
30	22	1800	286T	03018EP3EBM286T	6,259	B1	512	1.25	34.3	92.4	34.144	208-230/460	25;30



TEFC – C-Face – Foot Mount

HP	kW	RPM	NEMA Frame	Catalog Number	List Price	Mult. Symbol	Approx. Shipping Weight (lbs)	Service Factor	FL Amps @ High	FL. Eff (%)	"C" Dimension (in)	Voltage (V)	Notes
1	0.75	1800	143TC	00118EP3EBMQ143TC	1,816	B1	52	1.25	1.48	82.5	15.222	208-230/460	24;26;30
1.5	1.1	1800	145TC	00158EP3EBMQ145TC	1,873	B1	58	1.25	2.05	84.0	16.166	208-230/460	24;26;30
2	1.5	1800	145TC	00218EP3EBMQ145TC	1,885	B1	60	1.25	2.77	84.0	16.166	208-230/460	24;26;30
3	2.2	1800	182TC	00318EP3EBMQ182TC	2,387	B1	108	1.25	3.90	87.5	18.246	208-230/460	24;26;30
5	3.7	1800	184TC	00518EP3EBMQ184TC	2,614	B1	113	1.25	6.47	87.5	19.246	208-230/460	24;26;30

Note: Flanged motors on Cast Iron frame sizes 143/5 to 254/6 have non-NEMA BA dimension. Refer to mechanical section of this catalog for details.

Motors | Automation | Energy | Transmission & Distribution | Coat



Global presence means:
We are there.
Global service means:
We are there for you.

WEG is known for its global sales and service capabilities which allow us to provide custom solutions all over the world. With a full range of IEC/NEMA Global Certifications and a full-line of low, medium, and high voltage motors, WEG can supply the right motor for your needs anywhere in the world. To learn more about our global certifications and solutions or to locate a U.S. Distributor near you, call 1-800-ASK-4WEG.

Transforming energy into solutions. www.weg.net

Three-Phase General Purpose Motors

IEC TRU-METRIC™ - Three Phase





TEFC

This line is designed and built according to European IEC34 and IEC79 standards.

Standard Features:

- 60 Hz (1.15 service factor) and 50 Hz (1.0 service factor)
- Class F insulation (Impregnation Resin and Magnet wire are class H)
- F2 mounted as standard (F1 convertible)
- Stainless Steel Nameplate - Laser etched with High contrast background
- Regreasable ball bearings (Frames 160 and up)
- Gasketed conduit box
- Class I, Div. 2, Groups A, B, C & D – T3, Class II, Div 2, Groups F & G – T3C (Cast Iron Frames only)
- Suitable for WYE/Delta Start (W and Y voltage code motors)

Features that make a difference:

- 1.25 service factor for 60 Hz operation (IE3)
- 1.15 service factor for 60 Hz operation (IE2)
- Optimized ventilation system for cooler operation and reduced noise levels
- Solid base for reduced vibration levels (Cast Iron Frames)
- Frames 225 and up can easily be F1 (B3L) converted by simply rotating the terminal box adapter or F3 by removing it
- Aluminum frames have removable feet for easy F1, F2 and F3 (B3L, B3R, B3T) conversion
- Terminal blocks

Inverter Rated:
1000:1 for variable torque
12:1 for constant torque

** IE2 is 10:1 VT and 4:1 CT*

ADDITIONAL TECHNICAL DATA

ELECTRICAL DATA: p. B-34 to B-48

MECHANICAL DATA: p. C-20 to C-26





Three-Phase General Purpose Motors

IEC TRU-METRIC™ - Three-Phase

TEFC – Foot Mount

HP	kW	RPM	NEMA Frame	Catalog Number	List Price	Mult. Symbol	Approx. Shipping Weight (lbs)	Service Factor	FL Amps @ High	FL. Eff (%)	"C" Dimension (in)	Voltage (V)	Notes
		3600	63	.1836EP3EAL63	280	T1	14	1.15	0.48	68.0	8.504	230/460//190/380	2;7
		1800	63	.1818EP3EAL63	267	T1	17	1.15	0.51	69.0	8.504	230/460//190/380	2;7
0.25	0.18	1200	71	.1812EP3EAL71	338	T1	22	1.15	0.77	61.0	9.764	230/460//190/380	2;7
		900/750	80	.1809EP3WAL80	540	T1	28	1.15	0.69	57.5	10.866	460//220-240/380-415	2;7;11
		900	80	.1809EP3EAL80	540	T1	30	1.15	0.80	50.5	10.866	230/460//190/380	2;7
		3600	63	.2536EP3EAL63	286	T1	15	1.15	0.62	70.0	8.504	230/460//190/380	2;7
		1800	71	.2518EP3EAL71	282	T1	24	1.15	0.68	73.0	9.764	230/460//190/380	2;7
0.33	0.25	1200	71	.2512EP3EAL71	363	T1	24	1.15	1.00	64.0	9.764	230/460//190/380	2;7
		900/750	80	.2509EP3WAL80	583	T1	32	1.15	0.91	59.5	10.866	460//220-240/380-415	2;7;11
		900	80	.2509EP3EAL80	583	T1	30	1.15	0.87	57.5	10.866	230/460//190/380	2;7
		3600	71	.3736EP3EAL71	309	T1	21	1.15	0.83	73.0	9.764	230/460//190/380	2;7
		1800	71	.3718EP3EAL71	290	T1	24	1.15	1.06	73.0	9.764	230/460//190/380	2;7
0.5	0.37	1200	80	.3712EP3EAL80	378	T1	28	1.15	1.07	64.0	10.866	230/460//190/380	2;7
		900/750	90S/L	.3709EP3WAL90S/L	662	T1	42	1.15	1.26	66.0	12.953	460//220-240/380-415	2;7;11
		900	90S	.3709EP3EAL90S	662	T1	39	1.15	1.35	61.5	12.953	230/460//190/380	2;7
		3600	71	.5536EP3EAL71	316	T1	23	1.15	1.14	76.0	9.764	230/460//190/380	2;7
		1800	80	.5518EP3EAL80	333	T1	28	1.15	1.25	77.0	10.866	230/460//190/380	2;7
0.75	0.55	1200	80	.5512EP3EAL80	405	T1	31	1.15	1.63	66.0	10.866	230/460//190/380	2;7
		900/750	90S/L	.5509EP3WAL90S/L	696	T1	58	1.15	1.66	68.0	12.953	460//220-240/380-415	2;7;11
		900	90L	.5509EP3EAL90L	696	T1	46	1.15	2.12	62.5	12.953	230/460//190/380	2;7
		3600/3000	80	.7536EP3WAL80	345	T1	27	1.15	1.42	79.0	10.866	460//220-240/380-415	2;7
		3600	80	.7536EP3EAL80	345	T1	28	1.15	1.42	79.0	10.866	230/460//190/380	2;7
		1800//1500	80	.7518EP3WAL80	339	T1	39	1.15	1.41	82.5	10.866	460//220-240/380-415	2;7
		1800	80	.7518EP3EAL80	339	T1	33	1.15	1.41	82.5	10.866	230/460//190/380	2;7
1	0.75	1000//1200	90S/L	.7512ET3EAL90S	537	T1	51	1.25	1.68	82.5	12.953	230/460//190/380	2;7
		1000//1200	90S/L	.7512ET3WAL90S	537	T1	49	1.25	1.68	82.5	12.953	460//220-240/380-415	2;7
		900/750	100L	.7509EP3WAL100L	756	T1	58	1.15	2.15	75.5	14.803	460//220-240/380-415	2;7;11
		900	100L	.7509EP3EAL100L	756	T1	57	1.15	2.31	74.0	14.803	230/460//190/380	2;7
		3600/3000	80	00136EP3WAL80	370	T1	30	1.15	2.07	82.5	10.866	460//220-240/380-415	2;7
		3600/3000	80	00136ET3EAL80	444	T1	30	1.25	2.03	84.0	10.866	230/460//190/380	2;7
		3600/3000	80	00136ET3WAL80	444	T1	30	1.25	2.03	84.0	10.866	460//220-240/380-415	2;7
		1800//1500	90S/L	00118ET3EAL90S	470	T1	43	1.25	2.05	86.5	12.953	230/460//190/380	2;7
1.5	1.1	1800//1500	90S/L	00118ET3WAL90S	470	T1	43	1.25	2.05	86.5	12.953	460//220-240/380-415	2;7
		1000//1200	100L	00112ET3EAL100L	746	T1	67	1.25	2.31	85.5	14.803	230/460//190/380	2;7
		1000//1200	100L	00112ET3WAL100L	746	T1	58	1.25	2.31	85.5	14.803	460//220-240/380-415	2;7
		900/750	100L	00109EP3WAL100L	767	T1	66	1.15	3.09	77.0	14.803	460//220-240/380-415	2;7;11

Continued on next page

Refer to electrical and mechanical data sections for additional technical information. Please refer to back cover for description of "NOTES"

For detailed specifications, data sheets, drawings and performance curves visit http://catalog.wegelectric.com

TEFC – Foot Mount *continued*

HP	kW	RPM	NEMA Frame	Catalog Number	List Price	Mult. Symbol	Approx. Shipping Weight (lbs)	Service Factor	FL Amps @ High	FL. Eff (%)	"C" Dimension (in)	Voltage (V)	Notes
2	1.5	3600/3000	90S/L	00156ET3EAL90S	504	T1	42	1.25	2.69	85.5	12.953	230/460//190/380	2;7
		3600/3000	90S/L	00156ET3WAL90S	504	T1	42	1.25	2.69	85.5	12.953	460//220-240/380-415	2;7
		1800//1500	90S/L	00158ET3EAL90L	524	T1	48	1.25	2.79	86.5	12.953	230/460//190/380	2;7
		1800//1500	90S/L	00158ET3WAL90L	524	T1	48	1.25	2.79	86.5	12.953	460//220-240/380-415	2;7
		1800	90S/L	00158ET3HAL90L	524	T1	47	1.25	2.23	86.5	12.953	575	2;7
		1000//1200	100L	00152ET3EAL100L	812	T1	75	1.25	3.15	86.5	14.803	230/460//190/380	2;7
		1000//1200	100L	00152ET3WAL100L	812	T1	67	1.25	3.15	86.5	14.803	460//220-240/380-415	2;7
		900/750	112M	00159EP3YAL112M	870	T1	88	1.15	3.68	82.5	15.472	460//380-415/660-690	2;7;11
3	2.2	3600/3000	90S/L	00236ET3EAL90L	756	T1	44	1.25	3.85	86.5	12.953	230/460//190/380	2;7
		3600/3000	90S/L	00236ET3WAL90L	756	T1	44	1.25	3.85	86.5	12.953	460//220-240/380-415	2;7
		1800//1500	100L	00218ET3EAL100L	630	T1	68	1.25	4.05	87.5	14.803	230/460//190/380	2;7
		1800//1500	100L	00218ET3WAL100L	630	T1	68	1.25	4.05	87.5	14.803	460//220-240/380-415	2;7
		1000//1200	132S	00212ET3EAL132S	1,166	T1	131	1.25	4.41	89.5	19.291	230/460//190/380	2;7
		1000//1200	132S	00212ET3YAL132S	1,166	T1	139	1.25	4.41	89.5	19.291	460//380-415/660-690	2;7
		900/750	132S	00209EP3YAL132S	1,228	T1	127	1.15	4.70	84.0	19.291	460//380-415/660-690	2;7;11
4	3	3600/3000	100L	00336ET3EAL100L	805	T1	57	1.25	5.01	88.5	14.803	230/460//190/380	2;7
		3600/3000	100L	00336ET3WAL100L	805	T1	57	1.25	5.01	88.5	14.803	460//220-240/380-415	2;7
		1800//1500	100L	00318ET3EAL100L	672	T1	78	1.25	5.39	88.5	14.803	230/460//190/380	2;7
		1800//1500	100L	00318ET3WAL100L	672	T1	77	1.25	5.39	88.5	14.803	460//220-240/380-415	2;7
		1800	100L	00318ET3HAL100L	672	T1	77	1.25	4.31	88.5	14.803	575	2;7
		1000//1200	132M	00312ET3EAL132M	1,247	T1	137	1.25	6.01	89.5	19.291	230/460//190/380	2;7
		1000//1200	132M	00312ET3YAL132M	1,247	T1	150	1.25	6.01	89.5	19.291	460//380-415/660-690	2;7
		900/750	132M	00309EP3YAL132M	1,400	T1	161	1.15	6.31	84.0	19.291	460//380-415/660-690	2;7;11
5.5	4	3600/3000	112M	00436ET3EAL112M	874	T1	88	1.25	6.67	88.5	15.472	230/460//190/380	2;7
		3600/3000	112M	00436ET3YAL112M	874	T1	86	1.25	6.67	88.5	15.472	460//380-415/660-690	2;7
		1800//1500	112M	00418ET3EAL112M	679	T1	94	1.25	7.10	89.5	15.472	230/460//190/380	2;7
		1800//1500	112M	00418ET3YAL112M	679	T1	94	1.25	7.10	89.5	15.472	460//380-415/660-690	2;7
		1000//1200	132M	00412ET3EAL132M	1,254	T1	133	1.25	7.90	89.5	19.291	230/460//190/380	2;7
		1000//1200	132M	00412ET3YAL132M	1,254	T1	145	1.25	7.90	89.5	19.291	460//380-415/660-690	2;7
		900/750	160M	00409EP3Y160M-W22	1,693	T1	256	1.15	8.29	86.5	23.543	460//380-415/660-690	7;11
7.5	5.5	3600/3000	132S	00536ET3EAL132S	1,144	T1	135	1.25	8.97	89.5	19.291	230/460//190/380	2;7
		3600/3000	132S	00536ET3YAL132S	1,144	T1	132	1.25	8.97	89.5	19.291	460//380-415/660-690	2;7
		1800//1500	132S	00518ET3EAL132S	932	T1	145	1.25	9.07	91.7	19.291	230/460//190/380	2;7
		1800//1500	132S	00518ET3YAL132S	932	T1	140	1.25	9.07	91.7	19.291	460//380-415/660-690	2;7
		1800	132S	00518ET3HAL132S	932	T1	140	1.25	7.26	91.7	19.291	575	2;7
		1000//1200	160M	00512ET3E160M-W22	1,760	T1	276	1.25	9.48	91.0	23.543	230/460//190/380	7
		1000//1200	160M	00512ET3Y160M-W22	1,760	T1	289	1.25	9.48	91.0	23.543	460//380-415/660-690	7
		900/750	160M	00509EP3Y160M-W22	1,951	T1	287	1.15	12.5	84.9	23.543	460//380-415/660-690	7;11

Continued on next page

Refer to electrical and mechanical data sections for additional technical information. Please refer to back cover for description of "NOTES"

For detailed specifications, data sheets, drawings and performance curves visit http://catalog.wegelectric.com

Data subject to change without notice.

TEFC – Foot Mount *continued*

HP	kW	RPM	NEMA Frame	Catalog Number	List Price	Mult. Symbol	Approx. Shipping Weight (lbs)	Service Factor	FL Amps @ High	FL. Eff (%)	"C" Dimension (in)	Voltage (V)	Notes
10	7.5	3600/3000	132S	00736ET3EAL132S	1,292	T1	146	1.25	12.3	90.2	19.291	230/460//190/380	2;7
		3600/3000	132S	00736ET3YAL132S	1,292	T1	145	1.25	12.3	90.2	19.291	460//380-415/660-690	2;7
		1800//1500	132M	00718ET3EAL132M	1,110	T1	162	1.25	12.2	91.7	19.291	230/460//190/380	2;7
		1800//1500	132M	00718ET3YAL132M	1,110	T1	157	1.25	12.2	91.7	19.291	460//380-415/660-690	2;7
		1800	132M	00718ET3HAL132M	1,110	T1	162	1.25	9.76	91.7	19.291	575	2;7
		1000//1200	160M	00712ET3E160M-W22	2,306	T1	291	1.25	13.1	91.0	23.543	230/460//190/380	7
		1000//1200	160M	00712ET3Y160M-W22	2,306	T1	297	1.25	13.1	91.0	23.543	460//380-415/660-690	7
		900/750	160L	00709EP3Y160L-W22	2,412	T1	328	1.15	15.0	88.5	25.276	460//380-415/660-690	7;11
15	11	3600/3000	160M	01136ET3Y160M-W22	2,102	T1	300	1.25	17.9	91.7	23.543	460//380-415/660-690	7
		1800//1500	160M	01118ET3Y160M-W22	1,726	T1	332	1.25	18.2	92.4	23.543	460//380-415/660-690	7
		1000//1200	160L	01112ET3Y160L-W22	3,160	T1	346	1.25	18.8	91.7	25.276	460//380-415/660-690	7
		900/750	180L	01109EP3Y180L-W22	3,505	T1	413	1.15	18.8	89.5	27.638	460//380-415/660-690	7;11
		900/750	200L	01509EP3Y200L-W22	4,485	T1	528	1.15	28.0	91.0	30.197	460//380-415/660-690	7;11
20	15	3600/3000	160M	01536ET3Y160M-W22	2,413	T1	316	1.25	24.4	91.7	23.543	460//380-415/660-690	7
		1800//1500	160L	01518ET3Y160L-W22	2,118	T1	379	1.25	25.0	93.0	25.276	460//380-415/660-690	7
		1000//1200	180L	01512ET3Y180L-W22	3,884	T1	459	1.25	24.7	91.7	27.638	460//380-415/660-690	7
25	18.5	3600/3000	160L	01836ET3Y160L-W22	2,925	T1	349	1.25	29.9	92.4	25.276	460//380-415/660-690	7
		1800//1500	180M	01818ET3Y180M-W22	2,689	T1	444	1.25	30.6	93.6	26.142	460//380-415/660-690	7
		1000//1200	200L	01812ET3Y200L-W22	4,886	T1	556	1.25	30.8	93.0	30.197	460//380-415/660-690	7
		900/750	225S/M	01809EP3Y225S/M-W22	5,270	T1	861	1.15	31.0	92.4	34.882	460//380-415/660-690	7;11
30	22	3600/3000	180M	02236ET3Y180M-W22	3,492	T1	435	1.25	34.7	92.4	26.142	460//380-415/660-690	7
		1800//1500	180L	02218ET3Y180L-W22	3,225	T1	484	1.25	36.0	93.6	27.638	460//380-415/660-690	7
		1000//1200	200L	02212ET3Y200L-W22	4,924	T1	602	1.25	37.1	93.0	30.197	460//380-415/660-690	7
		900/750	225S/M	02209EP3Y225S/M-W22	6,702	T1	903	1.15	36.9	92.4	34.882	460//380-415/660-690	7;11
40	30	3600/3000	200L	03036ET3Y200L-W22	4,877	T1	565	1.25	47.1	93.0	30.197	460//380-415/660-690	7
		1800//1500	200L	03018ET3Y200L-W22	4,312	T1	603	1.25	49.4	94.1	30.197	460//380-415/660-690	7
		1000//1200	225S/M	03012ET3Y225S/M-W22	7,689	T1	1035	1.25	47.6	94.1	34.882	460//380-415/660-690	7
		900/750	250S/M	03009EP3Y250S/M-W22	7,909	T1	1075	1.15	49.1	92.4	37.992	460//380-415/660-690	7;11

Continued on next page

Refer to electrical and mechanical data sections for additional technical information. Please refer to back cover for description of "NOTES"

For detailed specifications, data sheets, drawings and performance curves visit http://catalog.wegelectric.com

TEFC – Foot Mount *continued*

HP	kW	RPM	NEMA Frame	Catalog Number	List Price	Mult. Symbol	Approx. Shipping Weight (lbs)	Service Factor	FL Amps @ High	FL. Eff (%)	"C" Dimension (in)	Voltage (V)	Notes
50	37	3600/3000	200L	03736ET3Y200L-W22	5,487	T1	577	1.25	57.7	93.6	30.197	460//380-415/660-690	7
		1800//1500	225S/M	03718ET3Y225S/M-W22	6,984	T1	1027	1.25	58.5	94.5	34.882	460//380-415/660-690	7
		1000//1200	250S/M	03712ET3Y250S/M-W22	9,947	T1	1242	1.25	58.8	94.1	37.992	460//380-415/660-690	7
		900/750	280S/M	03709EP3Y280S/M-W22	10,492	T1	1529	1.15	62.8	93.6	42.165	460//380-415/660-690	7;11
60	45	3600/3000	225S/M	04536ET3Y225S/M-W22	7,961	T1	1038	1.25	66.7	94.1	33.701	460//380-415/660-690	7
		1800//1500	225S/M	04518ET3Y225S/M-W22	7,391	T1	1058	1.25	69.9	95.0	34.882	460//380-415/660-690	7
		1000//1200	280S/M	04512ET3Y280S/M-W22	11,023	T1	1653	1.25	74.7	94.5	42.165	460//380-415/660-690	7
		900	280S/M	04509EP3Y280S/M-W22	11,442	T1	1619	1.15	77.0	94.1	42.165	460//380-415/660-690	7;11
75	55	3600/3000	250S/M	05536ET3Y250S/M-W22	9,847	T1	1246	1.25	80.3	94.5	37.992	460//380-415/660-690	7
		1800//1500	250S/M	05518ET3Y250S/M-W22	8,961	T1	1241	1.25	85.1	95.4	37.992	460//380-415/660-690	7
		1000//1200	280S/M	05512ET3Y280S/M-W22	13,622	T1	1752	1.25	90.2	94.5	42.165	460//380-415/660-690	7
		900/750	315S/M	05509EP3Y315S/M-W22	13,731	T1	2030	1.15	91.7	94.1	50.157	460//380-415/660-690	7;11
100	75	3600/3000	280S/M	07536ET3Y280S/M-W22	12,472	T1	1902	1.25	111	94.5	42.165	460//380-415/660-690	7
		1800//1500	280S/M	07518ET3Y280S/M-W22	12,353	T1	1896	1.25	116	95.4	42.165	460//380-415/660-690	7
		1000//1200	315S/M	07512ET3Y315S/M-W22	16,479	T1	2489	1.25	122	95.0	50.157	460//380-415/660-690	7
		900/750	315S/M	07509EP3Y315S/M-W22	16,649	T1	2251	1.15	123	94.5	50.157	460//380-415/660-690	7;11
125	90	3600/3000	280S/M	09036ET3Y280S/M-W22	16,720	T1	1989	1.25	132	95.0	42.165	460//380-415/660-690	7
		1800//1500	280S/M	09018ET3Y280S/M-W22	15,220	T1	2008	1.25	139	95.4	42.165	460//380-415/660-690	7
		1000//1200	315S/M	09012ET3Y315S/M-W22	19,448	T1	2689	1.25	146	95.4	50.157	460//380-415/660-690	7
		900/750	315S/M	09009EP3Y315S/M-W22	19,007	T1	2403	1.15	148	94.5	50.157	460//380-415/660-690	7;11
150	110	3600/3000	315S/M	11036ET3Y315S/M-W22	21,018	T1	2463	1.25	163	95.0	48.976	460//380-415/660-690	7
		1800//1500	280S/M	11018ET3Y280S/M-W22	17,078	T1	2260	1.25	170	95.8	42.165	460//380-415/660-690	7
		1000//1200	315S/M	11012ET3Y315S/M-W22	21,300	T1	2818	1.25	178	95.8	50.157	460//380-415/660-690	7
		900/750	315L	11009EP3Y315L-W22	24,920	T1	2925	1.15	182	95.0	54.449	460//380-415/660-690	7;11
175	132	3600/3000	315S/M	13236ET3Y315S/M-W22	23,180	T1	2667	1.25	193	95.4	48.976	460//380-415/660-690	7
		1800//1500	315S/M	13218ET3Y315S/M-W22	19,732	T1	2803	1.25	203	96.2	50.157	460//380-415/660-690	7
		1000//1200	315S/M	13212ET3Y315S/M-W22	19,079	T1	3019	1.25	214	95.8	50.157	460//380-415/660-690	7
		900/750	315L	13209EP3Y315L-W22	30,078	T1	3163	1.15	217	95.4	54.449	460//380-415/660-690	7;11
200	150	3600/3000	315S/M	15036ET3Y315S/M-W22	26,249	T1	2758	1.25	219	95.4	48.976	460//380-415/660-690	7
		1800//1500	315S/M	15018ET3Y315S/M-W22	21,772	T1	2864	1.25	228	96.2	50.157	460//380-415/660-690	7
		1000//1200	315L	15012ET3Y315L-W22	22,444	T1	3315	1.25	240	95.8	54.449	460//380-415/660-690	7
250	185	3600/3000	315S/M	18536EP3Y315S/M-W22	23,687	T1	2624	1.15	270	95.4	53.268	460//380-415/660-690	7;11
		1800//1500	315S/M	18518EP3Y315S/M-W22	23,435	T1	2738	1.15	283	95.4	54.449	460//380-415/660-690	7;11
		1000//1200	315L	18512EP3Y315L-W22	38,854	T1	3176	1.15	293	95.4	54.449	460//380-415/660-690	7;11

Continued on next page

Refer to electrical and mechanical data sections for additional technical information. Please refer to back cover for description of "NOTES"

For detailed specifications, data sheets, drawings and performance curves visit http://catalog.wegelectric.com

Data subject to change without notice.

TEFC – Foot Mount *continued*

HP	kW	RPM	NEMA Frame	Catalog Number	List Price	Mult. Symbol	Approx. Shipping Weight (lbs)	Service Factor	FL Amps @ High	FL. Eff (%)	"C" Dimension (in)	Voltage (V)	Notes
300	220	3600/3000	315L	22036EP3Y315L-W22	39,475	T1	2890	1.15	322	95.4	53.268	460//380-415/660-690	7;11
		1800//1500	315L	22018EP3Y315L-W22	32,352	T1	3121	1.15	333	95.4	54.449	460//380-415/660-690	7;11
		1000//1200	315L	22012EP3Y315L-W22	41,020	T1	3756	1.15	349	95.4	54.449	460//380-415/660-690	7;11
350	260	1800//1500	355M/L	26018EP3Y355M/L-W22	39,072	T1	3525	1.15	401	95.8	58.346	460//380-415/660-690	7;11
		1000//1200	355M/L	26012EP3Y355M/L-W22	47,322	T1	4229	1.15	422	95.4	58.346	460//380-415/660-690	7;11
400	300	3600/3000	315L	30036EP3Y315L-W22	42,828	T1	3362	1.15	434	95.4	54.449	460//380-415/660-690	7;11
		1800//1500	355M/L	30018EP3Y355M/L-W22	53,832	T1	3614	1.15	462	95.8	58.346	460//380-415/660-690	7;11
450	330	1800//1500	355M/L	33018EP3Y355M/L-W22	57,640	T1	4185	1.15	503	95.8	58.460	460//380-415/660-690	7;11

Refer to electrical and mechanical data sections for additional technical information. Please refer to back cover for description of “NOTES”

For detailed specifications, data sheets, drawings and performance curves visit http://catalog.wegelectric.com

Super Premium Efficiency Motors

GENERAL PURPOSE

Three-Phase

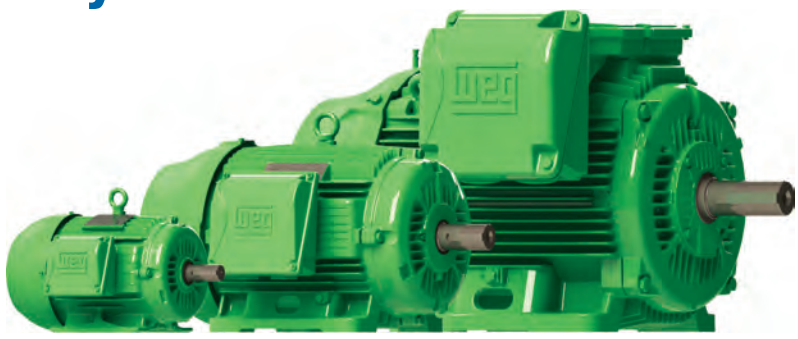

TEFC

High performance with maximum energy efficiency, this is the meaning of the new WEG electric motor. High efficiency and Low cost of Ownership throughout the entire motor lifetime have been the basis for the W22 development. A design created to anticipate concepts on performance and energy savings.

WEG's W22 cast iron platform has an improved cooling system and solid feet for cooler operation and reduced vibration and noise extending the life of the motor.

Standard Features:

- 50/60 Hz rated (380V on Nameplate - 400/415 Available - Same Horsepower at 50 Hz with a 1.0 service factor)
- Class F insulation (Impregnation Resin and Magnet wire are class H)
- NEMA design A. All rating Exceed NEMA design C (1)
- F1 Mounted (Cast Iron frames 254T and larger are F2 convertible)
- Frames 447T and up can easily be F2 converted by simply rotating the terminal box adapter.
- Stainless Steel Nameplate - Laser etched with high contrast background
- Regreasable ball bearings (Frames 254T and up)
- Gasketed conduit box
- Class I, Div. 2, Groups A, B, C & D – T3, Class II, Div 2, Groups F & G – T3C

Features that make a difference:

- Super Premium efficiency exceeding NEMA Premium levels
- 1.25 service factor in all ratings
- Optimized ventilation system for cooler operation and reduced noise levels.
- Solid base for reduced vibration levels
- Frames 447T and up can easily be F2 converted by simply rotating the terminal box adapter
- NPT Threaded terminal box

Inverter Rated:
1000 : 1 for variable torque
20 : 1 for constant torque

ADDITIONAL TECHNICAL DATA

ELECTRICAL DATA: p. B-49

MECHANICAL DATA: p. C-2



TEFC – Foot Mount – Super Premium

HP	kW	RPM	NEMA Frame	Catalog Number	List Price	Mult. Symbol	Approx. Shipping Weight (lbs)	Service Factor	FL Amps @ High	FL. Eff (%)	"C" Dimension (in)	Voltage (V)	Notes
1	0.75	3600	143T	00136EG3E143T-W22	669	N1	42	1.25	1.35	84.0	12.346	208-230/460	36
		1800	L143T	00118EG3EL143T-W22	580	N1	56	1.25	1.33	87.5	13.566	208-230/460	36
1.5	1.1	3600	143T	00156EG3E143T-W22	597	N1	44	1.25	1.92	86.5	12.346	208-230/460	36
		1800	L145T	00158EG3EL145T-W22	606	N1	59	1.25	1.93	88.5	14.566	208-230/460	36
2	1.5	3600	145T	00236EG3E145T-W22	650	N1	51	1.25	2.56	87.5	13.346	208-230/460	36
		1800	L145T	00218EG3EL145T-W22	673	N1	47	1.25	2.64	88.5	14.566	208-230/460	36
3	2.2	3600	182T	00336EG3E182T-W22	839	N1	97	1.25	3.67	88.5	14.860	208-230/460	36
		1800	L182T	00318EG3EL182T-W22	729	N1	106	1.25	3.76	91.0	16.041	208-230/460	36
		1200	L213T	00312EG3EL213T-W22	1,242	N1	175	1.25	4.30	90.2	19.527	208-230/460	11;36
5	3.7	3600	184T	00536EG3E184T-W22	960	N1	106	1.25	5.99	90.2	15.860	208-230/460	36
		1800	L184T	00518EG3EL184T-W22	849	N1	117	1.25	6.40	91.0	17.041	208-230/460	36
		1200	L215T	00512EG3EL215T-W22	1,465	N1	203	1.25	6.83	91.0	20.905	208-230/460	11;36
7.5	5.5	3600	213T	00736EG3E213T-W22	1,238	N1	161	1.25	8.82	91.0	18.021	208-230/460	36
		1800	L213T	00718EG3EL213T-W22	1,198	N1	182	1.25	8.94	93.0	19.527	208-230/460	36
		1200	254T	00712EG3E254T-W22	2,272	N1	324	1.25	9.46	92.4	23.213	208-230/460	11;36
10	7.5	3600	215T	01036EG3E215T-W22	1,465	N1	190	1.25	11.5	91.7	19.517	208-230/460	36
		1800	L215T	01018EG3EL215T-W22	1,400	N1	209	1.25	12.0	93.0	20.905	208-230/460	36
		1200	256T	01012EG3E256T-W22	2,636	N1	364	1.25	12.7	92.4	24.945	208-230/460	11;36
15	11	3600	254T	01536EG3E254T-W22	2,006	N1	319	1.25	17.4	92.4	23.213	208-230/460	36
		1800	254T	01518EG3E254T-W22	2,033	N1	344	1.25	17.8	93.6	23.213	208-230/460	36
		1200	284T	01512EG3E284T-W22	3,620	N1	437	1.25	18.1	93.0	26.433	208-230/460	11;36
20	15	3600	256T	02036EG3E256T-W22	2,620	N1	365	1.25	23.0	93.0	24.945	208-230/460	36
		1800	256T	02018EG3E256T-W22	2,421	N1	386	1.25	24.7	94.1	24.945	208-230/460	36
		1200	286T	02012EG3E286T-W22	4,358	N1	501	1.25	24.4	93.0	27.929	208-230/460	11;36
25	18.5	3600	284TS	02536EG3E284TS-W22	3,298	N1	428	1.25	28.5	93.6	25.061	208-230/460	36
		1800	284T	02518EG3E284T-W22	3,017	N1	452	1.25	30.3	94.5	26.433	208-230/460	36
		1200	324T	02512EG3E324T-W22	5,211	N1	608	1.25	30.8	94.1	29.620	208-230/460	11;36
30	22	3600	286TS	03036EG3E286TS-W22	3,917	N1	480	1.25	33.5	93.6	26.557	208-230/460	36
		1800	286T	03018EG3E286T-W22	3,545	N1	496	1.25	35.6	94.5	27.929	208-230/460	36
		1200	326T	03012EG3E326T-W22	5,800	N1	667	1.25	36.7	94.1	31.116	208-230/460	11;36
40	30	3600	324TS	04036EG3E324TS-W22	5,198	N1	566	1.25	46.5	94.1	28.120	208-230/460	36
		1800	324T	04018EG3E324T-W22	4,596	N1	622	1.25	48.9	95.0	29.620	208-230/460	36
		1200	364/5T	04012EG3E364T-W22	8,012	N1	1029	1.25	48.9	95.0	34.251	208-230/460	11;36
50	37	3600	326TS	05036EG3E326TS-W22	5,848	N1	625	1.25	57.1	94.5	29.616	208-230/460	36
		1800	326T	05018EG3E326T-W22	5,610	N1	652	1.25	60.1	95.4	31.116	208-230/460	36
		1200	364/5T	05012EG3E365T-W22	9,370	N1	1045	1.25	60.3	95.0	34.251	208-230/460	11;36

Continued on next page

Refer to electrical and mechanical data sections for additional technical information. Please refer to back cover for description of “NOTES”

For detailed specifications, data sheets, drawings and performance curves visit http://catalog.wegelectric.com

GENERAL PURPOSE - Three-Phase

TEFC – Foot Mount – Super Premium *continued*

HP	kW	RPM	NEMA Frame	Catalog Number	List Price	Mult. Symbol	Approx. Shipping Weight (lbs)	Service Factor	FL Amps @ High	FL. Eff (%)	"C" Dimension (in)	Voltage (V)	Notes
60	45	3600	364/5TS	06036EG3E364TS-W22	8,307	N1	1028	1.25	66.8	95.0	32.276	208-230/460	36
		1800	364/5T	06018EG3E364T-W22	8,128	N1	1034	1.25	70.2	95.8	34.251	208-230/460	36
		1200	404/5T	06012EG3E404T-W22	11,547	N1	1323	1.25	72.2	95.4	39.730	208-230/460	11;36
75	55	3600	364/5TS	07536EG3E365TS-W22	10,000	N1	1028	1.25	82.6	95.0	32.276	208-230/460	36
		1800	364/5T	07518EG3E365T-W22	9,576	N1	1033	1.25	86.8	95.8	34.251	208-230/460	36
		1200	404/5T	07512EG3E405T-W22	13,264	N1	1348	1.25	89.3	95.4	39.730	208-230/460	11;36
100	75	3600	404/5TS	10036EG3E405TS-W22	13,202	N1	1342	1.25	110	95.4	36.732	208-230/460	36
		1800	404/5T	10018EG3E405T-W22	12,858	N1	1337	1.25	116	96.2	39.730	208-230/460	36
		1200	444/5T	10012EG3E444T-W22	17,194	N1	2046	1.25	124	95.8	44.950	208-230/460	11;36
125	90	3600	444/5TS	12536EG3G444TS-W22	16,885	N1	1915	1.25	136	95.8	41.200	460	36
		1800	444/5T	12518EG3G444T-W22	16,223	N1	1985	1.25	144	96.2	44.950	460	36
		1200	444/5T	12512EG3G445T-W22	19,742	N1	2095	1.25	152	95.8	44.950	460	11;36
150	110	3600	444/5TS	15036EG3G445TS-W22	20,770	N1	2107	1.25	163	96.2	41.200	460	36
		1800	444/5T	15018EG3G445T-W22	19,162	N1	2291	1.25	170	96.5	44.950	460	36
		1200	447/9T	15012EG3G449T-W22	22,703	N1	2589	1.25	179	96.2	56.338	460	11;36
200	150	3600	445/7TS	20036EG3G447TS-W22	25,918	N1	2342	1.25	217	96.2	44.951	460	36
		1800	447/9T	20018EG3G449T-W22	23,208	N1	3310	1.25	234	96.8	56.338	460	36
		1200	447/9T	20012EG3G449T-W22	27,646	N1	3086	1.25	245	96.2	56.338	460	11;36
250	185	3600	445/7TS	25036EG3G447TS-W22	32,831	N1	2780	1.25	267	96.5	44.951	460	36
		1800	447/9T	25018EG3G449T-W22	29,388	N1	3482	1.25	286	96.8	56.338	460	36

Refer to electrical and mechanical data sections for additional technical information. Please refer to back cover for description of "NOTES"

For detailed specifications, data sheets, drawings and performance curves visit http://catalog.wegelectric.com

Data subject to change without notice.

Super Premium Efficiency

The most efficient induction motor in the World!

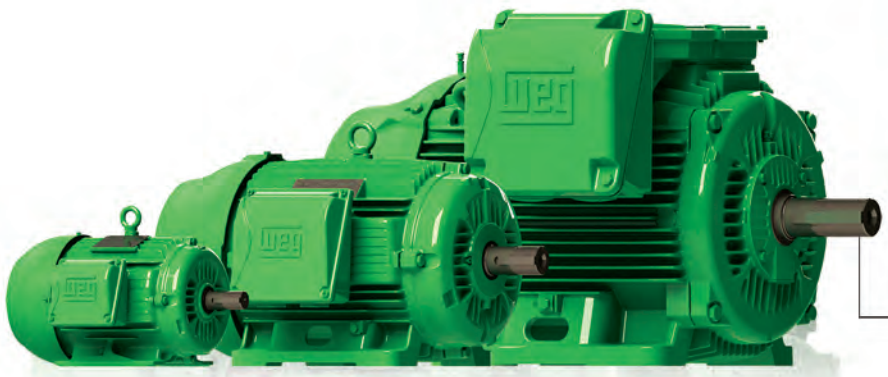

Motors with higher efficiency and lower total cost of ownership...
We call it WEGnology.



Transforming energy into solutions. **www.weg.net**

Severe-Duty – Three Phase Motors



You Do Not Need A Special Motor For Severe Duty.

Severe Duty Is Standard With WEG.

W22 - Cast Iron

Standard Features:

- 50/60 Hz rated (380V on nameplate - 400/415 available)
- Rated 50HZ at same horsepower up to 250HP 1.0 Service Factor for 2,4 & 6 pole motors
- Rated 50Hz at same horsepower up to 125HP 1.0 Service Factor for 8 pole motors
- Class F insulation (impregnation resin and magnet wire are class H)
- F1 mounted (cast iron frames are F2 convertible). Frames 447T and up can easily be F2 converted by simply rotating the terminal box adapter
- Cast iron frames: regreasable ball bearings (frames 254T and up)
- Gasketed conduit box

Inverter Rated

1000:1 for Variable Torque

NEMA Premium

20:1 Constant Torque up to 250HP

6:1 Constant Torque 300HP and up

High Efficiency (EPAct)

12:1 Constant Torque up to 250HP

4:1 Constant Torque 300HP and up

Features that make a difference:

- All NEMA Premium ratings have a 1.25 service factor (up to 100 HP) resulting in cooler operation and extended life of the motor
- All Cast Iron Construction, including Terminal Box and Fan Cover (*)
- Solid feet for reduced vibration levels and impact absorption
- Optimized ventilation system for cooler operation and extended life
- High Grade FC200 cast iron provides superior mechanical strength and heat dissipation
- All WEG W22 motors are Totally Enclosed Fan Cooled with a true IP55 rating against dust and moisture. (IPW56, IPW65 and IPW66 available as optional)
- Exclusive W-Seal 364T and larger provides superior bearing protection
- Taconite Labyrinth seal 586 Frame and larger
- Exclusive WEG painting system exceed 200hrs ASTM 117 corrosion test (Exceeds IEEE841 standard)
- Balanced to 0.08 inches per second vibration limits (Meets IEEE841 standard)
- Four Bolt Conduit Cover with glued Neoprene Gasket
- Impregnation Resin and magnet wire are insulation class H
- Stainless Steel Nameplate - Laser etched with high contrast background
- Corrosion Proof Drains
- Inverter Duty per NEMA MG1, Part 31
- Certified Class I Div 2, Groups A, B, C & D; Class II, Div 2, Groups F & G
- Suitable for IEEE45 USCG 259 – Marine Duty

*Cast iron fan cover available as an option on 143-215T frames

ADDITIONAL TECHNICAL DATA

ELECTRICAL DATA: p. B-6

MECHANICAL DATA: p. C-2

New Cooling System

Fan Cover
- Aerodynamic design
- Noise level reduction
- Better air flow distribution over frame
- Increased mechanical strength

Fan
- Reinforced fan hub structure
- Noise level reduction
- Increased air flow
- Fan with higher stiffness

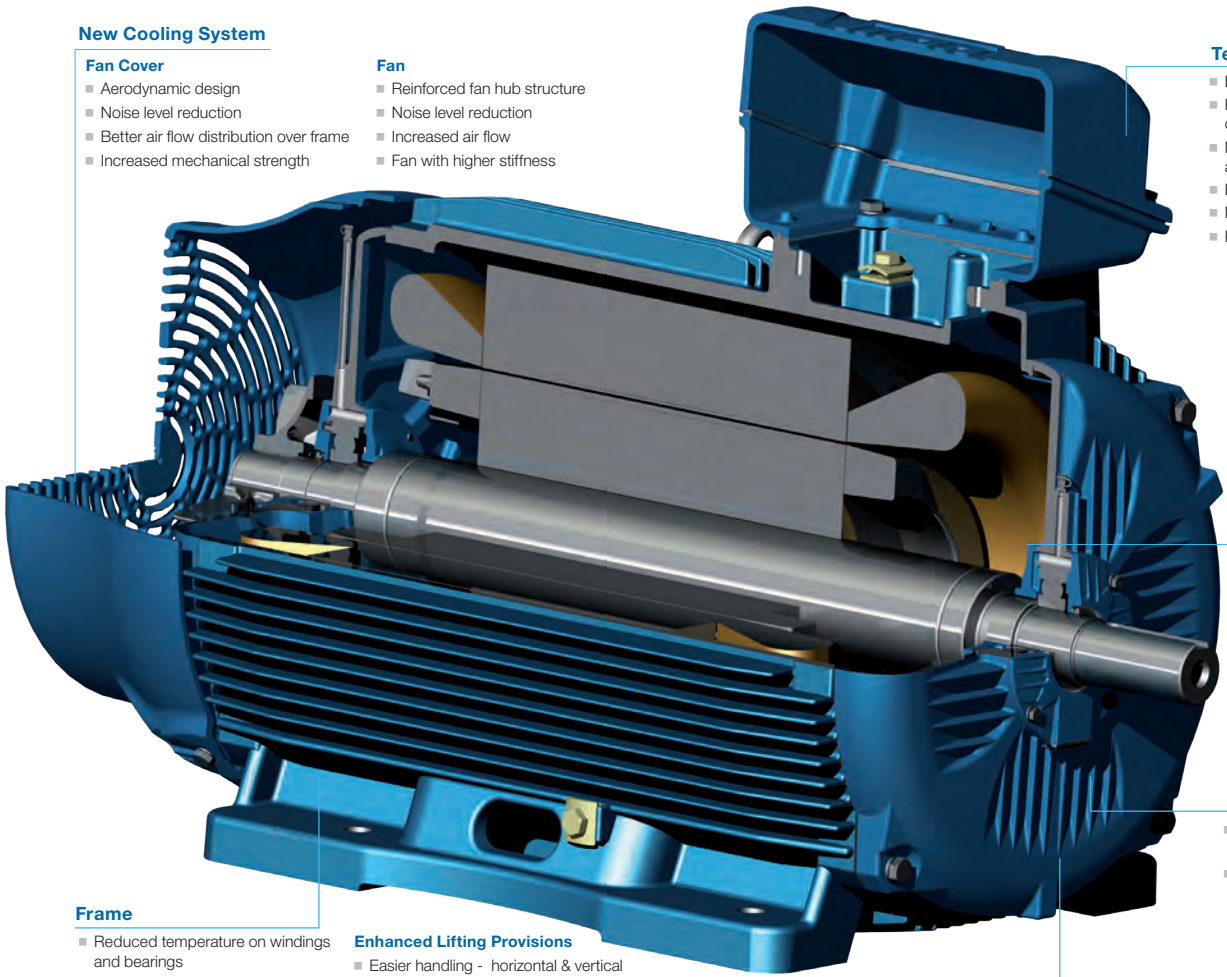

Terminal Box
- Better connection quality
- Easier cable handling during installation
- More space available for accessory installation
- Easier Maintenance
- Mounting F1/F2/F3
- Rotation on 90° stages

Bearing Caps

External
- Finned surface for improved bearing heat dissipation

Internal
- Change of grease path for positive lubrication
- Bearing lubrication quality improvement
- Reduced bearing temperature

Seal Subsystem
- Increased dust and moisture protection
- Increased protection to high-pressure cleaning

Frame
- Reduced temperature on windings and bearings
- Noise level reduction
- Terminal box position outlet on top

Pad for vibration sensor
- Displaced 90° from each other

Enhanced Lifting Provisions
- Easier handling - horizontal & vertical
- Higher mechanical strength and handling safety

Solid feet
- More impact resistance
- Ideal for high vibration level applications

Endshields Subsystem

DE (Drive Endshield)
- New fin design
- Bearing moved outwards for better load support
- Improved bearing heat dissipation for reduced bearing temperature
- Reinforced endshield structure

NDE (Non-Drive Endshield)
- New design with smooth exterior surface
- Improved air flow
- Noise level reduction
- Improved structural rigidity for low vibration

Severe Duty - Three-Phase Motors

GENERAL PURPOSE



TEFC – Foot Mount

HP	kW	RPM	NEMA Frame	Catalog Number	List Price	Mult. Symbol	Approx. Shipping Weight (lbs)	Service Factor	FL Amps @ High	FL. Eff (%)	"C" Dimension (in)	Voltage (V)	Notes
1	0.75	3600	143/5T	00136ET3E143T-W22	538	N1	43	1.25	1.43	78.5	13.346	208-230/460	
		3600	143/5T	00136ET3H143T-W22	538	N1	41	1.25	1.14	78.5	13.346	575	
		1800	143/5T	00118ET3E143T-W22	527	N1	46	1.25	1.41	85.5	13.346	208-230/460	
		1800	143/5T	00118ET3H143T-W22	527	N1	46	1.25	1.13	85.5	13.346	575	
		1200	143/5T	00112ET3E145T-W22	608	N1	54	1.25	1.73	82.5	13.346	208-230/460	
		1200	143/5T	00112ET3H145T-W22	608	N1	54	1.25	1.38	82.5	13.346	575	
		900	182/4T	00109ET3E182T-W22	1,043	N1	87	1.25	2.30	78.5	15.860	208-230/460	
		900	182/4T	00109ET3H182T-W22	1,043	N1	104	1.25	1.84	78.5	15.860	575	
1.5	1.1	3600	143/5T	00156ET3E143T-W22	543	N1	47	1.25	1.91	84.0	13.346	208-230/460	
		3600	143/5T	00156ET3H143T-W22	543	N1	47	1.25	1.53	84.0	13.346	575	
		1800	143/5T	00158ET3E145T-W22	551	N1	54	1.25	2.02	86.5	13.346	208-230/460	
		1800	143/5T	00158ET3H145T-W22	551	N1	53	1.25	1.62	86.5	13.346	575	
		1200	182/4T	00152ET3E182T-W22	754	N1	98	1.25	2.39	87.5	15.860	208-230/460	
		1200	182/4T	00152ET3H182T-W22	754	N1	94	1.25	1.91	87.5	15.860	575	
		900	182/4T	00159EP3E184T-W22	983	W1	86	1.25	2.72	77.0	15.860	208-230/460	30
		900	182/4T	00159ET3E184T-W22	1,207	N1	102	1.25	2.70	82.5	15.860	208-230/460	
2	1.5	3600	143/5T	00236ET3E145T-W22	591	N1	53	1.25	2.53	85.5	13.346	208-230/460	
		3600	143/5T	00236ET3H145T-W22	591	N1	54	1.25	2.02	85.5	13.346	575	
		1800	143/5T	00218ET3E145T-W22	612	N1	56	1.25	2.61	86.5	13.346	208-230/460	
		1800	143/5T	00218ET3H145T-W22	612	N1	55	1.25	2.09	86.5	13.346	575	
		1200	182/4T	00212ET3E184T-W22	819	N1	107	1.25	3.23	88.5	15.860	208-230/460	
		1200	182/4T	00212ET3H184T-W22	819	N1	107	1.25	2.58	88.5	15.860	575	
		900	213/5T	00209EP3E213T-W22	1,480	W1	132	1.25	3.46	82.5	19.517	208-230/460	30
		900	213/5T	00209EP3H213T-W22	1,480	W1	137	1.25	2.77	82.5	19.517	575	30
		900	213/5T	00209ET3E213T-W22	1,848	N1	161	1.25	3.39	85.5	19.517	208-230/460	
3	2.2	3600	182/4T	00336ET3E182T-W22	763	N1	101	1.25	3.63	86.5	15.860	208-230/460	
		3600	182/4T	00336ET3H182T-W22	763	N1	99	1.25	2.90	86.5	15.860	575	
		1800	182/4T	00318ET3E182T-W22	663	N1	96	1.25	3.88	89.5	15.860	208-230/460	
		1800	182/4T	00318ET3H182T-W22	663	N1	96	1.25	3.10	89.5	15.860	575	
		1200	213/5T	00312ET3E213T-W22	1,129	N1	152	1.25	4.41	89.5	19.517	208-230/460	
		1200	213/5T	00312ET3H213T-W22	1,129	N1	149	1.25	3.53	89.5	19.517	575	
		900	213/5T	00309EP3E215T-W22	1,609	W1	180	1.25	4.33	84.0	19.517	208-230/460	30
		900	213/5T	00309ET3E215T-W22	2,115	N1	188	1.25	4.56	85.5	19.517	208-230/460	

Continued on next page

Refer to electrical and mechanical data sections for additional technical information. Please refer to back cover for description of "NOTES"

For detailed specifications, data sheets, drawings and performance curves visit http://catalog.wegelectric.com

Data subject to change without notice.

TEFC – Foot Mount *continued*

HP	kW	RPM	NEMA Frame	Catalog Number	List Price	Mult. Symbol	Approx. Shipping Weight (lbs)	Service Factor	FL Amps @ High	FL. Eff (%)	"C" Dimension (in)	Voltage (V)	Notes
5	3.7	3600	182/4T	00536ET3E184T-W22	873	N1	109	1.25	5.90	88.5	15.860	208-230/460	
		3600	182/4T	00536ET3H184T-W22	873	N1	106	1.25	4.72	88.5	15.860	575	
		1800	182/4T	00518ET3E184T-W22	772	N1	105	1.25	6.45	89.5	15.860	208-230/460	
		1800	182/4T	00518ET3H184T-W22	772	N1	331	1.25	5.16	89.5	15.860	575	
		1800	182/4T	00518ET3P184T-W22	772	N1	106	1.25	14.8	89.5	15.860	200	
		1200	213/5T	00512ET3E215T-W22	1,332	N1	179	1.25	6.83	89.5	19.517	208-230/460	
		1200	213/5T	00512ET3H215T-W22	1,332	N1	177	1.25	5.46	89.5	19.517	575	
		900	254/6T	00509EP3E254T-W22	2,703	W1	268	1.25	7.76	85.5	24.945	208-230/460	30
		900	254/6T	00509EP3H254T-W22	2,703	W1	253	1.25	6.21	85.5	24.945	575	30
		900	254/6T	00509ET3E254T-W22	3,301	N1	284	1.25	7.58	87.5	24.945	208-230/460	
7.5	5.5	3600	182/4T	00736ET3E184T-W22	1,074	N1	107	1.25	8.76	89.5	15.860	208-230/460	
		3600	213/5T	00736ET3E213T-W22	1,125	N1	155	1.25	8.76	89.5	19.517	208-230/460	
		3600	213/5T	00736ET3H213T-W22	1,125	N1	155	1.25	7.01	89.5	19.517	575	
		1800	213/5T	00718ET3E213T-W22	1,089	N1	169	1.25	9.00	91.7	19.517	208-230/460	
		1800	213/5T	00718ET3H213T-W22	1,089	N1	167	1.25	7.20	91.7	19.517	575	
		1800	213/5T	00718ET3P213T-W22	1,089	N1	167	1.25	20.7	91.7	19.517	200	
		1200	254/6T	00712ET3E254T-W22	2,065	N1	292	1.25	9.48	91.0	24.945	208-230/460	
		1200	254/6T	00712ET3H254T-W22	2,065	N1	292	1.25	7.58	91.0	24.945	575	
		900	254/6T	00709EP3E256T-W22	2,856	W1	297	1.25	11.5	85.5	24.945	208-230/460	30
		900	254/6T	00709ET3E256T-W22	3,658	N1	313	1.25	11.1	87.5	24.945	208-230/460	
10	7.5	3600	213/5T	01036ET3E215T-W22	1,332	N1	183	1.25	11.6	90.2	19.517	208-230/460	
		3600	213/5T	01036ET3H215T-W22	1,332	N1	182	1.25	9.28	90.2	19.517	575	
		1800	213/5T	01018ET3E215T-W22	1,273	N1	192	1.25	12.4	91.7	19.517	208-230/460	
		1800	213/5T	01018ET3H215T-W22	1,273	N1	192	1.25	9.92	91.7	19.517	575	
		1800	213/5T	01018ET3P215T-W22	1,273	N1	192	1.25	28.5	91.7	19.517	200	
		1200	254/6T	01012ET3E256T-W22	2,396	N1	321	1.25	12.9	91.0	24.945	208-230/460	
		1200	254/6T	01012ET3H256T-W22	2,396	N1	320	1.25	10.3	91.0	24.945	575	
		900	284/6T	01009EP3E284T-W22	3,786	W1	380	1.25	13.0	88.5	27.929	208-230/460	30
		900	284/6T	01009ET3E284T-W22	4,634	N1	362	1.25	13.4	90.2	27.929	208-230/460	

Continued on next page

TEFC – Foot Mount *continued*

HP	kW	RPM	NEMA Frame	Catalog Number	List Price	Mult. Symbol	Approx. Shipping Weight (lbs)	Service Factor	FL Amps @ High	FL. Eff (%)	"C" Dimension (in)	Voltage (V)	Notes
15	11	3600	213/5T	01536ET3E215T-W22	1,697	N1	194	1.25	17.0	91.0	19.517	208-230/460	
		3600	254/6T	01536ET3E254T-W22	1,824	N1	279	1.25	17.2	91.0	24.945	208-230/460	
		3600	254/6T	01536ET3H254T-W22	1,824	N1	279	1.25	13.8	91.0	24.945	575	
		1800	254/6T	01518ET3E254T-W22	1,848	N1	333	1.25	18.0	92.4	24.945	208-230/460	
		1800	254/6T	01518ET3H254T-W22	1,848	N1	327	1.25	14.4	92.4	24.945	575	
		1800	254/6T	01518ET3P254T-W22	1,848	N1	327	1.25	41.4	92.4	24.945	200	
		1200	284/6TS	01512ET3E284TS-W22	3,291	N1	360	1.25	17.9	91.7	26.557	208-230/460	
		1200	284/6T	01512ET3E284T-W22	3,291	N1	402	1.25	17.9	91.7	27.929	208-230/460	
		1200	284/6T	01512ET3H284T-W22	3,291	N1	401	1.25	14.3	91.7	27.929	575	
		900	284/6T	01509EP3E286T-W22	4,291	W1	432	1.25	19.0	88.5	27.929	208-230/460	30
		900	284/6T	01509ET3E286T-W22	5,368	N1	431	1.25	19.4	90.2	27.929	208-230/460	
		900	284/6T	01509ET3H286T-W22	5,368	N1	431	1.25	15.5	90.2	27.929	575	
20	15	3600	254/6T	02036ET3E256T-W22	2,382	N1	316	1.25	23.2	91.0	24.945	208-230/460	
		3600	254/6T	02036ET3H256T-W22	2,382	N1	316	1.25	18.6	91.0	24.945	575	
		1800	254/6T	02018ET3E256T-W22	2,201	N1	363	1.25	24.1	93.0	24.945	208-230/460	
		1800	254/6T	02018ET3H256T-W22	2,201	N1	363	1.25	19.3	93.0	24.945	575	
		1800	254/6T	02018ET3P256T-W22	2,201	N1	364	1.25	55.4	93.0	24.945	200	
		1200	284/6T	02012ET3E286T-W22	3,962	N1	450	1.25	24.2	91.7	27.929	208-230/460	
		1200	284/6T	02012ET3H286T-W22	3,962	N1	449	1.25	19.4	91.7	27.929	575	
		900	324/6T	02009EP3E324T-W22	5,277	W1	510	1.25	28.4	89.5	31.116	208-230/460	30
		900	324/6T	02009ET3E324T-W22	6,339	N1	532	1.25	28.3	91.0	31.116	208-230/460	
		900	324/6T	02009ET3H324T-W22	6,339	N1	531	1.25	22.6	91.0	31.116	575	
25	18.5	3600	284/6TS	02536ET3E284TS-W22	2,998	N1	400	1.25	28.5	91.7	26.557	208-230/460	
		3600	284/6TS	02536ET3H284TS-W22	2,998	N1	399	1.25	22.8	91.7	26.557	575	
		1800	284/6TS	02518ET3E284TS-W22	2,743	N1	425	1.25	29.5	93.6	26.557	208-230/460	
		1800	284/6T	02518ET3E284T-W22	2,743	N1	433	1.25	29.5	93.6	27.929	208-230/460	
		1800	284/6T	02518ET3H284T-W22	2,743	N1	429	1.25	23.6	93.6	27.929	575	
		1200	324/6T	02512ET3E324T-W22	4,737	N1	569	1.25	30.4	93.0	31.116	208-230/460	
		1200	324/6T	02512ET3H324T-W22	4,737	N1	568	1.25	24.3	93.0	31.116	575	
		900	324/6T	02509EP3E326T-W22	5,924	W1	565	1.25	35.5	89.5	31.116	208-230/460	30
		900	324/6T	02509ET3E326T-W22	7,315	N1	590	1.25	35.9	91.0	31.116	208-230/460	
30	22	3600	284/6TS	03036ET3E286TS-W22	3,561	N1	430	1.25	33.8	91.7	26.557	208-230/460	
		3600	284/6TS	03036ET3H286TS-W22	3,561	N1	430	1.25	27.0	91.7	26.557	575	
		1800	284/6TS	03018ET3E286TS-W22	3,223	N1	479	1.25	35.1	93.6	27.929	208-230/460	
		1800	284/6T	03018ET3E286T-W22	3,223	N1	482	1.25	35.1	93.6	27.929	208-230/460	
		1800	284/6T	03018ET3H286T-W22	3,223	N1	480	1.25	28.1	93.6	27.929	575	
		1200	324/6T	03012ET3E326T-W22	5,273	N1	621	1.25	35.8	93.0	31.116	208-230/460	
		1200	324/6T	03012ET3H326T-W22	5,273	N1	619	1.25	28.6	93.0	31.116	575	
		900	364/5T	03009EP3E364T-W22	8,446	W1	878	1.25	37.0	91.0	34.251	208-230/460	30
		900	364/5T	03009ET3E364T-W22	11,215	N1	905	1.25	37.0	92.4	34.251	208-230/460	

Continued on next page

TEFC – Foot Mount *continued*

HP	kW	RPM	NEMA Frame	Catalog Number	List Price	Mult. Symbol	Approx. Shipping Weight (lbs)	Service Factor	FL Amps @ High	FL. Eff (%)	"C" Dimension (in)	Voltage (V)	Notes
40	30	3600	324/6TS	04036ET3E324TS-W22	4,725	N1	572	1.25	45.8	92.4	29.616	208-230/460	
		3600	324/6TS	04036ET3H324TS-W22	4,725	N1	564	1.25	36.6	92.4	29.616	575	
		1800	324/6T	04018ET3E324TS-W22	4,178	N1	435	1.25	48.2	94.1	31.116	208-230/460	
		1800	324/6T	04018ET3E324T-W22	4,178	N1	595	1.25	48.2	94.1	31.116	208-230/460	
		1800	324/6T	04018ET3H324T-W22	4,178	N1	595	1.25	38.6	94.1	31.116	575	
		1800	324/6T	04018ET3P324T-W22	4,178	N1	564	1.25	111	94.1	31.116	200	
		1200	364/5T	04012ET3E364T-W22	7,284	N1	950	1.25	46.5	94.1	34.251	208-230/460	
		1200	364/5T	04012ET3H364T-W22	7,284	N1	879	1.25	37.2	94.1	34.251	575	
		900	364/5T	04009EP3E365T-W22	9,973	W1	937	1.25	49.9	91.0	39.730	208-230/460	30
		900	364/5T	04009ET3E365T-W22	12,194	N1	985	1.25	50.0	92.4	34.251	208-230/460	
50	37	3600	324/6TS	05036ET3E326TS-W22	5,316	N1	605	1.25	56.1	93.0	29.616	208-230/460	
		3600	324/6TS	05036ET3H326TS-W22	5,316	N1	597	1.25	44.9	93.0	29.616	575	
		1800	324/6TS	05018ET3E326TS-W22	5,100	N1	462	1.25	59.2	94.5	29.616	208-230/460	
		1800	324/6T	05018ET3E326T-W22	5,100	N1	634	1.25	59.2	94.5	31.116	208-230/460	
		1800	324/6T	05018ET3H326T-W22	5,100	N1	461	1.25	47.4	94.5	31.116	575	
		1200	364/5T	05012ET3E365T-W22	8,518	N1	1009	1.25	57.4	94.1	34.251	208-230/460	
		1200	364/5T	05012ET3H365T-W22	8,518	N1	989	1.25	45.9	94.1	34.251	575	
		900	404/5T	05009EP3E404T-W22	11,339	W1	1253	1.25	61.0	91.7	39.730	208-230/460	30
		900	404/5T	05009ET3E404T-W22	17,648	N1	1227	1.25	60.0	93.0	39.730	208-230/460	
60	45	3600	364/5TS	06036ET3E364TS-W22	7,552	N1	954	1.25	67.0	93.6	32.276	208-230/460	
		3600	364/5TS	06036ET3G364TS-W22	7,552	N1	992	1.25	67.0	93.6	32.276	460	
		1800	364/5TS	06018ET3E364TS-W22	7,389	N1	1022	1.25	68.3	95.0	32.276	208-230/460	
		1800	364/5T	06018ET3E364T-W22	7,389	N1	1027	1.25	68.3	95.0	34.251	208-230/460	
		1800	364/5T	06018ET3G364T-W22	7,389	N1	1013	1.25	68.3	95.0	34.251	460	
		1800	364/5T	06018ET3H364T-W22	7,389	N1	1012	1.25	54.6	95.0	34.251	575	
		1200	404/5T	06012ET3E404T-W22	10,497	N1	1213	1.25	69.5	94.5	39.730	208-230/460	
		1200	404/5T	06012ET3ERB404T-W22	10,497	N1	1214	1.25	69.5	94.5	39.730	208-230/460	14
		1200	404/5T	06012ET3G404T-W22	10,497	N1	1213	1.25	69.5	94.5	39.730	460	
		900	404/5T	06009EP3E405T-W22	12,908	W1	1268	1.25	74.2	91.7	39.730	208-230/460	30
		900	404/5T	06009ET3E405T-W22	20,443	N1	1281	1.25	73.0	93.0	39.730	208-230/460	

Continued on next page

GENERAL PURPOSE

TEFC – Foot Mount *continued*

HP	kW	RPM	NEMA Frame	Catalog Number	List Price	Mult. Symbol	Approx. Shipping Weight (lbs)	Service Factor	FL Amps @ High	FL. Eff (%)	"C" Dimension (in)	Voltage (V)	Notes
		3600	364/5TS	07536ET3E365TS-W22	9,091	N1	965	1.25	81.9	93.6	32.276	208-230/460	
		3600	364/5TS	07536ET3G365TS-W22	9,091	N1	966	1.25	81.9	93.6	32.276	460	
		1800	364/5TS	07518ET3E365TS-W22	8,705	N1	1039	1.25	84.1	95.4	32.276	208-230/460	
		1800	364/5T	07518ET3E365T-W22	8,705	N1	1044	1.25	84.1	95.4	34.251	208-230/460	
		1800	364/5T	07518ET3G365T-W22	8,705	N1	1045	1.25	84.1	95.4	34.251	460	
		1800	364/5T	07518ET3H365T-W22	8,705	N1	1054	1.25	67.3	95.4	34.251	575	
75	55	1200	404/5T	07512ET3E405T-W22	12,058	N1	882	1.25	84.9	94.5	39.730	208-230/460	
		1200	404/5T	07512ET3ERB405T-W22	12,058	N1	888	1.25	84.9	94.5	39.730	208-230/460	14
		1200	404/5T	07512ET3G405T-W22	12,058	N1	1236	1.25	84.9	94.5	39.730	460	
		1200	404/5T	07512ET3GRB405T-W22	12,058	N1	1210	1.25	84.9	94.5	39.730	460	14
		1200	404/5T	07512ET3H405T-W22	12,058	N1	1478	1.25	67.9	94.5	39.730	575	
		900	444/5T	07509EP3E444T-W22	16,918	W1	1704	1.25	92.8	93.0	44.950	208-230/460	30
		900	444/5T	07509ET3E444T-W22	23,334	N1	1707	1.25	93.0	93.6	44.950	208-230/460	
		3600	404/5TS	10036ET3E405TS-W22	12,002	N1	1193	1.25	110	94.1	36.732	208-230/460	
		3600	404/5TS	10036ET3G405TS-W22	12,002	N1	1182	1.25	110	94.1	36.732	460	
		3600	404/5TS	10036ET3H405TS-W22	12,002	N1	1180	1.25	88.0	94.1	36.732	575	
		1800	404/5TS	10018ET3E405TS-W22	11,689	N1	1267	1.25	111	95.4	36.732	208-230/460	
		1800	404/5T	10018ET3E405T-W22	11,689	N1	1292	1.25	111	95.4	39.730	208-230/460	
		1800	404/5T	10018ET3ERB405T-W22	11,689	N1	1298	1.25	111	95.4	39.730	208-230/460	14
		1800	404/5T	10018ET3G405T-W22	11,689	N1	1278	1.25	111	95.4	39.730	460	
		1800	404/5T	10018ET3GRB405T-W22	11,689	N1	1286	1.25	111	95.4	39.730	460	14
		1800	404/5T	10018ET3H405T-W22	11,689	N1	1281	1.25	88.8	95.4	39.730	575	
100	75	1800	404/5T	10018ET3HRB405T-W22	11,689	N1	1295	1.25	88.8	95.4	39.730	575	14
		1200	444/5T	10012ET3E444T-W22	15,631	N1	1885	1.25	121	95.0	44.950	208-230/460	
		1200	444/5T	10012ET3ERB444T-W22	15,631	N1	1903	1.25	121	95.0	44.950	208-230/460	14
		1200	444/5T	10012ET3G444T-W22	15,631	N1	1883	1.25	121	95.0	44.950	460	
		1200	444/5T	10012ET3GRB444T-W22	15,631	N1	1901	1.25	121	95.0	44.950	460	14
		1200	444/5T	10012ET3H444T-W22	15,631	N1	1883	1.25	96.8	95.0	44.950	575	
		900	444/5T	10009EP3E445T-W22	21,909	W1	1896	1.25	127	93.0	44.950	208-230/460	30
		900	444/5T	10009EP3G445T-W22	21,909	W1	1896	1.25	127	93.0	44.950	460	30
		900	444/5T	10009ET3E445T-W22	26,988	N1	1900	1.25	127	94.1	44.950	208-230/460	
		900	444/5T	10009ET3G445T-W22	26,988	N1	1866	1.25	127	94.1	44.950	460	

Continued on next page

Refer to electrical and mechanical data sections for additional technical information. Please refer to back cover for description of "NOTES"

For detailed specifications, data sheets, drawings and performance curves visit http://catalog.wegelectric.com

Data subject to change without notice.

TEFC – Foot Mount *continued*

HP	kW	RPM	NEMA Frame	Catalog Number	List Price	Mult. Symbol	Approx. Shipping Weight (lbs)	Service Factor	FL Amps @ High	FL. Eff (%)	"C" Dimension (in)	Voltage (V)	Notes
		3600	444/5TS	12536ET3E444TS-W22	15,350	N1	1836	1.15	134	95.0	41.200	208-230/460	
		3600	444/5TS	12536ET3G444TS-W22	15,350	N1	1835	1.15	134	95.0	41.200	460	
		3600	444/5TS	12536ET3H444TS-W22	15,350	N1	1821	1.15	107	95.0	41.200	575	
		1800	444/5TS	12518ET3E444TS-W22	14,748	N1	1796	1.15	139	95.4	41.200	208-230/460	
		1800	444/5T	12518ET3E444T-W22	14,748	N1	1824	1.15	139	95.4	44.950	208-230/460	
		1800	444/5T	12518ET3ERB444T-W22	14,748	N1	1862	1.15	139	95.4	44.950	208-230/460	14
		1800	444/5T	12518ET3G444T-W22	14,748	N1	1847	1.15	139	95.4	44.950	460	
		1800	444/5T	12518ET3GRB444T-W22	14,748	N1	1866	1.15	139	95.4	44.950	460	14
125	90	1800	444/5T	12518ET3H444T-W22	14,748	N1	1858	1.15	111	95.4	44.950	575	
		1800	444/5T	12518ET3Q444T-W22	14,748	N1	1754	1.15	139	95.4	44.950	460	
		1200	444/5T	12512ET3E445T-W22	17,947	N1	2004	1.15	143	95.0	44.950	208-230/460	
		1200	444/5T	12512ET3ERB445T-W22	17,947	N1	2041	1.15	143	95.0	44.950	208-230/460	14
		1200	444/5T	12512ET3G445T-W22	17,947	N1	2022	1.15	143	95.0	44.950	460	
		1200	444/5T	12512ET3GRB445T-W22	17,947	N1	2038	1.15	143	95.0	44.950	460	14
		900	445/7T	12509EP3E447T-W22	25,308	W1	2248	1.15	151	93.6	48.701	208-230/460	30
		900	445/7T	12509EP3G447T-W22	25,308	W1	2248	1.15	151	93.6	48.701	460	30
		900	445/7T	12509ET3G447T-W22	28,175	N1	2250	1.15	151	94.5	48.701	460	
		3600	444/5TS	15036ET3E445TS-W22	18,882	N1	1941	1.15	161	95.0	41.200	208-230/460	
		3600	444/5TS	15036ET3G445TS-W22	18,882	N1	1943	1.15	161	95.0	41.200	460	
		3600	444/5TS	15036ET3Q445TS-W22	18,882	N1	1858	1.15	161	95.0	41.200	460	
		1800	444/5T	15018ET3E445T-W22	17,420	N1	1924	1.15	170	95.8	44.950	208-230/460	
		1800	444/5TS	15018ET3G445TS-W22	17,420	N1	1869	1.15	170	95.8	41.200	460	
		1800	444/5T	15018ET3G445T-W22	17,420	N1	1917	1.15	170	95.8	44.950	460	
		1800	444/5T	15018ET3GRB445T-W22	17,420	N1	1935	1.15	170	95.8	44.950	460	14
150	110	1800	444/5T	15018ET3H445T-W22	17,420	N1	1933	1.15	136	95.8	44.950	575	
		1800	444/5T	15018ET3HRB445T-W22	17,420	N1	1952	1.15	136	95.8	44.950	575	14
		1800	444/5T	15018ET3Q445T-W22	17,420	N1	1841	1.15	170	95.8	44.950	460	
		1200	445/7T	15012ET3E447T-W22	20,639	N1	2529	1.15	176	95.8	48.701	208-230/460	
		1200	445/7T	15012ET3G447T-W22	20,639	N1	2484	1.15	176	95.8	48.701	460	
		1200	445/7T	15012ET3GRB447T-W22	20,639	N1	2502	1.15	176	95.8	48.701	460	14
		900	447/9T	15009EP3G449T-W22	28,688	W1	2500	1.15	184	93.6	56.338	460	30
		900	447/9T	15009ET3G449T-W22	30,677	N1	3803	1.15	185	94.5	56.338	460	

Continued on next page

Refer to electrical and mechanical data sections for additional technical information. Please refer to back cover for description of “NOTES”

For detailed specifications, data sheets, drawings and performance curves visit http://catalog.wegelectric.com

GENERAL PURPOSE

TEFC – Foot Mount *continued*

HP	kW	RPM	NEMA Frame	Catalog Number	List Price	Mult. Symbol	Approx. Shipping Weight (lbs)	Service Factor	FL Amps @ High	FL. Eff (%)	"C" Dimension (in)	Voltage (V)	Notes
200	150	3600	445/7TS	20036ET3E447TS-W22	23,562	N1	1824	1.15	219	95.4	44.951	208-230/460	
		3600	445/7TS	20036ET3G447TS-W22	23,562	N1	2248	1.15	219	95.4	44.951	460	
		3600	504/5S	20036ET3G504S-W22	23,562	N1	2072	1.15	222	95.4	48.215	460	
		1800	445/7T	20018ET3E447T-W22	21,098	N1	2342	1.15	230	96.2	48.701	208-230/460	
		1800	445/7T	20018ET3G447TS-W22	21,098	N1	2293	1.15	230	96.2	48.701	460	
		1800	445/7T	20018ET3G447T-W22	21,098	N1	2327	1.15	230	96.2	48.701	460	
		1800	504/5	20018ET3G504-W22	21,098	N1	2063	1.15	228	96.2	54.095	460	
		1800	445/7T	20018ET3GRB447T-W22	21,098	N1	2346	1.15	230	96.2	48.701	460	14
		1800	445/7T	20018ET3H447T-W22	21,098	N1	2333	1.15	184	96.2	48.701	575	
		1800	445/7T	20018ET3HRB447T-W22	21,098	N1	1850	1.15	184	96.2	48.701	575	14
		1200	447/9T	20012ET3E449T-W22	25,255	N1	2495	1.15	237	95.8	56.338	208-230/460	
		1200	445/7T	20012ET3G447T-W22	25,133	N1	2704	1.15	237	95.8	48.701	460	
		1200	447/9T	20012ET3G449T-W22	25,255	N1	2933	1.15	237	95.8	56.338	460	
		1200	504/5	20012ET3G505-W22	25,255	N1	2467	1.15	237	95.8	54.095	460	
		1200	445/7T	20012ET3GRB447T-W22	25,133	N1	2722	1.15	237	95.8	48.701	460	14
		1200	447/9T	20012ET3GRB449T-W22	25,255	N1	2954	1.15	237	95.8	56.338	460	14
		900	447/9T	20009EP3G449T-W22	43,236	W1	3509	1.15	252	94.5	56.338	460	30
		900	447/9T	20009ET3G449T-W22	49,899	N1	4212	1.15	254	95.0	56.338	460	
250	185	3600	445/7TS	25036EP3E447TS-W22	21,318	W1	2172	1.15	270	95.4	44.951	208-230/460	30
		3600	447/9TS	25036EP3E449TS-W22	24,878	W1	2172	1.15	270	95.4	52.588	208-230/460	30
		3600	445/7TS	25036EP3G447TS-W22	21,318	W1	2496	1.15	270	95.4	44.951	460	30
		3600	447/9TS	25036EP3G449TS-W22	24,878	W1	2548	1.15	270	95.4	52.588	460	30
		3600	445/7TS	25036EP3Q447TS-W22	21,318	W1	2275	1.15	270	95.4	44.951	460	30
		3600	447/9TS	25036EP3Q449TS-W22	24,878	W1	2275	1.15	270	95.4	52.588	460	30
		3600	445/7TS	25036ET3G447TS-W22	29,846	N1	2479	1.15	266	95.8	44.951	460	
		3600	447/9TS	25036ET3G449TS-W22	33,173	N1	2556	1.15	266	95.8	52.588	460	
		1800	445/7T	25018EP3G447T-W22	23,492	W1	2413	1.15	283	95.4	48.701	460	30
		1800	447/9T	25018EP3G449T-W22	25,315	W1	2641	1.15	283	95.4	56.338	460	30
		1800	445/7T	25018EP3GRB447T-W22	23,435	W1	2438	1.15	283	95.4	48.701	460	14;30
		1800	447/9T	25018EP3GRB449T-W22	25,315	W1	2655	1.15	283	95.4	56.338	460	14;30
		1800	445/7T	25018ET3G447T-W22	26,716	N1	2361	1.15	281	96.2	48.701	460	
		1800	447/9T	25018ET3G449T-W22	26,803	N1	2652	1.15	281	96.2	56.338	460	
		1800	445/7T	25018ET3GRB447T-W22	26,716	N1	2379	1.15	281	96.2	48.701	460	14
		1800	447/9T	25018ET3GRB449T-W22	26,803	N1	2682	1.15	281	96.2	56.338	460	14
		1800	445/7T	25018ET3HRB447T-W22	26,716	N1	2414	1.15	225	96.2	48.701	575	14
		1200	447/9T	25012EP3G449T-W22	32,322	W1	4002	1.15	291	95.0	56.338	460	30
		1200	447/9T	25012EP3GRB449T-W22	32,322	W1	4002	1.15	291	95.0	56.338	460	14;30
		1200	447/9T	25012ET3E449T-W22	35,555	N1	3966	1.15	292	95.8	56.338	208-230/460	
		1200	447/9T	25012ET3G449T-W22	35,555	N1	2680	1.15	292	95.8	56.338	460	
		1200	586/7	25012ET3G586/7-W22	39,631	N1	3593	1.15	299	95.8	61.902	460	
		1200	447/9T	25012ET3GRB449T-W22	35,555	N1	3104	1.15	292	95.8	56.338	460	14
		900	L447/9T	25009ET3G449T-W22	56,168	N1	4639	1.15	308	95.4	57.181	460	

Continued on next page

Refer to electrical and mechanical data sections for additional technical information. Please refer to back cover for description of "NOTES"

For detailed specifications, data sheets, drawings and performance curves visit http://catalog.wegelectric.com

Data subject to change without notice.

GENERAL PURPOSE

TEFC – Foot Mount *continued*

HP	kW	RPM	NEMA Frame	Catalog Number	List Price	Mult. Symbol	Approx. Shipping Weight (lbs)	Service Factor	FL Amps @ High	FL. Eff (%)	"C" Dimension (in)	Voltage (V)	Notes
300	220	3600	447/9TS	30036EP3G449TS-W22	33,348	W1	2821	1.15	322	95.4	52.588	460	30
		3600	447/9TS	30036ET3G449TS-W22	38,269	N1	2817	1.15	320	95.8	52.588	460	
		1800	447/9T	30018EP3G449T-W22	29,765	W1	2578	1.15	337	95.4	56.338	460	30
		1800	447/9T	30018EP3GRB449T-W22	29,765	W1	2857	1.15	337	95.4	56.338	460	14;30
		1800	447/9T	30018EP3H449T-W22	29,765	W1	2850	1.15	270	95.4	56.338	575	30
		1800	447/9TS	30018ET3G449TS-W22	31,384	N1	2665	1.15	330	96.2	52.588	460	
		1800	447/9T	30018ET3G449T-W22	31,384	N1	2566	1.15	330	96.2	56.338	460	
		1800	447/9T	30018ET3GRB449T-W22	31,384	N1	2587	1.15	330	96.2	56.338	460	14
		1200	447/9T	30012EP3G449T-W22	34,943	W1	3127	1.15	350	95.0	56.338	460	30
		1200	447/9T	30012EP3GRB449T-W22	34,943	W1	4487	1.15	350	95.0	56.338	460	14;30
		1200	447/9T	30012ET3G449T-W22	38,437	N1	3127	1.15	347	95.8	56.338	460	
		1200	586/7	30012ET3G586/7-W22	44,301	N1	3962	1.15	356	95.8	61.902	460	
		1200	447/9T	30012ET3GRB449T-W22	38,437	N1	3146	1.15	347	95.8	56.338	460	14
		900	L447/9T	30009ET3G449T-W22	58,655	N1	3755	1.15	371	95.4	57.181	460	
350	260	3600	447/9TS	35036EP3G449TS-W22	36,622	W1	2982	1.15	378	95.8	52.588	460	30
		3600	447/9TS	35036ET3G449TS-W22	43,805	N1	2972	1.15	377	96.2	52.588	460	
		1800	447/9T	35018EP3G449T-W22	36,337	W1	2821	1.15	396	95.8	56.338	460	30
		1800	447/9T	35018EP3GRB449T-W22	36,337	W1	2840	1.15	396	95.8	56.338	460	14;30
		1800	447/9T	35018ET3G449TS-W22	36,517	N1	2974	1.15	394	96.2	56.338	460	
		1800	447/9T	35018ET3G449T-W22	36,517	N1	3152	1.15	394	96.2	56.338	460	
		1800	447/9T	35018ET3GRB449T-W22	36,517	N1	3737	1.15	394	96.2	56.338	460	14
		1200	586/7	35012EP3G586/7-W22	47,249	W1	4185	1.15	422	95.4	61.902	460	30
		1200	L447/9T	35012ET3G449T-W22	47,633	N1	3709	1.15	415	95.8	57.181	460	
		1200	L447/9T	35012ET3GRB449T-W22	47,633	N1	3724	1.15	415	95.8	57.181	460	14
		900	586/7	35009EP3G586/7-W22	65,217	W1	4966	1.00	429	95.0	61.902	460	1;30
		900	586/7	35009ET3G586/7-W22	64,873	N1	5028	1.00	426	95.8	61.902	460	1
400	300	3600	L447/9TS	40036ET3G449TS-W22	44,605	N1	3292	1.15	432	95.8	53.431	460	
		1800	L447/9TS	40018ET3G449TS-W22	43,805	N1	3276	1.15	455	96.2	53.431	460	
		1800	L447/9T	40018ET3G449T-W22	43,805	N1	3320	1.15	455	96.2	57.181	460	
		1800	L447/9T	40018ET3GRB449T-W22	43,805	N1	4686	1.15	455	96.2	57.181	460	14
		1800	L447/9T	40018ET3H449T-W22	43,805	N1	3316	1.15	364	96.2	57.181	575	
		1200	L447/9T	40012ET3G449T-W22	52,307	N1	3734	1.15	477	95.8	57.181	460	
		1200	586/7	40012ET3G586/7-W22	56,201	N1	4581	1.15	483	96.2	61.902	460	
		1200	L447/9T	40012ET3GRB449T-W22	52,307	N1	3739	1.15	477	95.8	57.181	460	14
		900	588/9	40009ET3G588/9-W22	66,123	N1	3308	1.00	498	95.7	69.381	460	1

Continued on next page

GENERAL PURPOSE

TEFC – Foot Mount *continued*

HP	kW	RPM	NEMA Frame	Catalog Number	List Price	Mult. Symbol	Approx. Shipping Weight (lbs)	Service Factor	FL Amps @ High	FL. Eff (%)	"C" Dimension (in)	Voltage (V)	Notes
450	330	3600	L447/9TS	45036ET3G449TS-W22	49,610	N1	3492	1.00	475	95.8	53.431	460	1
		1800	586/7	45018EP3G586/7-W22	46,053	W1	5204	1.15	503	95.8	61.902	460	30
		1800	L447/9T	45018ET3G449T-W22	48,010	N1	3524	1.15	501	96.2	57.181	460	
		1800	L447/9T	45018ET3GRB449T-W22	48,010	N1	3542	1.15	501	96.2	57.181	460	14
		1200	586/7	45012EP3G586/7-W22	56,592	W1	4933	1.00	536	95.4	61.902	460	1;30
		1200	586/7	45012EP3GRB586/7-W22	56,592	W1	5248	1.00	536	95.4	61.902	460	1;14;30
		1200	586/7	45012EP3H586/7-W22	56,592	W1	5248	1.00	429	95.4	61.902	575	1;30
		1200	586/7	45012ET3G586/7-W22	62,251	N1	4877	1.00	532	96.2	61.902	460	1
		1200	586/7	45012ET3GRB586/7-W22	62,251	N1	5248	1.00	532	96.2	61.902	460	1;14
		900	588/9	45009ET3G588/9-W22	68,715	N1	5189	1.00	554	95.8	69.381	460	1
500	370	3600	586/7S	50036ET3G586/7S-W22	56,305	N1	4571	1.15	530	96.2	55.027	460	
		1800	L447/9T	50018ET3G449T-W22	50,594	N1	3652	1.00	561	96.2	57.181	460	1;19
		1800	L447/9T	50018ET3GRB449T-W22	50,594	N1	5424	1.00	561	96.2	57.181	460	1;14
		1200	586/7	50012ET3G586/7-W22	62,962	N1	4896	1.00	603	96.2	61.902	460	1
600	450	3600	588/9S	60036ET3G588/9S-W22	64,635	N1	5261	1.00	650	96.5	62.506	460	1
		1800	586/7	60018ET3G586/7-W22	60,316	N1	4900	1.00	665	96.5	61.902	460	1
		1200	588/9	60012ET3G588/9-W22	71,374	N1	6000	1.00	743	96.2	69.381	460	1
650	480	3600	588/9S	65036ET3G588/9S-W22	66,835	N1	4805	1.00	685	96.6	62.506	460	1
		1800	588/9	65018ET3G588/9-W22	66,701	N1	3308	1.00	734	96.6	69.381	460	1
700	515	3600	588/9S	70036ET3G588/9S-W22	71,254	N1	5754	1.00	736	96.6	62.506	460	1
		1800	588/9	70018ET3G588/9-W22	71,185	N1	5893	1.00	788	96.6	69.381	460	1
750	550	1800	588/9	75018ET3G588/9-W22	74,025	N1	3308	1.00	840	96.7	69.381	460	1

Refer to electrical and mechanical data sections for additional technical information. Please refer to back cover for description of “NOTES”

For detailed specifications, data sheets, drawings and performance curves visit http://catalog.wegelectric.com

Data subject to change without notice.



TEFC – C-Flange – Foot Mount

HP	kW	RPM	NEMA Frame	Catalog Number	List Price	Mult. Symbol	Approx. Shipping Weight (lbs)	Service Factor	FL Amps @ High	FL. Eff (%)	"C" Dimension (in)	Voltage (V)	Notes
1	0.75	3600	143/5TC	00136ET3E143TC-W22	566	N1	43	1.25	1.43	78.5	13.346	208-230/460	
		1800	143/5TC	00118ET3E143TC-W22	555	N1	49	1.25	1.41	85.5	13.346	208-230/460	
		1800	143/5TC	00118ET3H143TC-W22	555	N1	49	1.25	1.13	85.5	13.346	575	
		1200	143/5TC	00112ET3E145TC-W22	636	N1	56	1.25	1.73	82.5	13.346	208-230/460	
1.5	1.1	3600	143/5TC	00156ET3E143TC-W22	571	N1	48	1.25	1.91	84.0	13.346	208-230/460	
		3600	143/5TC	00156ET3H143TC-W22	571	N1	45	1.25	1.53	84.0	13.346	575	
		1800	143/5TC	00158ET3E145TC-W22	579	N1	55	1.25	2.02	86.5	13.346	208-230/460	
		1800	143/5TC	00158ET3H145TC-W22	579	N1	57	1.25	1.62	86.5	13.346	575	
		1200	182/4TC	00152ET3E182TC-W22	792	N1	100	1.25	2.39	87.5	15.860	208-230/460	
2	1.5	3600	143/5TC	00236ET3E145TC-W22	619	N1	58	1.25	2.53	85.5	13.346	208-230/460	
		3600	143/5TC	00236ET3H145TC-W22	619	N1	56	1.25	2.02	85.5	13.346	575	
		1800	143/5TC	00218ET3E145TC-W22	640	N1	59	1.25	2.61	86.5	13.346	208-230/460	
		1800	143/5TC	00218ET3H145TC-W22	640	N1	57	1.25	2.09	86.5	13.346	575	
		1200	182/4TC	00212ET3E184TC-W22	857	N1	112	1.25	3.23	88.5	15.860	208-230/460	
3	2.2	3600	182/4TC	00336ET3E182TC-W22	802	N1	103	1.25	3.63	86.5	15.860	208-230/460	
		3600	182/4TC	00336ET3H182TC-W22	802	N1	103	1.25	2.90	86.5	15.860	575	
		1800	182/4TC	00318ET3E182TC-W22	700	N1	100	1.25	3.88	89.5	15.860	208-230/460	
		1800	182/4TC	00318ET3H182TC-W22	700	N1	100	1.25	3.10	89.5	15.860	575	
		1200	213/5TC	00312ET3E213TC-W22	1,180	N1	154	1.25	4.41	89.5	19.517	208-230/460	
		900	213/5TC	00309ET3E215TC-W22	2,166	N1	192	1.25	4.56	85.5	19.517	208-230/460	
5	3.7	3600	182/4TC	00536ET3E184TC-W22	911	N1	110	1.25	5.90	88.5	15.860	208-230/460	
		3600	182/4TC	00536ET3H184TC-W22	911	N1	112	1.25	4.72	88.5	15.860	575	
		1800	182/4TC	00518ET3E184TC-W22	810	N1	109	1.25	6.45	89.5	15.860	208-230/460	
		1800	182/4TC	00518ET3H184TC-W22	810	N1	108	1.25	5.16	89.5	15.860	575	
		1200	213/5TC	00512ET3E215TC-W22	1,384	N1	177	1.25	6.83	89.5	19.517	208-230/460	
7.5	5.5	3600	213/5TC	00736ET3E213TC-W22	1,177	N1	160	1.25	8.76	89.5	19.517	208-230/460	
		3600	182/4TC	00736ET3H184TC-W22	1,112	N1	93	1.25	7.01	89.5	15.860	575	
		3600	213/5TC	00736ET3H213TC-W22	1,177	N1	158	1.25	7.01	89.5	19.517	575	
		1800	213/5TC	00718ET3E213TC-W22	1,141	N1	174	1.25	9.00	91.7	19.517	208-230/460	
		1800	213/5TC	00718ET3H213TC-W22	1,141	N1	167	1.25	7.20	91.7	19.517	575	
		1200	254/6TC	00712ET3E254TC-W22	2,134	N1	295	1.25	9.48	91.0	24.945	208-230/460	
		900	254/6TC	00709ET3E256TC-W22	3,726	N1	324	1.25	11.1	87.5	24.945	208-230/460	
10	7.5	3600	213/5TC	01036ET3E215TC-W22	1,383	N1	187	1.25	11.6	90.2	19.517	208-230/460	
		3600	213/5TC	01036ET3H215TC-W22	1,383	N1	185	1.25	9.28	90.2	19.517	575	
		1800	213/5TC	01018ET3E215TC-W22	1,325	N1	196	1.25	12.4	91.7	19.517	208-230/460	
		1800	213/5TC	01018ET3H215TC-W22	1,325	N1	197	1.25	9.92	91.7	19.517	575	
		1200	254/6TC	01012ET3E256TC-W22	2,465	N1	324	1.25	12.9	91.0	24.945	208-230/460	

Continued on next page

Note: Flanged motors on Cast Iron frame sizes 143/5 to 254/6 have non-NEMA BA dimension. Refer to mechanical section of this catalog for details.

GENERAL PURPOSE

TEFC – C-Flange – Foot Mount *continued*

HP	kW	RPM	NEMA Frame	Catalog Number	List Price	Mult. Symbol	Approx. Shipping Weight (lbs)	Service Factor	FL Amps @ High	FL. Eff (%)	"C" Dimension (in)	Voltage (V)	Notes
15	11	3600	213/5TC	01536ET3E215TC-W22	1,748	N1	199	1.25	17.0	91.0	19.517	208-230/460	
		3600	254/6TC	01536ET3E254TC-W22	1,893	N1	283	1.25	17.2	91.0	24.945	208-230/460	
		3600	254/6TC	01536ET3H254TC-W22	1,893	N1	282	1.25	13.8	91.0	24.945	575	
		1800	254/6TC	01518ET3E254TC-W22	1,917	N1	336	1.25	18.0	92.4	24.945	208-230/460	
		1800	254/6TC	01518ET3H254TC-W22	1,917	N1	330	1.25	14.4	92.4	24.945	575	
		1200	284/6TC	01512ET3E284TC-W22	3,388	N1	409	1.25	17.9	91.7	27.929	208-230/460	
		1200	284/6TC	01512ET3H284TC-W22	3,388	N1	408	1.25	14.3	91.7	27.929	575	
20	15	3600	254/6TC	02036ET3E256TC-W22	2,451	N1	318	1.25	23.2	91.0	24.945	208-230/460	
		3600	254/6TC	02036ET3H256TC-W22	2,451	N1	319	1.25	18.6	91.0	24.945	575	
		1800	254/6TC	02018ET3E256TC-W22	2,270	N1	367	1.25	24.1	93.0	24.945	208-230/460	
		1800	254/6TC	02018ET3H256TC-W22	2,270	N1	366	1.25	19.3	93.0	24.945	575	
		1200	284/6TC	02012ET3E286TC-W22	4,060	N1	456	1.25	24.2	91.7	27.929	208-230/460	
25	18.5	3600	284/6TSC	02536ET3E284TSC-W22	3,096	N1	407	1.25	28.5	91.7	26.557	208-230/460	
		3600	284/6TSC	02536ET3H284TSC-W22	3,096	N1	406	1.25	22.8	91.7	26.557	575	
		1800	284/6TC	02518ET3E284TC-W22	2,840	N1	439	1.25	29.5	93.6	27.929	208-230/460	
		1800	284/6TC	02518ET3H284TC-W22	2,840	N1	432	1.25	23.6	93.6	27.929	575	
30	22	3600	284/6TSC	03036ET3E286TSC-W22	3,659	N1	440	1.25	33.8	91.7	26.557	208-230/460	
		3600	284/6TSC	03036ET3H286TSC-W22	3,659	N1	437	1.25	27.0	91.7	26.557	575	
		1800	284/6TC	03018ET3E286TC-W22	3,321	N1	488	1.25	35.1	93.6	27.929	208-230/460	
		1800	284/6TC	03018ET3H286TC-W22	3,321	N1	487	1.25	28.1	93.6	27.929	575	
40	30	3600	324/6TSC	04036ET3E324TSC-W22	4,845	N1	589	1.25	45.8	92.4	29.616	208-230/460	
		3600	324/6TSC	04036ET3H324TSC-W22	4,845	N1	576	1.25	36.6	92.4	29.616	575	
		1800	324/6TC	04018ET3E324TC-W22	4,300	N1	630	1.25	48.2	94.1	31.116	208-230/460	
		1800	324/6TSC	04018ET3E324TSC-W22	4,300	N1	640	1.25	48.2	94.1	29.616	208-230/460	
		1800	324/6TC	04018ET3H324TC-W22	4,300	N1	630	1.25	38.6	94.1	31.116	575	
50	37	3600	324/6TSC	05036ET3E326TSC-W22	5,437	N1	622	1.25	56.1	93.0	29.616	208-230/460	
		1800	324/6TC	05018ET3E326TC-W22	5,221	N1	482	1.25	59.2	94.5	31.116	208-230/460	
		1800	324/6TSC	05018ET3E326TSC-W22	5,221	N1	479	1.25	59.2	94.5	29.616	208-230/460	
		1800	324/6TC	05018ET3H326TC-W22	5,221	N1	650	1.25	47.4	94.5	31.116	575	
		1200	364/5TC	05012ET3E365TC-W22	8,960	N1	1035	1.25	57.4	94.1	34.251	208-230/460	
60	45	3600	364/5TSC	06036ET3E364TSC-W22	7,994	N1	992	1.25	67.0	93.6	32.276	208-230/460	
		1800	364/5TC	06018ET3E364TC-W22	7,831	N1	1054	1.25	68.3	95.0	34.251	208-230/460	
		1800	364/5TC	06018ET3H364TC-W22	7,831	N1	1012	1.25	54.6	95.0	34.251	575	
75	55	3600	364/5TSC	07536ET3E365TSC-W22	9,533	N1	996	1.25	81.9	93.6	32.276	208-230/460	
		1800	364/5TC	07518ET3E365TC-W22	9,148	N1	1041	1.25	84.1	95.4	34.251	208-230/460	
		1800	364/5TC	07518ET3H365TC-W22	9,148	N1	1041	1.25	67.3	95.4	34.251	575	
100	75	1800	404/5TC	10018ET3E405TC-W22	12,179	N1	1328	1.25	111	95.4	39.730	208-230/460	
		1800	404/5TSC	10018ET3E405TSC-W22	12,179	N1	1300	1.25	111	95.4	36.732	208-230/460	
		1800	404/5TC	10018ET3H405TC-W22	12,179	N1	1328	1.25	88.8	95.4	39.730	575	

Continued on next page

Note: Flanged motors on Cast Iron frame sizes 143/5 to 254/6 have non-NEMA BA dimension. Refer to mechanical section of this catalog for details.

Refer to electrical and mechanical data sections for additional technical information. Please refer to back cover for description of "NOTES"

For detailed specifications, data sheets, drawings and performance curves visit http://catalog.wegelectric.com

Data subject to change without notice.

TEFC – C-Flange – Foot Mount *continued*

HP	kW	RPM	NEMA Frame	Catalog Number	List Price	Mult. Symbol	Approx. Shipping Weight (lbs)	Service Factor	FL Amps @ High	FL. Eff (%)	"C" Dimension (in)	Voltage (V)	Notes
125	90	1800	444/5TC	12518ET3G444TC-W22	16,218	N1	1754	1.15	139	95.4	44.950	460	
		1800	444/5TSC	12518ET3G444TSC-W22	16,218	N1	1840	1.15	139	95.4	41.200	460	
		1800	444/5TC	12518ET3H444TC-W22	16,218	N1	1754	1.15	111	95.4	44.950	575	
150	110	1800	444/5TC	15018ET3G445TC-W22	18,025	N1	1960	1.15	170	95.8	44.950	460	
200	150	1800	445/7TC	20018ET3G447TC-W22	21,704	N1	2368	1.15	230	96.2	48.701	460	
250	185	1800	445/7TC	25018EP3G447TC-W22	24,645	W1	2513	1.15	283	95.4	48.701	460	30
		1800	447/9TC	25018EP3G449TC-W22	26,065	W1	2513	1.15	283	95.4	56.338	460	30
		1800	445/7TSC	25018ET3G447TSC-W22	34,280	N1	2361	1.15	281	96.2	44.951	460	
		1800	445/7TSC	25018ET3Q447TSC-W22	27,322	N1	2414	1.15	281	96.2	48.701	460	
300	220	1800	447/9TC	30018EP3G449TC-W22	30,515	W1	3837	1.15	337	95.4	56.338	460	30
350	260	1800	447/9TC	35018EP3G449TC-W22	37,087	W1	4300	1.15	396	95.8	56.338	460	30

Note: Flanged motors on Cast Iron frame sizes 143/5 to 254/6 have non-NEMA BA dimension. Refer to mechanical section of this catalog for details.

GENERAL PURPOSE

TEFC – C-Flange – Footless

HP	kW	RPM	NEMA Frame	Catalog Number	List Price	Mult. Symbol	Approx. Shipping Weight (lbs)	Service Factor	FL Amps @ High	FL. Eff (%)	"C" Dimension (in)	Voltage (V)	Notes
1	0.75	3600	143TC	00136EP3ER143TC-W22	456	W1	42	1.25	1.48	75.5	13.055	208-230/460	15;30
		3600	143TC	00136ET3ER143TC-W22	577	N1	42	1.25	1.43	78.5	13.055	208-230/460	15
		1800	143TC	00118EP3ER143TC-W22	440	W1	48	1.25	1.44	82.5	13.055	208-230/460	15;30
		1800	143TC	00118ET3ER143TC-W22	572	N1	48	1.25	1.41	85.5	13.055	208-230/460	15
		1200	145TC	00112EP3ER145TC-W22	550	W1	50	1.25	1.63	80.0	14.055	208-230/460	15;30
		1200	145TC	00112ET3ER145TC-W22	655	N1	55	1.25	1.73	82.5	14.055	208-230/460	15
1.5	1.1	3600	143TC	00156EP3ER143TC-W22	458	W1	48	1.25	1.99	82.5	13.055	208-230/460	15;30
		3600	143TC	00156ET3ER143TC-W22	588	N1	48	1.25	1.91	84.0	13.055	208-230/460	15
		1800	145TC	00158EP3ER145TC-W22	445	W1	53	1.25	2.03	84.0	14.055	208-230/460	15;30
		1800	145TC	00158ET3ER145TC-W22	596	N1	54	1.25	2.02	86.5	14.055	208-230/460	15
		1200	182TC	00152EP3ER182TC-W22	666	W1	99	1.25	2.24	85.5	16.080	208-230/460	15;30
		1200	182TC	00152ET3ER182TC-W22	816	N1	99	1.25	2.39	87.5	16.080	208-230/460	15
2	1.5	3600	145TC	00236EP3ER145TC-W22	518	W1	55	1.25	2.64	84.0	14.055	208-230/460	15;30
		3600	145TC	00236ET3ER145TC-W22	638	N1	56	1.25	2.53	85.5	14.055	208-230/460	15
		1800	145TC	00218EP3ER145TC-W22	492	W1	55	1.25	2.73	84.0	14.055	208-230/460	15;30
		1800	145TC	00218ET3ER145TC-W22	659	N1	57	1.25	2.61	86.5	14.055	208-230/460	15
		1200	184TC	00212EP3ER184TC-W22	721	W1	90	1.25	2.98	86.5	17.080	208-230/460	15;30
		1200	184TC	00212ET3ER184TC-W22	883	N1	111	1.25	3.23	88.5	17.080	208-230/460	15
3	2.2	3600	145TC	00336EP3ER145TC-W22	570	W1	53	1.15	3.76	85.5	14.055	208-230/460	15;30
		3600	182TC	00336EP3ER182TC-W22	627	W1	96	1.25	3.67	85.5	16.080	208-230/460	15;30
		3600	182TC	00336ET3ER182TC-W22	826	N1	102	1.25	3.63	86.5	16.080	208-230/460	15
		1800	182TC	00318EP3ER182TC-W22	565	W1	95	1.25	3.85	87.5	16.080	208-230/460	15;30
		1800	182TC	00318ET3ER182TC-W22	721	N1	99	1.25	3.88	89.5	16.080	208-230/460	15
		1200	213TC	00312EP3ER213TC-W22	943	W1	140	1.25	4.15	87.5	19.241	208-230/460	15;30
		1200	213TC	00312ET3ER213TC-W22	1,203	N1	155	1.25	4.41	89.5	19.241	208-230/460	15
5	3.7	3600	184TC	00536EP3ER184TC-W22	758	W1	106	1.25	5.90	87.5	17.080	208-230/460	15;30
		3600	184TC	00536ET3ER184TC-W22	938	N1	114	1.25	5.90	88.5	17.080	208-230/460	15
		1800	184TC	00518EP3ER184TC-W22	662	W1	105	1.25	6.49	87.5	17.080	208-230/460	15;30
		1800	184TC	00518ET3ER184TC-W22	834	N1	110	1.25	6.45	89.5	17.080	208-230/460	15
		1200	215TC	00512EP3ER215TC-W22	1,195	W1	168	1.25	7.08	87.5	20.737	208-230/460	15;30
		1200	215TC	00512ET3ER215TC-W22	1,426	N1	174	1.25	6.83	89.5	20.737	208-230/460	15
7.5	5.5	3600	213TC	00736EP3ER213TC-W22	1,034	W1	149	1.25	8.86	88.5	19.241	208-230/460	15;30
		3600	213TC	00736ET3ER213TC-W22	1,212	N1	152	1.25	8.76	89.5	19.241	208-230/460	15
		1800	213TC	00718EP3ER213TC-W22	877	W1	150	1.25	9.31	89.5	19.241	208-230/460	15;30
		1800	213TC	00718ET3ER213TC-W22	1,175	N1	170	1.25	9.00	91.7	19.241	208-230/460	15
10	7.5	3600	215TC	01036EP3ER215TC-W22	1,195	W1	171	1.25	11.8	89.5	20.737	208-230/460	15;30
		3600	215TC	01036ET3ER215TC-W22	1,424	N1	179	1.25	11.6	90.2	20.737	208-230/460	15
		1800	215TC	01018EP3ER215TC-W22	1,034	W1	185	1.25	12.5	89.5	20.737	208-230/460	15;30
		1800	215TC	01018ET3ER215TC-W22	1,366	N1	193	1.25	12.4	91.7	20.737	208-230/460	15

Continued on next page

Refer to electrical and mechanical data sections for additional technical information. Please refer to back cover for description of "NOTES"

For detailed specifications, data sheets, drawings and performance curves visit http://catalog.wegelectric.com

Data subject to change without notice.

TEFC – C-Flange – Footless *continued*

HP	kW	RPM	NEMA Frame	Catalog Number	List Price	Mult. Symbol	Approx. Shipping Weight (lbs)	Service Factor	FL Amps @ High	FL. Eff (%)	"C" Dimension (in)	Voltage (V)	Notes
15	11	3600	254TC	01536EP3ER254TC-W22	1,707	W1	278	1.25	17.4	90.2	25.063	208-230/460	15;30
		3600	254TC	01536ET3ER254TC-W22	1,950	N1	278	1.25	17.2	91.0	25.063	208-230/460	15
		1800	254TC	01518EP3ER254TC-W22	1,564	W1	280	1.25	17.8	91.0	25.063	208-230/460	15;30
		1800	254TC	01518ET3ER254TC-W22	1,975	N1	332	1.25	18.0	92.4	25.063	208-230/460	15
20	15	3600	256TC	02036EP3ER256TC-W22	2,054	W1	306	1.25	23.7	90.2	26.795	208-230/460	15;30
		3600	256TC	02036ET3ER256TC-W22	2,525	N1	315	1.25	23.2	91.0	26.795	208-230/460	15
		1800	256TC	02018EP3ER256TC-W22	1,903	W1	317	1.25	24.3	91.0	26.795	208-230/460	15;30
		1800	256TC	02018EP3HR256TC-W22	1,903	W1	313	1.25	19.4	91.0	26.795	575	15;30
		1800	256TC	02018ET3ER256TC-W22	2,338	N1	362	1.25	24.1	93.0	26.795	208-230/460	15
25	18.5	3600	284TSC	02536EP3ER284TSC-W22	2,466	W1	383	1.25	29.0	91.0	27.305	208-230/460	15;30
		1800	284TC	02518EP3ER284TC-W22	2,294	W1	421	1.25	29.2	92.4	28.677	208-230/460	15;30
		1800	284TC	02518ET3ER284TC-W22	2,925	N1	436	1.25	29.5	93.6	28.677	208-230/460	15
30	22	3600	286TSC	03036EP3ER286TSC-W22	2,917	W1	413	1.25	33.7	91.0	28.801	208-230/460	15;30
		1800	286TC	03018EP3ER286TC-W22	2,785	W1	454	1.25	34.3	92.4	30.173	208-230/460	15;30
		1800	286TC	03018ET3ER286TC-W22	3,421	N1	484	1.25	35.1	93.6	30.173	208-230/460	15
		1200	326TSC	03012EP3ER326TSC-W22	4,887	W1	610	1.25	35.8	91.7	32.254	208-230/460	15;30
40	30	3600	324TSC	04036EP3ER324TSC-W22	4,252	W1	570	1.25	46.1	91.7	30.758	208-230/460	15;30
		1800	324TC	04018EP3ER324TC-W22	3,786	W1	528	1.25	47.6	93.0	32.258	208-230/460	15;30
		1800	324TC	04018ET3ER324TC-W22	4,429	N1	591	1.25	48.2	94.1	32.258	208-230/460	15
50	37	1800	326TC	05018EP3ER326TC-W22	4,208	W1	615	1.25	58.1	93.0	33.754	208-230/460	15;30
		1800	326TC	05018ET3ER326TC-W22	5,378	N1	474	1.25	59.2	94.5	33.754	208-230/460	15
75	55	1800	364/5TC	07518EP3ER365TC-W22	7,950	W1	1047	1.25	84.3	94.1	37.440	208-230/460	15;30

Refer to electrical and mechanical data sections for additional technical information. Please refer to back cover for description of “NOTES”

For detailed specifications, data sheets, drawings and performance curves visit http://catalog.wegelectric.com

Severe Duty Three-Phase Motors

IEEE 841 - THREE PHASE



TEFC - NEMA Premium

WEG's IEEE 841 motors are specially suited for Pulp & Paper mills, Steel mills, Petrochemical Plants and diverse demanding applications requiring severe duty long life motors.

WEG's W22 cast iron platform has an improved cooling system and solid feet for cooler operation and reduced vibration and noise extending the life of the motor.

Standard Features:

- Class F insulation (Impregnation Resin and magnet wire are class H)
- F1 Mounted (F2 convertible). Frames 447T and up can easily be F2 converted by simply rotating the terminal box adapter
- Stainless Steel Nameplate - Laser etched with high contrast background
- All frames with regreasable ball bearings
- Class I, Div. 2, Groups A, B, C & D – T3, Class II, Div 2, Groups F & G – T3C

Inverter Rated:
1000:1 for variable torque
20:1 for constant torque

** Frame 586/7 250HP and up 6:1 CT and 1000:1 VT*

Features that make a difference:

- 1.25 service factor up to 100 HP
- InproSeal Bearing Isolators both ends
- Bearing protection meets IP56
- Rubber lead separator between terminal box and frame
- Vibration: 0.04 inches per second or less
- Guaranteed foot flatness to within 0.005"
- Bearing life 50,000 hours (L-10)
- Epoxy Paint system exceeds 250hrs Salt Fog test
- Interior surfaces are epoxy coated
- Non-sparking fan
- NPT Threaded terminal box
- Seamless copper lead lugs
- Seamless Stainless Steel grease extension tubes
- Automatic grease relief fittings
- IEEE 841 Test Report in conduit box
- Suitable for IEEE45 USCG 259 – Marine Duty

ADDITIONAL TECHNICAL DATA

ELECTRICAL DATA: p. B-6

MECHANICAL DATA: p. C-2



IEEE 841

TEFC – Foot Mount

HP	kW	RPM	NEMA Frame	Catalog Number	List Price	Mult. Symbol	Approx. Shipping Weight (lbs)	Service Factor	FL Amps @ High	FL. Eff (%)	"C" Dimension (in)	Voltage (V)	Notes
		1800	143/5T	00118ST3HIE143T-W22	922	I1	43	1.25	1.13	85.5	13.346	575	
		1800	143/5T	00118ST3QIE143T-W22	922	I1	43	1.25	1.41	85.5	13.346	460	
1	0.75	1200	143/5T	00112ST3HIE145T-W22	1,062	I1	61	1.25	1.38	82.5	13.346	575	
		1200	143/5T	00112ST3QIE145T-W22	1,062	I1	60	1.25	1.73	82.5	13.346	460	
		900	182/4T	00109ST3QIE182T-W22	2,006	I1	98	1.25	2.30	78.5	15.860	460	
		3600	143/5T	00156ST3HIE143T-W22	981	I1	43	1.25	1.53	84.0	13.346	575	
		3600	143/5T	00156ST3QIE143T-W22	981	I1	56	1.25	1.91	84.0	13.346	460	
		1800	143/5T	00158ST3HIE145T-W22	981	I1	59	1.25	1.62	86.5	13.346	575	
1.5	1.1	1800	143/5T	00158ST3QIE145T-W22	981	I1	60	1.25	2.02	86.5	13.346	460	
		1200	182/4T	00152ST3HIE182T-W22	1,286	I1	74	1.25	1.91	87.5	15.860	575	
		1200	182/4T	00152ST3QIE182T-W22	1,286	I1	74	1.25	2.39	87.5	15.860	460	
		900	182/4T	00159ST3QIE184T-W22	2,016	I1	112	1.25	2.70	82.5	15.860	460	
		3600	143/5T	00236ST3HIE145T-W22	1,023	I1	56	1.25	2.02	85.5	13.346	575	
		3600	143/5T	00236ST3QIE145T-W22	1,023	I1	58	1.25	2.53	85.5	13.346	460	
		1800	143/5T	00218ST3HIE145T-W22	1,023	I1	61	1.25	2.09	86.5	13.346	575	
2	1.5	1800	143/5T	00218ST3QIE145T-W22	1,023	I1	61	1.25	2.61	86.5	13.346	460	
		1200	182/4T	00212ST3HIE184T-W22	1,363	I1	117	1.25	2.58	88.5	15.860	575	
		1200	182/4T	00212ST3QIE184T-W22	1,363	I1	117	1.25	3.23	88.5	15.860	460	
		900	213/5T	00209ST3QIE213T-W22	2,701	I1	154	1.25	3.39	85.5	19.517	460	
		3600	182/4T	00336ST3HIE182T-W22	1,267	I1	92	1.25	2.90	86.5	15.860	575	
		3600	182/4T	00336ST3QIE182T-W22	1,267	I1	108	1.25	3.63	86.5	15.860	460	
		1800	182/4T	00318ST3HIE182T-W22	1,224	I1	94	1.25	3.10	89.5	15.860	575	
3	2.2	1800	182/4T	00318ST3QIE182T-W22	1,224	I1	94	1.25	3.88	89.5	15.860	460	
		1200	213/5T	00312ST3HIE213T-W22	1,537	I1	126	1.25	3.53	89.5	19.517	575	
		1200	213/5T	00312ST3QIE213T-W22	1,537	I1	126	1.25	4.41	89.5	19.517	460	
		900	213/5T	00309ST3QIE215T-W22	2,883	I1	200	1.25	4.56	85.5	19.517	460	
		3600	182/4T	00536ST3HIE184T-W22	1,429	I1	117	1.25	4.72	88.5	15.860	575	
		3600	182/4T	00536ST3QIE184T-W22	1,429	I1	117	1.25	5.90	88.5	15.860	460	
		1800	182/4T	00518ST3HIE184T-W22	1,371	I1	112	1.25	5.16	89.5	15.860	575	
5	3.7	1800	182/4T	00518ST3QIE184T-W22	1,371	I1	113	1.25	6.45	89.5	15.860	460	
		1200	213/5T	00512ST3HIE215T-W22	1,901	I1	190	1.25	5.46	89.5	19.517	575	
		1200	213/5T	00512ST3QIE215T-W22	1,901	I1	190	1.25	6.83	89.5	19.517	460	
		900	254/6T	00509ST3QIE254T-W22	4,243	I1	278	1.25	7.58	87.5	24.945	460	
		3600	213/5T	00736ST3HIE213T-W22	1,751	I1	168	1.25	7.01	89.5	19.517	575	
		3600	213/5T	00736ST3QIE213T-W22	1,751	I1	144	1.25	8.76	89.5	19.517	460	
		1800	213/5T	00718ST3HIE213T-W22	1,646	I1	159	1.25	7.20	91.7	19.517	575	
7.5	5.5	1800	213/5T	00718ST3QIE213T-W22	1,646	I1	186	1.25	9.00	91.7	19.517	460	
		1200	254/6T	00712ST3HIE254T-W22	2,544	I1	282	1.25	7.58	91.0	24.945	575	
		1200	254/6T	00712ST3QIE254T-W22	2,544	I1	282	1.25	9.48	91.0	24.945	460	
		900	254/6T	00709ST3QIE256T-W22	5,040	I1	313	1.25	11.1	87.5	24.945	460	

Continued on next page

Refer to electrical and mechanical data sections for additional technical information. Please refer to back cover for description of "NOTES"

For detailed specifications, data sheets, drawings and performance curves visit http://catalog.wegelectric.com

TEFC – Foot Mount *continued*

HP	kW	RPM	NEMA Frame	Catalog Number	List Price	Mult. Symbol	Approx. Shipping Weight (lbs)	Service Factor	FL Amps @ High	FL. Eff (%)	"C" Dimension (in)	Voltage (V)	Notes
10	7.5	3600	213/5T	01036ST3HIE215T-W22	1,920	I1	190	1.25	9.28	90.2	19.517	575	
		3600	213/5T	01036ST3QIE215T-W22	1,920	I1	190	1.25	11.6	90.2	19.517	460	
		1800	213/5T	01018ST3HIE215T-W22	1,760	I1	196	1.25	9.92	91.7	19.517	575	
		1800	213/5T	01018ST3QIE215T-W22	1,760	I1	197	1.25	12.4	91.7	19.517	460	
		1200	254/6T	01012ST3HIE256T-W22	2,834	I1	308	1.25	10.3	91.0	24.945	575	
		1200	254/6T	01012ST3QIE256T-W22	2,834	I1	321	1.25	12.9	91.0	24.945	460	
		900	284/6T	01009ST3QIE284T-W22	5,936	I1	366	1.25	13.4	90.2	27.929	460	
15	11	3600	254/6T	01536ST3HIE254T-W22	2,428	I1	256	1.25	13.8	91.0	24.945	575	
		3600	254/6T	01536ST3QIE254T-W22	2,428	I1	256	1.25	17.2	91.0	24.945	460	
		1800	254/6T	01518ST3HIE254T-W22	2,257	I1	271	1.25	14.4	92.4	24.945	575	
		1800	254/6T	01518ST3QIE254T-W22	2,257	I1	271	1.25	18.0	92.4	24.945	460	
		1200	284/6T	01512ST3HIE284T-W22	4,203	I1	406	1.25	14.3	91.7	27.929	575	
		1200	284/6T	01512ST3QIE284T-W22	4,203	I1	407	1.25	17.9	91.7	27.929	460	
		900	284/6T	01509ST3QIE286T-W22	6,742	I1	434	1.25	19.4	90.2	27.929	460	
20	15	3600	254/6T	02036ST3HIE256T-W22	2,957	I1	315	1.25	18.6	91.0	24.945	575	
		3600	254/6T	02036ST3QIE256T-W22	2,957	I1	315	1.25	23.2	91.0	24.945	460	
		1800	254/6T	02018ST3HIE256T-W22	2,597	I1	364	1.25	19.3	93.0	24.945	575	
		1800	254/6T	02018ST3QIE256T-W22	2,597	I1	365	1.25	24.1	93.0	24.945	460	
		1200	284/6T	02012ST3HIE286T-W22	4,773	I1	453	1.25	19.4	91.7	27.929	575	
		1200	284/6T	02012ST3QIE286T-W22	4,773	I1	453	1.25	24.2	91.7	27.929	460	
		900	324/6T	02009ST3QIE324T-W22	8,269	I1	542	1.25	28.3	91.0	31.116	460	
25	18.5	3600	284/6TS	02536ST3HIE284TS-W22	3,368	I1	403	1.25	22.8	91.7	26.557	575	
		3600	284/6TS	02536ST3QIE284TS-W22	3,368	I1	400	1.25	28.5	91.7	26.557	460	
		1800	284/6T	02518ST3HIE284T-W22	2,926	I1	432	1.25	23.6	93.6	27.929	575	
		1800	284/6T	02518ST3QIE284T-W22	2,926	I1	430	1.25	29.5	93.6	27.929	460	
		1200	324/6T	02512ST3HIE324T-W22	5,211	I1	579	1.25	24.3	93.0	31.116	575	
		1200	324/6T	02512ST3QIE324T-W22	5,211	I1	580	1.25	30.4	93.0	31.116	460	
		900	324/6T	02509ST3QIE326T-W22	8,838	I1	601	1.25	35.9	91.0	31.116	460	
30	22	3600	284/6TS	03036ST3HIE286TS-W22	3,799	I1	419	1.25	27.0	91.7	26.557	575	
		3600	284/6TS	03036ST3QIE286TS-W22	3,799	I1	431	1.25	33.8	91.7	26.557	460	
		1800	284/6T	03018ST3HIE286T-W22	3,509	I1	483	1.25	28.1	93.6	27.929	575	
		1800	284/6T	03018ST3QIE286T-W22	3,509	I1	483	1.25	35.1	93.6	27.929	460	
		1200	324/6T	03012ST3HIE326T-W22	5,359	I1	629	1.25	28.6	93.0	31.116	575	
		1200	324/6T	03012ST3QIE326T-W22	5,359	I1	631	1.25	35.8	93.0	31.116	460	
		900	364/5T	03009ST3QIE364T-W22	13,149	I1	907	1.25	37.0	92.4	34.251	460	

Continued on next page

TEFC – Foot Mount *continued*

HP	kW	RPM	NEMA Frame	Catalog Number	List Price	Mult. Symbol	Approx. Shipping Weight (lbs)	Service Factor	FL Amps @ High	FL. Eff (%)	"C" Dimension (in)	Voltage (V)	Notes
40	30	3600	324/6TS	04036ST3HIE324TS-W22	5,306	I1	573	1.25	36.6	92.4	29.616	575	
		3600	324/6TS	04036ST3QIE324TS-W22	5,306	I1	569	1.25	45.8	92.4	29.616	460	
		1800	324/6T	04018ST3HIE324T-W22	4,692	I1	600	1.25	38.6	94.1	31.116	575	
		1800	324/6T	04018ST3QIE324T-W22	4,692	I1	602	1.25	48.2	94.1	31.116	460	
		1200	364/5T	04012ST3HIE364T-W22	8,636	I1	945	1.25	37.2	94.1	34.251	575	
		1200	364/5T	04012ST3QIE364T-W22	8,636	I1	947	1.25	46.5	94.1	34.251	460	
		900	364/5T	04009ST3QIE365T-W22	14,909	I1	985	1.25	50.0	92.4	34.251	460	
50	37	3600	324/6TS	05036ST3HIE326TS-W22	5,970	I1	610	1.25	44.9	93.0	29.616	575	
		3600	324/6TS	05036ST3QIE326TS-W22	5,970	I1	607	1.25	56.1	93.0	29.616	460	
		1800	324/6T	05018ST3HIE326T-W22	5,233	I1	642	1.25	47.4	94.5	31.116	575	
		1800	324/6T	05018ST3QIE326T-W22	5,233	I1	644	1.25	59.2	94.5	31.116	460	
		1200	364/5T	05012ST3HIE365T-W22	9,369	I1	989	1.25	45.9	94.1	34.251	575	
		1200	364/5T	05012ST3QIE365T-W22	9,369	I1	997	1.25	57.4	94.1	34.251	460	
		900	404/5T	05009ST3QIE404T-W22	19,331	I1	1211	1.25	60.0	93.0	39.730	460	
60	45	3600	364/5TS	06036ST3HIE364TS-W22	8,665	I1	947	1.25	53.6	93.6	32.276	575	
		3600	364/5TS	06036ST3QIE364TS-W22	8,665	I1	949	1.25	67.0	93.6	32.276	460	
		1800	364/5T	06018ST3HIE364T-W22	8,044	I1	1013	1.25	54.6	95.0	34.251	575	
		1800	364/5T	06018ST3QIE364T-W22	8,044	I1	1016	1.25	68.3	95.0	34.251	460	
		1200	404/5T	06012ST3HIE404T-W22	11,790	I1	1184	1.25	55.6	94.5	39.730	575	
		1200	404/5T	06012ST3QIE404T-W22	11,790	I1	1188	1.25	69.5	94.5	39.730	460	
		900	404/5T	06009ST3QIE405T-W22	22,579	I1	1269	1.25	73.0	93.0	39.730	460	
75	55	3600	364/5TS	07536ST3HIE365TS-W22	10,210	I1	972	1.25	65.5	93.6	32.276	575	
		3600	364/5TS	07536ST3QIE365TS-W22	10,210	I1	965	1.25	81.9	93.6	32.276	460	
		1800	364/5T	07518ST3HIE365T-W22	9,289	I1	1021	1.25	67.3	95.4	34.251	575	
		1800	364/5T	07518ST3QIE365T-W22	9,289	I1	1022	1.25	84.1	95.4	34.251	460	
		1200	404/5T	07512ST3HIE405T-W22	12,866	I1	1220	1.25	67.9	94.5	39.730	575	
		1200	404/5T	07512ST3QIE405T-W22	12,866	I1	1222	1.25	84.9	94.5	39.730	460	
		1200	404/5T	07512ST3QIERB405T-W2	12,866	I1	1230	1.25	84.9	94.5	39.730	460	14
		900	444/5T	07509ST3QIE444T-W22	23,457	I1	1649	1.25	93.0	93.6	44.950	460	
100	75	3600	404/5TS	10036ST3HIE405TS-W22	12,806	I1	1182	1.25	88.0	94.1	36.732	575	
		3600	404/5TS	10036ST3QIE405TS-W22	12,806	I1	1183	1.25	110	94.1	36.732	460	
		1800	404/5T	10018ST3HIE405T-W22	12,471	I1	1271	1.25	88.8	95.4	39.730	575	
		1800	404/5T	10018ST3QIE405T-W22	12,471	I1	1278	1.25	111	95.4	39.730	460	
		1800	404/5T	10018ST3QIERB405T-W2	12,471	I1	1286	1.25	111	95.4	39.730	460	14
		1200	444/5T	10012ST3HIE444T-W22	17,993	I1	1827	1.25	96.8	95.0	44.950	575	
		1200	444/5T	10012ST3QIE444T-W22	17,933	I1	1837	1.25	121	95.0	44.950	460	
		1200	444/5T	10012ST3QIERB444T-W2	17,933	I1	1847	1.25	121	95.0	44.950	460	14
		900	444/5T	10009ST3QIE445T-W22	24,681	I1	1824	1.25	127	94.1	44.950	460	
		900	444/5T	10009ST3QIERB445T-W2	24,681	I1	1763	1.25	127	94.1	44.950	460	14

Continued on next page

IEEE 841

TEFC – Foot Mount *continued*

HP	kW	RPM	NEMA Frame	Catalog Number	List Price	Mult. Symbol	Approx. Shipping Weight (lbs)	Service Factor	FL Amps @ High	FL. Eff (%)	"C" Dimension (in)	Voltage (V)	Notes
125	90	3600	444/5TS	12536ST3HIE444TS-W22	18,198	I1	1781	1.15	107	95.0	41.200	575	
		3600	444/5TS	12536ST3QIE444TS-W22	18,198	I1	1788	1.15	134	95.0	41.200	460	
		1800	444/5T	12518ST3HIE444T-W22	16,564	I1	1781	1.15	111	95.4	44.950	575	
		1800	444/5T	12518ST3QIE444T-W22	16,564	I1	1785	1.15	139	95.4	44.950	460	
		1800	444/5T	12518ST3QIERB444T-W2	16,564	I1	1802	1.15	139	95.4	44.950	460	14
		1200	444/5T	12512ST3HIE445T-W22	20,158	I1	1973	1.15	114	95.0	44.950	575	
		1200	444/5T	12512ST3QIE445T-W22	20,158	I1	1966	1.15	143	95.0	44.950	460	
		1200	444/5T	12512ST3QIERB445T-W2	20,158	I1	1984	1.15	143	95.0	44.950	460	14
		900	445/7T	12509ST3QIE447T-W22	29,733	I1	2212	1.15	151	94.5	48.701	460	
		900	445/7T	12509ST3QIERB447T-W2	29,733	I1	2248	1.15	151	94.5	48.701	460	14
150	110	3600	444/5TS	15036ST3HIE445TS-W22	21,433	I1	1892	1.15	129	95.0	41.200	575	
		3600	444/5TS	15036ST3QIE445TS-W22	21,433	I1	1893	1.15	161	95.0	41.200	460	
		1800	444/5T	15018ST3HIE445T-W22	18,587	I1	1868	1.15	136	95.8	44.950	575	
		1800	444/5T	15018ST3HIERB445T-W2	19,187	I1	1886	1.15	136	95.8	44.950	575	14
		1800	444/5T	15018ST3QIE445T-W22	18,587	I1	1873	1.15	170	95.8	44.950	460	
		1800	444/5T	15018ST3QIERB445T-W2	18,587	I1	1891	1.15	170	95.8	44.950	460	14
		1200	445/7T	15012ST3HIE447T-W22	23,181	I1	2463	1.15	141	95.8	48.701	575	
		1200	445/7T	15012ST3QIE447T-W22	23,181	I1	2460	1.15	176	95.8	48.701	460	
		1200	445/7T	15012ST3QIERB447T-W2	23,181	I1	2496	1.15	176	95.8	48.701	460	14
		900	445/7T	15009ST3QIE447T-W22	34,755	I1	2376	1.15	185	94.5	48.701	460	
		900	445/7T	15009ST3QIERB447T-W2	34,755	I1	2206	1.15	185	94.5	48.701	460	14
200	150	3600	445/7TS	20036ST3HIE447TS-W22	28,568	I1	2199	1.15	175	95.4	44.951	575	
		3600	445/7TS	20036ST3QIE447TS-W22	28,568	I1	2215	1.15	219	95.4	44.951	460	
		1800	445/7T	20018ST3HIE447T-W22	23,696	I1	2311	1.15	184	96.2	48.701	575	
		1800	445/7T	20018ST3QIE447T-W22	23,696	I1	2296	1.15	230	96.2	48.701	460	
		1800	445/7T	20018ST3QIERB447T-W2	23,696	I1	2063	1.15	230	96.2	48.701	460	14
		1200	447/9T	20012ST3HIE449T-W22	27,577	I1	2948	1.15	190	95.8	56.338	575	
		1200	447/9T	20012ST3HIERB449T-W2	27,557	I1	2936	1.15	190	95.8	56.338	575	14
		1200	447/9T	20012ST3QIE449T-W22	27,577	I1	2951	1.15	237	95.8	56.338	460	
		1200	447/9T	20012ST3QIERB449T-W2	27,557	I1	2969	1.15	237	95.8	56.338	460	14
		900	L447/9T	20009ST3QIE449T-W22	57,394	I1	3732	1.00	242	95.0	57.181	460	1
		900	L447/9T	20009ST3QIERB449T-W2	57,394	I1	3511	1.00	242	95.0	57.181	460	1;14
250	185	3600	447/9TS	25036ST3QIE449TS-W22	34,663	I1	2603	1.15	266	95.8	52.940	460	
		1800	447/9T	25018ST3QIE449T-W22	30,081	I1	2696	1.15	281	96.2	56.338	460	
		1800	447/9T	25018ST3QIERB449T-W2	30,081	I1	2683	1.15	281	96.2	56.338	460	14
		1200	447/9T	25012ST3QIE449T-W22	39,415	I1	3104	1.15	292	95.8	56.338	460	
		1200	447/9T	25012ST3QIERB449T-W2	39,415	I1	2702	1.15	292	95.8	56.338	460	14

Continued on next page

Refer to electrical and mechanical data sections for additional technical information. Please refer to back cover for description of "NOTES"

For detailed specifications, data sheets, drawings and performance curves visit http://catalog.wegelectric.com

Data subject to change without notice.

TEFC – Foot Mount *continued*

HP	kW	RPM	NEMA Frame	Catalog Number	List Price	Mult. Symbol	Approx. Shipping Weight (lbs)	Service Factor	FL Amps @ High	FL. Eff (%)	"C" Dimension (in)	Voltage (V)	Notes
300	220	1800	447/9T	30018ST3QIE449T-W22	36,810	I1	2831	1.15	330	96.2	56.338	460	
		1800	447/9T	30018ST3QIERB449T-W2	36,810	I1	2545	1.15	330	96.2	56.338	460	14
		1200	L447/9T	30012ST3QIE449T-W22	44,648	I1	3565	1.15	351	95.8	57.181	460	
		1200	L447/9T	30012ST3QIERB449T-W2	44,648	I1	3571	1.15	351	95.8	57.181	460	14
350	260	1800	L447/9T	35018ST3QIE449T-W22	44,105	I1	3580	1.15	394	96.2	56.338	460	
		1800	L447/9T	35018ST3QIERB449T-W2	44,105	I1	3580	1.15	394	96.2	56.338	460	14
		1200	L447/9T	35012ST3QIE449T-W22	52,634	I1	3756	1.00	415	95.8	57.181	460	1
		1200	L447/9T	35012ST3QIERB449T-W2	52,634	I1	3756	1.00	415	95.8	57.181	460	1;14
400	300	1800	L447/9T	40018ST3QIE449T-W22	48,396	I1	3467	1.15	455	96.2	57.181	460	
		1800	L447/9T	40018ST3QIERB449T-W2	48,396	I1	3467	1.15	455	96.2	57.181	460	14
450	330	1800	L447/9T	45018ST3QIE449T-W22	51,797	I1	3578	1.15	501	96.2	57.181	460	
		1800	L447/9T	45018ST3QIERB449T-W2	51,749	I1	3578	1.15	501	96.2	57.181	460	14

Refer to electrical and mechanical data sections for additional technical information. Please refer to back cover for description of “NOTES”

For detailed specifications, data sheets, drawings and performance curves visit http://catalog.wegelectric.com

Severe Duty - Three-Phase Motors

IEEE 841



TEFC – C-Flange – Foot Mount

HP	kW	RPM	NEMA Frame	Catalog Number	List Price	Mult. Symbol	Approx. Shipping Weight (lbs)	Service Factor	FL Amps @ High	FL. Eff (%)	"C" Dimension (in)	Voltage (V)	Notes
1	0.75	1800	143/5TC	00118ST3QIE143TC-W22	972	I1	52	1.25	1.41	85.5	13.346	460	
		1200	143/5TC	00112ST3QIE145TC-W22	1,112	I1	58	1.25	1.73	82.5	13.346	460	
1.5	1.1	3600	143/5TC	00156ST3QIE143TC-W22	1,031	I1	43	1.25	1.91	84.0	13.346	460	
		1800	143/5TC	00158ST3QIE145TC-W22	1,031	I1	58	1.25	2.02	86.5	13.346	460	
		1200	182/4TC	00152ST3QIE182TC-W22	1,351	I1	74	1.25	2.39	87.5	15.860	460	
		900	182/4TC	00159ST3QIE184TC-W22	2,081	I1	114	1.25	2.70	82.5	15.860	460	
2	1.5	3600	143/5TC	00236ST3QIE145TC-W22	1,073	I1	56	1.25	2.53	85.5	13.346	460	
		1800	143/5TC	00218ST3QIE145TC-W22	1,073	I1	59	1.25	2.61	86.5	13.346	460	
		1200	182/4TC	00212ST3QIE184TC-W22	1,428	I1	121	1.25	3.23	88.5	15.860	460	
		900	213/5TC	00209ST3QIE213TC-W22	2,781	I1	154	1.25	3.39	85.5	19.517	460	
3	2.2	3600	182/4TC	00336ST3QIE182TC-W22	1,332	I1	92	1.25	3.63	86.5	15.860	460	
		1800	182/4TC	00318ST3QIE182TC-W22	1,289	I1	94	1.25	3.88	89.5	15.860	460	
		1200	213/5TC	00312ST3QIE213TC-W22	1,617	I1	126	1.25	4.41	89.5	19.517	460	
		900	213/5TC	00309ST3QIE215TC-W22	2,963	I1	181	1.25	4.56	85.5	19.517	460	
5	3.7	3600	182/4TC	00536ST3QIE184TC-W22	1,494	I1	121	1.25	5.90	88.5	15.860	460	
		1800	182/4TC	00518ST3QIE184TC-W22	1,436	I1	116	1.25	6.45	89.5	15.860	460	
		1200	213/5TC	00512ST3QIE215TC-W22	1,981	I1	193	1.25	6.83	89.5	19.517	460	
		900	254/6TC	00509ST3QIE254TC-W22	4,363	I1	278	1.25	7.58	87.5	24.945	460	
7.5	5.5	3600	213/5TC	00736ST3QIE213TC-W22	1,831	I1	177	1.25	8.76	89.5	19.517	460	
	5.5	1800	213/5TC	00718ST3QIE213TC-W22	1,726	I1	159	1.25	9.00	91.7	19.517	460	
	5.5	1200	254/6TC	00712ST3QIE254TC-W22	2,664	I1	282	1.25	9.48	91.0	24.945	460	
	5.5	900	254/6TC	00709ST3QIE256TC-W22	5,160	I1	304	1.25	11.1	87.5	24.945	460	
10	7.5	3600	213/5TC	01036ST3QIE215TC-W22	2,000	I1	168	1.25	11.6	90.2	19.517	460	
	7.5	1800	213/5TC	01018ST3QIE215TC-W22	1,840	I1	200	1.25	12.4	91.7	19.517	460	
	7.5	1200	254/6TC	01012ST3QIE256TC-W22	2,954	I1	324	1.25	12.9	91.0	24.945	460	
	7.5	900	284/6TC	01009ST3QIE284TC-W22	6,136	I1	400	1.25	13.4	90.2	27.929	460	
15	11	3600	254/6TC	01536ST3QIE254TC-W22	2,548	I1	256	1.25	17.2	91.0	24.945	460	
	11	1800	254/6TC	01518ST3QIE254TC-W22	2,377	I1	344	1.25	18.0	92.4	24.945	460	
	11	1200	284/6TC	01512ST3QIE284TC-W22	4,403	I1	413	1.25	17.9	91.7	27.929	460	
	11	900	284/6TC	01509ST3QIE286TC-W22	6,942	I1	444	1.25	19.4	90.2	27.929	460	
20	15	3600	254/6TC	02036ST3QIE256TC-W22	3,077	I1	318	1.25	23.2	91.0	24.945	460	
	15	1800	254/6TC	02018ST3QIE256TC-W22	2,717	I1	368	1.25	24.1	93.0	24.945	460	
	15	1200	284/6TC	02012ST3QIE286TC-W22	4,973	I1	460	1.25	24.2	91.7	27.929	460	
	15	900	324/6TC	02009ST3QIE324TC-W22	8,494	I1	482	1.25	28.3	91.0	31.116	460	
25	18.5	3600	284/6TSC	02536ST3QIE284TSC-W2	3,568	I1	389	1.25	28.5	91.7	26.557	460	
	18.5	1800	284/6TC	02518ST3QIE284TC-W22	3,126	I1	434	1.25	29.5	93.6	27.929	460	
	18.5	1200	324/6TC	02512ST3QIE324TC-W22	5,436	I1	592	1.25	30.4	93.0	31.116	460	
	18.5	900	324/6TC	02509ST3QIE326TC-W22	9,063	I1	539	1.25	35.9	91.0	31.116	460	

Continued on next page

Note: Flanged motors on Cast Iron frame sizes 143/5 to 254/6 have non-NEMA BA dimension. Refer to mechanical section of this catalog for details.

TEFC – C-Flange – Foot Mount *continued*

HP	kW	RPM	NEMA Frame	Catalog Number	List Price	Mult. Symbol	Approx. Shipping Weight (lbs)	Service Factor	FL Amps @ High	FL. Eff (%)	"C" Dimension (in)	Voltage (V)	Notes
30	22	3600	284/6TSC	03036ST3QIE286TSC-W2	3,999	I1	419	1.25	33.8	91.7	26.557	460	
		1800	284/6TC	03018ST3QIE286TC-W22	3,709	I1	489	1.25	35.1	93.6	27.929	460	
		1200	324/6TC	03012ST3QIE326TC-W22	5,584	I1	643	1.25	35.8	93.0	31.116	460	
		900	364/5TC	03009ST3QIE364TC-W22	13,524	I1	917	1.25	37.0	92.4	34.251	460	
40	30	3600	324/6TSC	04036ST3QIE324TSC-W2	5,531	I1	577	1.25	45.8	94.1	29.616	460	
		1800	324/6TC	04018ST3QIE324TC-W22	4,917	I1	615	1.25	48.2	94.1	31.116	460	
		1200	364/5TC	04012ST3QIE364TC-W22	9,011	I1	947	1.25	46.5	94.1	34.251	460	
		900	364/5TC	04009ST3QIE365TC-W22	15,284	I1	1011	1.25	50.0	92.4	34.251	460	
50	37	3600	324/6TSC	05036ST3QIE326TSC-W2	6,195	I1	619	1.25	56.1	93.0	29.616	460	
		1800	324/6TC	05018ST3QIE326TC-W22	5,458	I1	653	1.25	59.2	94.5	31.116	460	
		1200	364/5TC	05012ST3QIE365TC-W22	9,744	I1	983	1.25	57.4	94.1	34.251	460	
		900	404/5TC	05009ST3QIE404TC-W22	19,856	I1	1132	1.25	60.0	93.0	39.730	460	
60	45	1200	404/5TC	06012ST3QIE404TC-W22	12,315	I1	1156	1.25	69.5	94.5	39.730	460	

Note: Flanged motors on Cast Iron frame sizes 143/5 to 254/6 have non-NEMA BA dimension. Refer to mechanical section of this catalog for details.

IEEE 841

TEFC – C-Flange – Footless

HP	kW	RPM	NEMA Frame	Catalog Number	List Price	Mult. Symbol	Approx. Shipping Weight (lbs)	Service Factor	FL Amps @ High	FL. Eff (%)	"C" Dimension (in)	Voltage (V)	Notes
1	0.75	1800	143/5TC	00118ST3QIER143TC-W2	1,000	I1	43	1.25	1.41	85.5	14.055	460	15
1.5	1.1	1800	143/5TC	00158ST3QIER145TC-W2	1,061	I1	54	1.25	2.02	86.5	14.055	460	15
2	1.5	1800	143/5TC	00218ST3QIER145TC-W2	1,104	I1	59	1.25	2.61	86.5	14.055	460	15
3	2.2	1800	182/4TC	00318ST3QIER182TC-W2	1,326	I1	108	1.25	3.88	89.5	17.080	460	15
5	3.7	1800	182/4TC	00518ST3QIER184TC-W2	1,478	I1	116	1.25	6.45	89.5	17.080	460	15
7.5	5.5	1800	213/5TC	00718ST3QIER213TC-W2	1,776	I1	175	1.25	9.00	91.7	20.737	460	15
10	7.5	1800	213/5TC	01018ST3QIER215TC-W2	1,893	I1	192	1.25	12.4	91.7	20.737	460	15

Refer to electrical and mechanical data sections for additional technical information. Please refer to back cover for description of “NOTES”

For detailed specifications, data sheets, drawings and performance curves visit http://catalog.wegelectric.com

Data subject to change without notice.

W22 IEEE841 Severe Duty Motors

1-500HP

The WEG W22 product is the latest generation of Severe Duty Cast Iron frame industrial motors designed to meet the demands of Reliability, Efficiency, and Total Cost of Ownership todays' customers demand, and have come to expect from WEG.

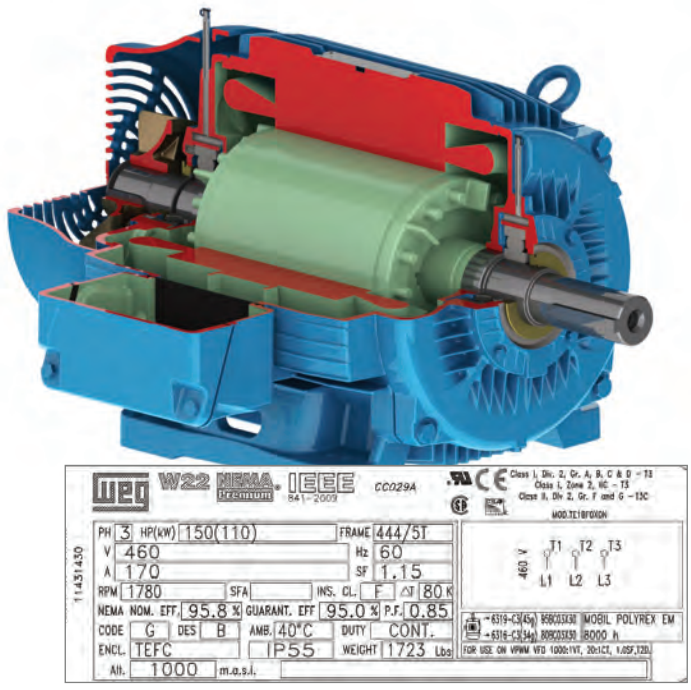





Standard Features

- Heavy Duty FC200 Cast Iron Frame Brackets, Conduit Box and Fan Cover
- Motor rated IP55
- InproSeal VBXX seals rated IP56 on both bearings
- C4 coated Silicon core steel withstands >500C burnout temps for superior repairability
- Dual drilled mounting Feet for increased flexibility
- Foot flatness of <.005" and paint free feet aid mounting and alignment
- Regreasable ball bearings with WEG Positive Pressure Lubrication System (PPLS) including Cast Iron bearing caps, Seamless Stainless Steel grease inlet extensions, and Auto grease relief
- Forged shouldered eyebolts for safe handling (180T and above)
- Stainless Steel automatic condensate Drains in both endshields
- 4-Bolts Conduit Box and Cover with Neoprene gaskets for sure seal
- VFD Rated Class F insulation system per NEMA MG1 Part 31 utilizing Class H Varnish and Magnet wire
- Stainless Steel Nameplate includes Weight, Division 2, and lubrication information
- IEEE 841 Test report with Vibration data included in the conduit box

Features That Make a Difference:

- Low Vibration design .04 in/sec (1/2 IEEE 841 Spec)
- C4 Coated Silicon Core Steel
- Highest Service Factor in the industry 1.25SF on <125HP
- Bearings meet IP56 with InproSeal VBXX on both ends
- Epoxy Paint system exceeds 250Hrs Salt spay per ASTMB117

Custom features and options available as factory modifications as well as many stock modifications for quick delivery

Please contact your authorized WEG distributor or go to **weg.net/us** for further information or additional specifications. **1-800-ASK-4WEG**

www.weg.net/us

Severe Duty – Three-Phase Motors
Crusher Duty



TEFC - NEMA Premium

Designed for the most demanding crusher applications. These motors are designed for horizontal and vertical mounting and have exceptional high starting and breakdown torques.

WEG's W22 cast iron platform has an improved cooling system and solid feet for cooler operation and reduced vibration and noise, extending the life of the motor.

Standard Features:

- 50/60 Hz rated (380V on Nameplate - 400/415 available)
- Rated 50Hz at same Horsepower up to 250HP 1.0 Service Factor for 2, 4 & 6 Pole motors
- Class F insulation (Impregnation Resin and Magnet wire are class H)
- NEMA design A. All ratings exceed NEMA design C torque
- F1 Mounted (F2 convertible). Frames 447T and up can easily be F2 converted by simply rotating the terminal box adapter
- Stainless Steel Nameplate - Laser etched with high contrast background
- Gasketed conduit box
- Class I, Div. 2, Groups A, B, C & D – T3, Class II, Div 2, Groups F & G – T3C

Features that make a difference:

- Oversized Roller bearings
- Versatile starting methods - capable of wye/delta, across the line and part winding (12 leads) start.
- NPT Threaded terminal box

Inverter Rated:
1000:1 for variable torque
20:1 for constant torque

ADDITIONAL TECHNICAL DATA
ELECTRICAL DATA: p. B-6
MECHANICAL DATA: p. C-63

Severe Duty – Three-Phase Motors

Crusher Duty



TEFC - High Efficiency

Standard Features:

- 50/60 Hz rated (380V on Nameplate - 400/415 available)
- Class F insulation (Impregnation Resin and magnet Wire are class H)
- F1 Mounted (F2 convertible). Frames 447T and up can easily be F2 converted by simply rotating the terminal box adapter
- Stainless Steel Nameplate - Laser etched with high contrast background
- Gasketed conduit box
- Class I, Div. 2, Groups A, B, C & D – T3, Class II, Div 2, Groups F & G – T3C

Features that make a difference:

- Oversized Roller bearings
- Versatile starting methods - capable of wye/delta, across the line and part winding (12 leads) start
- Largest diameter shafts ("Z" Frames) for the highest load ratings in the industry
- Labyrinth seal on both ends ("Z" Frames)
- NPT Threaded terminal box

Inverter Rated:
1000:1 for variable torque
12:1 for constant torque

** E586/7HP 250HP and up 4:1 CT and 1000:1 VT*

ADDITIONAL TECHNICAL DATA

ELECTRICAL DATA: **p. B-32**

MECHANICAL DATA: **p. C-63**

Severe Duty - Three-Phase Motors



CRUSHER DUTY

TEFC – Foot Mount

HP	kW	RPM	NEMA Frame	Catalog Number	List Price	Mult. Symbol	Approx. Shipping Weight (lbs)	Service Factor	FL Amps @ High	FL. Eff (%)	"C" Dimension (in)	Voltage (V)	Notes
50	37	900	404/5T	05009EP3EKD404T-W22	8,310	K1	1236	1.15	61.0	91.7	39.730	208-230/460	14;30
60	45	1200	404/5T	06012ET3ERB404T-W22	10,497	N1	1214	1.25	69.5	94.5	39.730	208-230/460	14
		900	404/5T	06009EP3EKD405T-W22	9,397	K1	1326	1.15	74.2	91.7	39.730	208-230/460	14;30
75	55	1200	404/5T	07512ET3ERB405T-W22	12,058	N1	888	1.25	84.9	94.5	39.730	208-230/460	14
		1200	404/5T	07512ET3GRB405T-W22	12,058	N1	1210	1.25	84.9	94.5	39.730	460	14
		900	444/5T	07509EP3GKD444T-W22	13,733	K1	1786	1.15	92.8	93.0	44.950	460	14;30
100	75	1800	404/5T	10018ET3ERB405T-W22	11,689	N1	1298	1.25	111	95.4	39.730	208-230/460	14
		1800	404/5T	10018ET3GRB405T-W22	11,689	N1	1286	1.25	111	95.4	39.730	460	14
		1800	404/5T	10018ET3HRB405T-W22	11,689	N1	1295	1.25	88.8	95.4	39.730	575	14
		1200	444/5T	10012ET3ERB444T-W22	15,631	N1	1903	1.25	121	95.0	44.950	208-230/460	14
		1200	444/5T	10012ET3GRB444T-W22	15,631	N1	1901	1.25	121	95.0	44.950	460	14
		900	444/5T	10009EP3GKD445T-W22	16,009	K1	2138	1.15	127	93.0	44.950	460	14;30
125	90	1800	444/5T	12518ET3ERB444T-W22	14,748	N1	1862	1.15	139	95.4	44.950	208-230/460	14
		1800	444/5T	12518ET3GRB444T-W22	14,748	N1	1866	1.15	139	95.4	44.950	460	14
		1200	444/5T	12512ET3ERB445T-W22	17,947	N1	2041	1.15	143	95.0	44.950	208-230/460	14
		1200	444/5T	12512ET3GRB445T-W22	17,947	N1	2038	1.15	143	95.0	44.950	460	14
		900	445/7T	12509EP3GKD447T-W22	22,808	K1	2203	1.15	151	93.6	48.701	460	14;30
150	110	1800	444/5T	15018ET3GRB445T-W22	17,420	N1	1935	1.15	170	95.8	44.950	460	14
		1800	444/5T	15018ET3HRB445T-W22	17,420	N1	1952	1.15	136	95.8	44.950	575	14
		1200	445/7T	15012ET3GRB447T-W22	20,639	N1	2502	1.15	176	95.8	48.701	460	14
		900	445/7T	15009EP3GKD447T-W22	25,429	K1	2419	1.15	184	93.6	48.701	460	14;30
200	150	1800	445/7T	20018ET3GRB447T-W22	21,098	N1	2346	1.15	230	96.2	48.701	460	14
		1800	445/7T	20018ET3HRB447T-W22	21,098	N1	1850	1.15	184	96.2	48.701	575	14
		1200	504/5Z	20012EP3GKD505Z-W22	20,945	K1	2751	1.15	236	95.0	55.090	460	14;18;30
		1200	504/5Z	20012EP3HKD505Z-W22	20,945	K1	2711	1.15	189	95.0	55.090	575	14;18;30
		1200	445/7T	20012ET3GRB447T-W22	25,133	N1	2722	1.15	237	95.8	48.701	460	14
		1200	447/9T	20012ET3GRB449T-W22	25,255	N1	2954	1.15	237	95.8	56.338	460	14
		900	447/9T	20009EP3GKD449-W22	34,001	K1	3023	1.15	262	94.5	56.338	460	14;30
250	185	1800	445/7T	25018EP3GKD447T-W22	21,399	K1	2494	1.15	285	95.8	48.701	460	14;30
		1800	504/5Z	25018EP3GKD505Z-W22	22,190	K1	2702	1.15	285	95.8	55.090	460	14;18;30
		1200	447/9T	25012EP3GKD449-W22	28,784	K1	3070	1.15	300	95.4	56.338	460	14;30
		1200	586/7Z	25012EP3GKD580Z-W22	36,377	K1	3892	1.15	304	95.4	61.902	460	14;18;30
		900	586/7	25009EP3GKD586/7-W22	45,434	K1	4273	1.15	308	95.4	61.902	460	14;30
300	220	1800	447/9T	30018EP3GKD449-W22	29,957	K1	3000	1.15	335	95.8	56.338	460	14;30
		1800	586/7Z	30018EP3GKD580Z-W22	34,713	K1	3623	1.15	335	95.8	61.902	460	14;18;30
		1800	586/7Z	30018EP3HKD580Z-W22	34,713	K1	3605	1.15	268	95.8	61.902	575	14;18;30
		1200	447/9T	30012EP3GKD449-W22	37,574	K1	3694	1.15	362	95.4	56.338	460	14;30
		1200	586/7Z	30012EP3GKD580Z-W22	42,320	K1	4113	1.15	362	95.4	61.902	460	14;18;30
		1200	586/7	30012EP3GKD586/7-W22	42,320	K1	4104	1.15	362	95.4	61.902	460	14;30
		900	586/7	30009EP3GKD586/7-W22	56,876	K1	4747	1.15	366	95.4	61.902	460	14;30

Continued on next page

Refer to electrical and mechanical data sections for additional technical information. Please refer to back cover for description of "NOTES"

For detailed specifications, data sheets, drawings and performance curves visit http://catalog.wegelectric.com

Data subject to change without notice.

TEFC – Foot Mount *continued*

HP	kW	RPM	NEMA Frame	Catalog Number	List Price	Mult. Symbol	Approx. Shipping Weight (lbs)	Service Factor	FL Amps @ High	FL. Eff (%)	"C" Dimension (in)	Voltage (V)	Notes
350	260	1800	447/9T	35018EP3GKD449-W22	33,207	K1	3176	1.15	396	95.8	56.338	460	14;30
		1800	586/7Z	35018EP3GKD580Z-W22	37,249	K1	3806	1.15	401	95.8	61.902	460	14;18;30
		1200	586/7Z	35012EP3GKD580Z-W22	46,284	K1	4367	1.15	428	95.4	61.902	460	14;18;30
		900	586/7	35009EP3GKD586/7-W22	59,819	K1	4986	1.15	429	95.0	61.902	460	14;30
400	300	1800	586/7Z	40018EP3GKD580Z-W22	43,272	K1	3999	1.15	452	95.8	61.902	460	14;18;30
		1800	586/7Z	40018EP3HKD580Z-W22	43,272	K1	3980	1.15	362	95.8	61.902	575	14;18;30
		1200	586/7Z	40012EP3GKD580Z-W22	50,817	K1	4611	1.15	485	95.4	61.902	460	14;18;30
		1200	586/7	40012EP3GKD586/7-W22	50,817	K1	4671	1.15	485	95.4	61.902	460	14;30
		1200	586/7Z	40012EP3HKD580Z-W22	50,817	K1	4594	1.15	388	95.4	61.902	575	14;18;30
450	330	1800	586/7Z	45018EP3GKD580Z-W22	46,410	K1	4204	1.15	497	95.8	61.902	460	14;18;30
		1800	586/7	45018EP3GKD586/7-W22	46,410	K1	4513	1.15	497	95.8	61.902	460	14;30
		1200	586/7Z	45012EP3GKD580Z-W22	54,954	K1	4770	1.15	540	95.4	61.902	460	14;18;30
500	370	1800	586/7Z	50018EP3GKD580Z-W22	47,713	K1	4490	1.15	557	95.8	61.902	460	14;18;30
		1200	586/7Z	50012EP3GKD580Z-W22	58,329	K1	4912	1.15	598	95.8	61.902	460	14;18;19;30

Refer to electrical and mechanical data sections for additional technical information. Please refer to back cover for description of “NOTES”

For detailed specifications, data sheets, drawings and performance curves visit http://catalog.wegelectric.com

Severe Duty – Three-Phase Motors

VECTOR DUTY



TENV - Foot Mount - Double C-Face

Designed specifically for inverter operation for applications requiring 1000:1 constant torque turndown ratio.

Standard Features:

- Class F insulation (Impregnation Resin and Magnet wire are class H)
- NEMA design B.
- F1 Mounted (F2 convertible).
- Stainless Steel Nameplate - Laser etched with High contrast background
- Gasketed conduit box
- Class I, Div. 2, Groups A, B, C & D – T3, Class II, Div 2, Groups F & G – T3C

Features that make a difference:

- Constant torque operation from 0 to base speed (1000:1) on PWM Vector Drive
- Constant Horsepower operation up to 150% base speed
- Ready for encoder mount
- With thermostats (1 per phase)
- Special nameplate data for easy drive set-up
- Ready for C-face brake, limited to 10 lb-ft braking torque

Inverter Rated:
1000 : 1 for constant torque

HP	kW	RPM	NEMA Frame	Catalog Number	List Price	Mult. Symbol	Approx. Shipping Weight (lbs)	Service Factor	FL Amps @ High	FL. Eff (%)	"C" Dimension (in)	Voltage (V)	Notes
1	0.75	1800	143TC	00118NT3FVD143TC-W22	697	D1	51	1.00	1.37	85.5	13.693	230/460	17
1.5	1.1	1800	145TC	00158NT3FVD145TC-W22	705	D1	57	1.00	1.98	86.5	14.678	230/460	17
2	1.5	1800	145TC	00218NT3FVD145TC-W22	928	D1	62	1.00	2.58	86.5	14.678	230/460	17
3	2.2	1800	182TC	00318NT3FVD182TC-W22	1,150	D1	100	1.00	3.91	89.5	15.569	230/460	17
5	3.7	1800	184TC	00518NT3FVD184TC-W22	1,373	D1	102	1.00	6.98	89.5	16.569	230/460	17
7.5	5.5	1800	213TC	00718NT3FVD213TC-W22	1,803	D1	173	1.00	9.08	91.7	18.541	230/460	17
10	7.5	1800	215TC	01018NT3FVD215TC-W22	2,157	D1	180	1.00	12.3	91.7	20.041	230/460	17
15	11	1800	254TC	01518NT3FVD254TC-W22	2,567	D1	316	1.00	19.3	92.4	23.837	230/460	17
20	3	1800	256TC	02018NT3FVD256TC-W22	3,747	D1	322	1.0	26.0	93.0	25.569	230/460	17

Note: Flanged motors on Cast Iron frame sizes 143/5 to 254/6 have non-NEMA BA dimension. Refer to mechanical section of this catalog for details.

ADDITIONAL TECHNICAL DATA

ELECTRICAL DATA: p. B-79
MECHANICAL DATA: p. C-58

Severe Duty – Three-Phase Motors

IEC TRU-METRIC™ - Three Phase

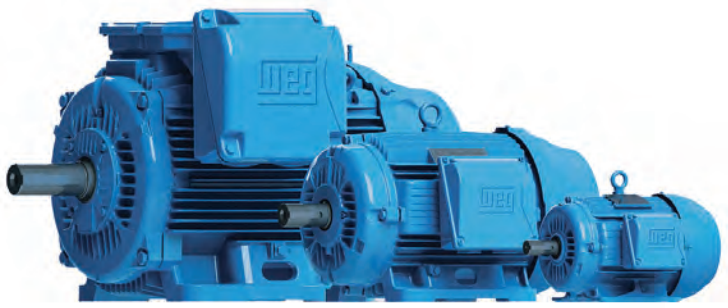

TEFC

This line is designed and built according to European IEC34 and IEC79 standards.

Standard Features:

- 60 Hz (1.15 service factor) and 50 Hz (1.0 service factor)
- Class F insulation (Impregnation Resin and Magnet wire are class H)
- F2 mounted as standard (F1 convertible)
- Stainless Steel Nameplate - Laser etched with high contrast background
- Regreasable ball bearings (Frames 160 and up)
- Gasketed conduit box
- Class I, Div. 2, Groups A, B, C & D – T3, Class II, Div 2, Groups F & G – T3C (Cast Iron Frames only)
- Suitable for WYE/Delta Start (W and Y voltage code motors)

Features that make a difference:

- 1.25 service factor for 60 Hz operation (IE3)
- 1.15 service factor for 60 Hz operation (IE2)
- Optimized ventilation system for cooler operation and reduced noise levels
- Solid base for reduced vibration levels (Cast Iron Frames)
- Frames 225 and up can easily be F1 (B3L) converted by simply rotating the terminal box adapter or F3 by removing it
- Terminal blocks

Inverter Rated (IE3):
1000:1 for variable torque
12:1 for constant torque

** IE2 is 10:1 VT and 4:1 CT*

ADDITIONAL TECHNICAL DATA

ELECTRICAL DATA: p. B-34 to B-48
MECHANICAL DATA: p. C-20 to C-24

Severe Duty - Three-Phase Motors

IEC TRU-METRIC™



TEFC – Foot Mount IE3 & IE2

HP	kW	RPM	NEMA Frame	Catalog Number	List Price	Mult. Symbol	Approx. Shipping Weight (lbs)	Service Factor	FL Amps @ High	FL. Eff (%)	"C" Dimension (in)	Voltage (V)	Notes
5.5	4	900/750	160M	00409EP3Y160M-W22	1,693	T1	256	1.15	8.29	86.5	23.543	460//380-415/660-690	7;11
7.5	5.5	1000//1200	160M	00512ET3E160M-W22	1,760	T1	276	1.25	9.48	91.0	23.543	230/460//190/380	7
		1000//1200	160M	00512ET3Y160M-W22	1,760	T1	289	1.25	9.48	91.0	23.543	460//380-415/660-690	7
		900/750	160M	00509EP3Y160M-W22	1,951	T1	287	1.15	12.5	84.9	23.543	460//380-415/660-690	7;11
10	7.5	1000//1200	160M	00712ET3E160M-W22	2,306	T1	291	1.25	13.1	91.0	23.543	230/460//190/380	7
		1000//1200	160M	00712ET3Y160M-W22	2,306	T1	297	1.25	13.1	91.0	23.543	460//380-415/660-690	7
		900/750	160L	00709EP3Y160L-W22	2,412	T1	328	1.15	15.0	88.5	25.276	460//380-415/660-690	7;11
15	11	3600/3000	160M	01136ET3Y160M-W22	2,102	T1	300	1.25	17.9	91.7	23.543	460//380-415/660-690	7
		1800//1500	160M	01118ET3Y160M-W22	1,726	T1	332	1.25	18.2	92.4	23.543	460//380-415/660-690	7
		1000//1200	160L	01112ET3Y160L-W22	3,160	T1	346	1.25	18.8	91.7	25.276	460//380-415/660-690	7
		900/750	180L	01109EP3Y180L-W22	3,505	T1	413	1.15	18.8	89.5	27.638	460//380-415/660-690	7;11
		900/750	200L	01509EP3Y200L-W22	4,485	T1	528	1.15	28.0	91.0	30.197	460//380-415/660-690	7;11
20	15	3600/3000	160M	01536ET3Y160M-W22	2,413	T1	316	1.25	24.4	91.7	23.543	460//380-415/660-690	7
		1800//1500	160L	01518ET3Y160L-W22	2,118	T1	379	1.25	25.0	93.0	25.276	460//380-415/660-690	7
		1000//1200	180L	01512ET3Y180L-W22	3,884	T1	459	1.25	24.7	91.7	27.638	460//380-415/660-690	7
25	18.5	3600/3000	160L	01836ET3Y160L-W22	2,925	T1	349	1.25	29.9	92.4	25.276	460//380-415/660-690	7
		1800//1500	180M	01818ET3Y180M-W22	2,689	T1	444	1.25	30.6	93.6	26.142	460//380-415/660-690	7
		1000//1200	200L	01812ET3Y200L-W22	4,886	T1	556	1.25	30.8	93.0	30.197	460//380-415/660-690	7
		900/750	225S/M	01809EP3Y225S/M-W22	5,270	T1	861	1.15	31.0	92.4	34.882	460//380-415/660-690	7;11
30	22	3600/3000	180M	02236ET3Y180M-W22	3,492	T1	435	1.25	34.7	92.4	26.142	460//380-415/660-690	7
		1800//1500	180L	02218ET3Y180L-W22	3,225	T1	484	1.25	36.0	93.6	27.638	460//380-415/660-690	7
		1000//1200	200L	02212ET3Y200L-W22	4,924	T1	602	1.25	37.1	93.0	30.197	460//380-415/660-690	7
		900/750	225S/M	02209EP3Y225S/M-W22	6,702	T1	903	1.15	36.9	92.4	34.882	460//380-415/660-690	7;11
40	30	3600/3000	200L	03036ET3Y200L-W22	4,877	T1	565	1.25	47.1	93.0	30.197	460//380-415/660-690	7
		1800//1500	200L	03018ET3Y200L-W22	4,312	T1	603	1.25	49.4	94.1	30.197	460//380-415/660-690	7
		1000//1200	225S/M	03012ET3Y225S/M-W22	7,689	T1	1035	1.25	47.6	94.1	34.882	460//380-415/660-690	7
		900/750	250S/M	03009EP3Y250S/M-W22	7,909	T1	1075	1.15	49.1	92.4	37.992	460//380-415/660-690	7;11
50	37	3600/3000	200L	03736ET3Y200L-W22	5,487	T1	577	1.25	57.7	93.6	30.197	460//380-415/660-690	7
		1800//1500	225S/M	03718ET3Y225S/M-W22	6,984	T1	1027	1.25	58.5	94.5	34.882	460//380-415/660-690	7
		1000//1200	250S/M	03712ET3Y250S/M-W22	9,947	T1	1242	1.25	58.8	94.1	37.992	460//380-415/660-690	7
		900/750	280S/M	03709EP3Y280S/M-W22	10,492	T1	1529	1.15	62.8	93.6	42.165	460//380-415/660-690	7;11
60	45	3600/3000	225S/M	04536ET3Y225S/M-W22	7,961	T1	1038	1.25	66.7	94.1	33.701	460//380-415/660-690	7
		1800//1500	225S/M	04518ET3Y225S/M-W22	7,391	T1	1058	1.25	69.9	95.0	34.882	460//380-415/660-690	7
		1000//1200	280S/M	04512ET3Y280S/M-W22	11,023	T1	1653	1.25	74.7	94.5	42.165	460//380-415/660-690	7
		900	280S/M	04509EP3Y280S/M-W22	11,442	T1	1619	1.15	77.0	94.1	42.165	460//380-415/660-690	7;11

Continued on next page

Refer to electrical and mechanical data sections for additional technical information. Please refer to back cover for description of "NOTES"

For detailed specifications, data sheets, drawings and performance curves visit http://catalog.wegelectric.com

Data subject to change without notice.

TEFC – Foot Mount IE3 & IE2 *continued*

HP	kW	RPM	NEMA Frame	Catalog Number	List Price	Mult. Symbol	Approx. Shipping Weight (lbs)	Service Factor	FL Amps @ High	FL. Eff (%)	"C" Dimension (in)	Voltage (V)	Notes
75	55	3600/3000	250S/M	05536ET3Y250S/M-W22	9,847	T1	1246	1.25	80.3	94.5	37.992	460//380-415/660-690	7
		1800//1500	250S/M	05518ET3Y250S/M-W22	8,961	T1	1241	1.25	85.1	95.4	37.992	460//380-415/660-690	7
		1000//1200	280S/M	05512ET3Y280S/M-W22	13,622	T1	1752	1.25	90.2	94.5	42.165	460//380-415/660-690	7
		900/750	315S/M	05509EP3Y315S/M-W22	13,731	T1	2030	1.15	91.7	94.1	50.157	460//380-415/660-690	7;11
100	75	3600/3000	280S/M	07536ET3Y280S/M-W22	12,472	T1	1902	1.25	111	94.5	42.165	460//380-415/660-690	7
		1800//1500	280S/M	07518ET3Y280S/M-W22	12,353	T1	1896	1.25	116	95.4	42.165	460//380-415/660-690	7
		1000//1200	315S/M	07512ET3Y315S/M-W22	16,479	T1	2489	1.25	122	95.0	50.157	460//380-415/660-690	7
		900/750	315S/M	07509EP3Y315S/M-W22	16,649	T1	2251	1.15	123	94.5	50.157	460//380-415/660-690	7;11
125	90	3600/3000	280S/M	09036ET3Y280S/M-W22	16,720	T1	1989	1.25	132	95.0	42.165	460//380-415/660-690	7
		1800//1500	280S/M	09018ET3Y280S/M-W22	15,220	T1	2008	1.25	139	95.4	42.165	460//380-415/660-690	7
		1000//1200	315S/M	09012ET3Y315S/M-W22	19,448	T1	2689	1.25	146	95.4	50.157	460//380-415/660-690	7
		900/750	315S/M	09009EP3Y315S/M-W22	19,007	T1	2403	1.15	148	94.5	50.157	460//380-415/660-690	7;11
150	110	3600/3000	315S/M	11036ET3Y315S/M-W22	21,018	T1	2463	1.25	163	95.0	48.976	460//380-415/660-690	7
		1800//1500	280S/M	11018ET3Y280S/M-W22	17,078	T1	2260	1.25	170	95.8	42.165	460//380-415/660-690	7
		1000//1200	315S/M	11012ET3Y315S/M-W22	21,300	T1	2818	1.25	178	95.8	50.157	460//380-415/660-690	7
		900/750	315L	11009EP3Y315L-W22	24,920	T1	2925	1.15	182	95.0	54.449	460//380-415/660-690	7;11
175	132	3600/3000	315S/M	13236ET3Y315S/M-W22	23,180	T1	2667	1.25	193	95.4	48.976	460//380-415/660-690	7
		1800//1500	315S/M	13218ET3Y315S/M-W22	19,732	T1	2803	1.25	203	96.2	50.157	460//380-415/660-690	7
		1000//1200	315S/M	13212ET3Y315S/M-W22	19,079	T1	3019	1.25	214	95.8	50.157	460//380-415/660-690	7
		900/750	315L	13209EP3Y315L-W22	30,078	T1	3163	1.15	217	95.4	54.449	460//380-415/660-690	7;11
200	150	3600/3000	315S/M	15036ET3Y315S/M-W22	26,249	T1	2758	1.25	219	95.4	48.976	460//380-415/660-690	7
		1800//1500	315S/M	15018ET3Y315S/M-W22	21,772	T1	2864	1.25	228	96.2	50.157	460//380-415/660-690	7
		1000//1200	315L	15012ET3Y315L-W22	22,444	T1	3315	1.25	240	95.8	54.449	460//380-415/660-690	7
250	185	3600/3000	315S/M	18536EP3Y315S/M-W22	23,687	T1	2624	1.15	270	95.4	53.268	460//380-415/660-690	7;11
		1800//1500	315S/M	18518EP3Y315S/M-W22	23,435	T1	2738	1.15	283	95.4	54.449	460//380-415/660-690	7;11
		1000//1200	315L	18512EP3Y315L-W22	38,854	T1	3176	1.15	293	95.4	54.449	460//380-415/660-690	7;11
300	220	3600/3000	315L	22036EP3Y315L-W22	39,475	T1	2890	1.15	322	95.4	53.268	460//380-415/660-690	7;11
		1800//1500	315L	22018EP3Y315L-W22	32,352	T1	3121	1.15	333	95.4	54.449	460//380-415/660-690	7;11
		1000//1200	315L	22012EP3Y315L-W22	41,020	T1	3756	1.15	349	95.4	54.449	460//380-415/660-690	7;11
350	260	1800//1500	355M/L	26018EP3Y355M/L-W22	39,072	T1	3525	1.15	401	95.8	58.346	460//380-415/660-690	7;11
		1000//1200	355M/L	26012EP3Y355M/L-W22	47,322	T1	4229	1.15	422	95.4	58.346	460//380-415/660-690	7;11
400	300	3600/3000	315L	30036EP3Y315L-W22	42,828	T1	3362	1.15	434	95.4	54.449	460//380-415/660-690	7;11
		1800//1500	355M/L	30018EP3Y355M/L-W22	53,832	T1	3614	1.15	462	95.8	58.346	460//380-415/660-690	7;11
450	330	1800//1500	355M/L	33018EP3Y355M/L-W22	57,640	T1	4185	1.15	503	95.8	58.46	460//380-415/660-690	7;11

Refer to electrical and mechanical data sections for additional technical information. Please refer to back cover for description of "NOTES"

For detailed specifications, data sheets, drawings and performance curves visit http://catalog.wegelectric.com

Fractional Explosion Proof Motors

Features:

- Class F insulation
- 1.0 service factor
- Foot mount motors with and without C-flange
- Class I - Group C & D and Class II - Groups E, F & G – T3C
- Thermally Protected
- Long leads for remote wiring
- Aluminum endshields



c UL US LISTED

Features that make a difference:

- 50°C ambient temperature rating
- Three-Phase motors also rated for 50Hz
- Unassembled aluminum conduit box included

ADDITIONAL TECHNICAL DATA

ELECTRICAL DATA:	Contact WEG
MECHANICAL DATA:	Contact WEG

Please contact your authorized WEG distributor or go to **weg.net/us** for further information or additional specifications. **1-800-ASK-4WEG**

www.weg.net/us

Data subject to change without notice.

Explosion Proof Motor Starters

ESWX Series

WEG Explosion Proof Motor Starters are the perfect compliment for motor control in Hazardous and Industrial environments. The expanded product line now enables WEG to pursue a wide range of industries in the most severe applications.





Hazardous Areas:

– Class I, Div I, Groups C & D --- Explosive Gas or Vapor

– Class II, Div I, Groups E, F, G --- Explosive Dust

Features

- NEMA 7/9 rated housing
- Corrosion resistant, copper free cast aluminum alloy body
- Watertight gasket for NEMA 4 applications
- Durable cast on lugs for secure mounting
- Hinged door for easier installation (except ESWX-M16)
- Optional Breather / Drain
- All series include:
  – Thermal overload protection Class 10
  – Phase loss sensitivity protection
  – Ambient temperature compensation -4ºF +140ºF
  – Snap-in accessories
  – Suitable for group installation

Please contact your authorized WEG distributor or go to **weg.net/us** for further information or additional specifications. **1-800-ASK-4WEG**

www.weg.net/us

SINGLE-PHASE

Foot Mount

HP	kW	RPM	NEMA Frame	Catalog Number	List Price	Mult. Symbol	Approx. Shipping Weight (lbs)	Service Factor	FL Amps @ High	FL. Eff (%)	"C" Dimension (in)	Voltage (V)	Notes
0.33	0.25	3600	56	.3336XS1B56	612	XF	23	1.00	2.60	59.7	11.790	115/208-230	9
		1800	56	.3318XS1B56	670	XF	25	1.00	3.00	60.4	11.790	115/208-230	9;17
0.5	0.37	3600	56	.5036XS1B56	636	XF	26	1.00	3.40	66.7	12.040	115/208-230	9
		1800	56	.5018XS1B56	739	XF	27	1.00	4.20	62.4	12.290	115/208-230	9
0.75	0.55	3600	56	.7536XS1B56	717	XF	30	1.00	4.30	74.5	12.540	115/208-230	9
		1800	56	.7518XS1B56	868	XF	34	1.00	4.52	70.8	13.040	115/208-230	9
1	0.75	3600	56	00136XS1B56	774	XF	32	1.00	5.30	76.5	13.040	115/208-230	9
		1800	56	00118XS1B56	988	XF	37	1.00	6.30	74.8	13.790	115/208-230	9
1.5	1.1	3600	56	00156XS1C56	1,121	XF	38	1.00	7.80	80.0	14.040	208-230	9
		1800	56H	00158XS1C56H	1,324	XF	48	1.00	7.80	80.0	15.420	208-230	9
2	1.5	3600	56H	00236XS1C56H	1,408	XF	43	1.00	9.80	81.1	14.540	208-230	9

Refer to electrical and mechanical data sections for additional technical information. Please refer to back cover for description of “NOTES”

For detailed specifications, data sheets, drawings and performance curves visit http://catalog.wegelectric.com

Data subject to change without notice.

C-Flange – Foot Mount

HP	kW	RPM	NEMA Frame	Catalog Number	List Price	Mult. Symbol	Approx. Shipping Weight (lbs)	Service Factor	FL Amps @ High	FL. Eff (%)	"C" Dimension (in)	Voltage (V)	Notes
0.33	0.25	3600	56C	.3336XS1B56C	737	XF	23	1.00	2.60	59.7	11.790	115/208-230	9
		1800	56C	.3318XS1B56C	816	XF	25	1.00	3.00	60.4	11.790	115/208-230	9;17
0.5	0.37	3600	56C	.5036XS1B56C	717	XF	26	1.00	3.40	66.7	12.040	115/208-230	9
		1800	56C	.5018XS1B56C	817	XF	27	1.00	4.20	62.4	12.290	115/208-230	9
0.75	0.55	3600	56C	.7536XS1B56C	773	XF	30	1.00	4.30	74.5	12.540	115/208-230	9
		1800	56C	.7518XS1B56C	912	XF	34	1.00	4.52	70.8	13.040	115/208-230	9
1	0.75	3600	56C	00136XS1B56C	814	XF	32	1.00	5.30	76.5	13.040	115/208-230	9
		1800	56C	00118XS1B56C	1,036	XF	37	1.00	6.30	74.8	13.790	115/208-230	9
1.5	1.1	3600	56C	00156XS1C56C	1,274	XF	38	1.00	7.80	80.0	14.040	208-230	9
		1800	56HC	00158XS1C56HC	1,420	XF	48	1.00	7.80	80.0	15.420	208-230	9
2	1.5	3600	56HC	00236XS1C56HC	1,457	XF	43	1.00	9.80	81.1	14.540	208-230	9

Refer to electrical and mechanical data sections for additional technical information. Please refer to back cover for description of “NOTES”

For detailed specifications, data sheets, drawings and performance curves visit http://catalog.wegelectric.com

Explosion Proof Motors

NEMA PREMIUM EFFICIENCY MOTORS



WEG Explosion Proof motors are suitable for applications requiring UL or CSA certification for hazardous locations.

Standard Features:

- Class F insulation (Impregnation Resin and Magnet wire are class H)
- F1 Mounted (Cast Iron frames are F2 convertible)
- Stainless Steel Nameplate - Laser etched with high contrast background
- All frames with regreasable ball bearings (Frames 364T and up)
- CSA Approved - File LR50962
  - Class I, Division 1, Groups C & D Temperature Code T3C
  - Class II, Division 1, Groups F & G Temperature Code T3C
- UL Listed - File E87848
  - Class I, Division 1, Groups C & D
  - Class II, Division 1, Groups F & G
  - Frame (143T-326T) Temperature Code T4
  - Frame (364T and up) Temperature Code T3C

Features that make a difference:

- NPT threaded terminal box
- Non-sparking fan
- Thermostats
- IP55 rated enclosure
- VFD Service 20:1 CT; 1000:1 VT (cCSAus and excludes frames 449T & 586/7)

CSA files are NRTL cCSAus listings

Inverter Rated:
CSA US (Certificate 1629892)
Constant Torque

20:1 for frames 143T to 447T - Class I & II
4:1 for frame 449T - Class I only
20:1 for frame 504/5 - Class I & II
2:1 for frame 586/7 - Class I & II

Variable Torque

1000:1 for all frames excluding 449T - Class I & II
1000:1 for 449T - Class I only

ADDITIONAL TECHNICAL DATA

ELECTRICAL DATA: **p. B-28**
MECHANICAL DATA: **p. C-18**

Explosion Proof Motors

HIGH EFFICIENCY MOTORS



WEG Explosion Proof motors are suitable for applications requiring UL or CSA certification for hazardous locations.

Standard Features:

- Class F insulation (Impregnation Resin and Magnet wire are class H)
- F1 Mounted (Cast Iron frames are F2 convertible)
- Stainless Steel Nameplate - Laser etched with high contrast background
- All frames with regreasable ball bearings (Frames 364T and up)
- CSA Approved - File LR50962
  - Class I, Division 1, Groups C & D Temperature Code T3C
  - Class II, Division 1, Groups F & G Temperature Code T3C
- UL Listed - File E87848
  - Class I, Division 1, Groups C & D
  - Class II, Division 1, Groups F & G
  - Frame (143T-326T) Temperature Code T4
  - Frame (364T and up) Temperature Code T3C

Features that make a difference:

- NPT threaded terminal box
- Non-sparking fan
- Thermostats
- IP55 rated enclosure
- VFD Service 12:1 CT; 1000:1 VT (cCSAus and excludes frames 449T & 586/7)

CSA files are NRTL cCSAus listings

Inverter Rated:
CSA US (Certificate 1629892)
Constant Torque

12:1 for frames 143T to 447T) - Class I & II
4:1 for frame 449T - Class I only
12:1 for frame 504/5 - Class I & II
2:1 for frame 586/7 - Class I & II

Variable Torque

1000:1 for all frames excluding 449T - Class I & II
1000:1 for 449T - Class I only

ADDITIONAL TECHNICAL DATA

ELECTRICAL DATA: p. B-26
MECHANICAL DATA: p. C-18

Explosion Proof Motors

THREE-PHASE





Foot Mount

HP	kW	RPM	NEMA Frame	Catalog Number	List Price	Mult. Symbol	Approx. Shipping Weight (lbs)	Service Factor	FL Amps @ High	FL. Eff (%)	"C" Dimension (in)	Voltage (V)	Notes
0.33	0.25	3600	56	.3336XS3E56	650	XF	21	1.00	0.60	69.8	10.520	208-230/460	9;17
		1800	56	.3318XS3E56	713	XF	23	1.00	0.60	76.7	10.520	208-230/460	9;17
0.5	0.37	3600	56	.5036XS3E56	782	XF	24	1.00	0.90	73.1	11.790	208-230/460	9
		1800	56	.5018XS3E56	741	XF	27	1.00	0.85	79.1	11.920	208-230/460	9
0.75	0.55	3600	56	.7536XS3E56	815	XF	25	1.00	1.20	77.1	11.790	208-230/460	9
		1800	56	.7518XS3E56	817	XF	28	1.00	1.40	78.6	12.290	208-230/460	9
1	0.75	3600	56	00136XS3E56	858	XF	27	1.00	1.60	79.0	11.920	208-230/460	9
		3600	143T	00136XT3E143T	886	XT	67	1.15	1.41	81.5	12.760	208-230/460	
		1800	56	00118XS3E56	895	XF	31	1.00	1.60	82.2	12.540	208-230/460	9
		1800	143T	00118XT3E143T	901	XT	68	1.15	1.43	85.5	12.760	208-230/460	
		1800	143T	00118XT3H143T	901	XT	67	1.15	1.14	85.5	12.760	575	
		1200	145T	00112XT3E145T	988	XT	75	1.15	1.54	82.5	13.752	208-230/460	
		1200	145T	00112XT3H145T	988	XT	75	1.15	1.23	82.5	13.752	575	
		900	182T	00109XP3E182T	1,512	X1	116	1.15	2.31	74.0	14.862	208-230/460	30
		900	182T	00109XT3E182T	1,974	XT	116	1.15	2.30	78.5	14.862	208-230/460	
1.5	1.1	3600	56	00156XS3E56	1,143	XF	30	1.00	2.10	81.7	12.290	208-230/460	9
		3600	143T	00156XT3E143T	916	XT	67	1.15	2.05	84.0	12.760	208-230/460	
		3600	143T	00156XT3H143T	916	XT	65	1.15	1.64	84.0	12.760	575	
		1800	56H	00158XS3E56H	974	XF	41	1.00	2.10	86.0	14.040	208-230/460	9
		1800	145T	00158XT3E145T	963	XT	75	1.15	2.05	86.5	13.752	208-230/460	
		1800	145T	00158XT3H145T	963	XT	75	1.15	1.64	86.5	13.752	575	
		1200	182T	00152XT3E182T	1,105	XT	119	1.15	2.32	87.5	14.862	208-230/460	
		1200	182T	00152XT3H182T	1,105	XT	126	1.15	1.86	87.5	14.862	575	
		900	184T	00159XP3E184T	1,548	X1	128	1.15	2.71	77.0	15.862	208-230/460	30
		900	184T	00159XT3E184T	1,901	XT	132	1.15	2.70	82.5	15.862	208-230/460	
2	1.5	3600	56H	00236XS3E56H	1,171	XF	35	1.00	2.70	83.7	14.040	208-230/460	9
		3600	145T	00236XT3E145T	935	XT	77	1.15	2.69	85.5	13.752	208-230/460	
		3600	145T	00236XT3H145T	935	XT	78	1.15	2.15	85.5	13.752	575	
		1800	56H	00218XS3E56H	1,090	XF	48	1.00	2.70	86.9	15.040	208-230/460	9
		1800	145T	00218XT3E145T	995	XT	75	1.15	2.72	86.5	13.752	208-230/460	
		1800	145T	00218XT3H145T	995	XT	75	1.15	2.18	86.5	13.752	575	
		1200	184T	00212XT3E184T	1,158	XT	135	1.15	3.13	88.5	15.862	208-230/460	
		1200	184T	00212XT3H184T	1,158	XT	134	1.15	2.50	88.5	15.862	575	
		900	213T	00209XP3E213T	1,953	X1	174	1.15	3.46	82.5	17.952	208-230/460	30
		900	213T	00209XT3E213T	2,439	XT	182	1.15	3.45	84.0	17.952	208-230/460	

Continued on next page

Refer to electrical and mechanical data sections for additional technical information. Please refer to back cover for description of "NOTES"

For detailed specifications, data sheets, drawings and performance curves visit http://catalog.wegelectric.com

Data subject to change without notice.

Foot Mount *continued*

HP	kW	RPM	NEMA Frame	Catalog Number	List Price	Mult. Symbol	Approx. Shipping Weight (lbs)	Service Factor	FL Amps @ High	FL. Eff (%)	"C" Dimension (in)	Voltage (V)	Notes
3	2.2	3600	56H	00336XS3E56H	1,386	XF	46	1.00	3.80	86.7	14.420	208-230/460	9
		3600	182T	00336XT3E182T	1,192	XT	120	1.15	3.80	86.5	14.862	208-230/460	
		3600	182T	00336XT3H182T	1,192	XT	120	1.15	3.04	86.5	14.862	575	
		1800	182T	00318XT3E182T	1,208	XT	119	1.15	3.91	89.5	14.862	208-230/460	
		1800	182T	00318XT3H182T	1,208	XT	119	1.15	3.13	89.5	14.862	575	
		1200	213T	00312XT3E213T	1,792	XT	197	1.15	4.41	89.5	17.952	208-230/460	
		1200	213T	00312XT3H213T	1,792	XT	198	1.15	3.53	89.5	17.952	575	
		900	215T	00309XP3E215T	2,134	X1	212	1.15	4.39	84.0	19.450	208-230/460	30
		900	215T	00309XT3E215T	2,805	XT	218	1.15	4.44	84.0	19.450	208-230/460	
5	3.7	3600	184T	00536XT3E184T	1,255	XT	133	1.15	6.10	88.5	15.862	208-230/460	
		3600	184T	00536XT3H184T	1,255	XT	133	1.15	4.88	88.5	15.862	575	
		1800	184T	00518XT3E184T	1,220	XT	136	1.15	6.57	89.5	15.862	208-230/460	
		1800	184T	00518XT3H184T	1,220	XT	136	1.15	5.26	89.5	15.862	575	
		1200	215T	00512XT3E215T	1,899	XT	223	1.15	6.83	89.5	19.450	208-230/460	
		1200	215T	00512XT3H215T	1,899	XT	223	1.15	5.46	89.5	19.450	575	
		900	254T	00509XP3E254T	3,237	X1	321	1.15	7.99	85.5	23.175	208-230/460	30
		900	254T	00509XT3E254T	3,953	XT	348	1.15	7.93	87.5	23.175	208-230/460	
7.5	5.5	3600	213T	00736XT3E213T	1,646	XT	193	1.15	8.97	89.5	17.952	208-230/460	
		3600	213T	00736XT3H213T	1,646	XT	191	1.15	7.18	89.5	17.952	575	
		1800	213T	00718XT3E213T	1,897	XT	188	1.15	9.41	91.7	17.952	208-230/460	
		1800	213T	00718XT3H213T	1,897	XT	188	1.15	7.53	91.7	17.952	575	
		1200	254T	00712XT3E254T	2,483	XT	348	1.15	9.73	91.0	23.175	208-230/460	
		1200	254T	00712XT3H254T	2,483	XT	348	1.15	7.78	91.0	23.175	575	
		900	256T	00709XP3E256T	3,675	X1	349	1.15	11.2	86.5	24.923	208-230/460	30
		900	256T	00709XT3E256T	4,707	XT	382	1.15	11.6	87.5	24.923	208-230/460	
10	7.5	3600	215T	01036XT3E215T	1,727	XT	217	1.15	12.0	90.2	19.450	208-230/460	
		3600	215T	01036XT3H215T	1,727	XT	216	1.15	9.60	90.2	19.450	575	
		1800	215T	01018XT3E215T	1,997	XT	219	1.15	12.7	91.7	19.450	208-230/460	
		1800	215T	01018XT3H215T	1,997	XT	223	1.15	10.2	91.7	19.450	575	
		1200	256T	01012XT3E256T	2,900	XT	382	1.15	13.3	91.0	24.923	208-230/460	
		1200	256T	01012XT3H256T	2,900	XT	381	1.15	10.6	91.0	24.923	575	
		900	284T	01009XP3E284T	4,631	X1	488	1.15	13.6	88.5	26.407	208-230/460	30
		900	284T	01009XT3E284T	5,668	XT	496	1.15	13.3	91.0	26.407	208-230/460	

Continued on next page

Refer to electrical and mechanical data sections for additional technical information. Please refer to back cover for description of “NOTES”

For detailed specifications, data sheets, drawings and performance curves visit http://catalog.wegelectric.com

Foot Mount *continued*

HP	kW	RPM	NEMA Frame	Catalog Number	List Price	Mult. Symbol	Approx. Shipping Weight (lbs)	Service Factor	FL Amps @ High	FL. Eff (%)	"C" Dimension (in)	Voltage (V)	Notes
15	11	3600	254T	01536XT3E254T	2,387	XT	347	1.15	16.9	91.7	23.175	208-230/460	
		3600	254T	01536XT3H254T	2,387	XT	346	1.15	13.5	91.7	23.175	575	
		1800	254T	01518XT3E254T	2,653	XT	307	1.15	18.4	92.4	23.175	208-230/460	
		1800	254T	01518XT3H254T	2,653	XT	307	1.15	14.7	92.4	23.175	575	
		1200	284T	01512XT3E284T	4,048	XT	496	1.15	17.5	91.7	26.407	208-230/460	
		1200	284T	01512XT3H284T	4,048	XT	496	1.15	14.0	91.7	26.407	575	
		900	286T	01509XP3E286T	5,677	X1	530	1.15	19.0	88.5	27.905	208-230/460	30
		900	286T	01509XT3E286T	7,102	XT	535	1.15	19.0	91.0	27.905	208-230/460	
20	15	3600	256T	02036XT3E256T	3,083	XT	375	1.15	23.1	91.7	24.923	208-230/460	
		3600	256T	02036XT3H256T	3,083	XT	374	1.15	18.5	91.7	24.923	575	
		1800	256T	02018XT3E256T	3,008	XT	388	1.15	25.0	93.0	24.923	208-230/460	
		1800	256T	02018XT3H256T	3,008	XT	388	1.15	20.0	93.0	24.923	575	
		1200	286T	02012XT3E286T	4,444	XT	538	1.15	24.2	91.7	27.905	208-230/460	
		1200	286T	02012XT3H286T	4,444	XT	509	1.15	19.4	91.7	27.905	575	
		900	324T	02009XP3E324T	6,984	X1	631	1.15	28.0	89.5	29.602	208-230/460	30
		900	324T	02009XT3E324T	8,390	XT	653	1.15	27.5	92.4	29.602	208-230/460	
25	18.5	3600	284TS	02536XT3E284TS	4,188	XT	490	1.15	28.6	92.4	25.033	208-230/460	
		3600	284TS	02536XT3H284TS	4,188	XT	489	1.15	22.9	92.4	25.033	575	
		1800	284T	02518XT3E284T	3,886	XT	498	1.15	29.9	93.6	26.407	208-230/460	
		1800	284T	02518XT3H284T	3,886	XT	497	1.15	23.9	93.6	26.407	575	
		1200	324T	02512XT3E324T	5,375	XT	675	1.15	30.4	93.0	29.602	208-230/460	
		1200	324T	02512XT3H324T	5,375	XT	676	1.15	24.3	93.0	29.602	575	
		900	326T	02509XP3E326T	8,513	X1	691	1.15	35.5	89.5	31.106	208-230/460	30
		900	326T	02509XT3E326T	10,512	XT	720	1.15	35.4	92.4	31.106	208-230/460	
30	22	3600	286TS	03036XT3E286TS	4,262	XT	538	1.15	33.7	93.0	26.531	208-230/460	
		3600	286TS	03036XT3H286TS	4,262	XT	540	1.15	27.0	93.0	26.531	575	
		1800	286T	03018XT3E286T	4,296	XT	537	1.15	36.0	93.6	27.905	208-230/460	
		1800	286T	03018XT3H286T	4,296	XT	536	1.15	28.8	93.6	27.905	575	
		1200	326T	03012XT3E326T	6,196	XT	738	1.15	36.7	93.0	31.106	208-230/460	
		1200	326T	03012XT3H326T	6,196	XT	703	1.15	29.4	93.0	31.106	575	
		900	364/5T	03009XP3E364T	11,677	X1	1002	1.15	38.4	91.0	33.701	208-230/460	30
		900	364/5T	03009XT3E364T	15,071	XT	1011	1.15	38.5	93.0	33.701	208-230/460	
40	30	3600	324TS	04036XT3E324TS	5,583	XT	662	1.15	45.8	93.6	28.102	208-230/460	
		3600	324TS	04036XT3H324TS	5,583	XT	662	1.15	36.6	93.6	28.102	575	
		1800	324T	04018XT3E324T	5,380	XT	699	1.15	48.2	94.1	29.602	208-230/460	
		1800	324T	04018XT3H324T	5,380	XT	698	1.15	38.6	94.1	29.602	575	
		1200	364/5T	04012XT3E364T	10,576	XT	1082	1.15	47.1	94.1	33.701	208-230/460	
		1200	364/5T	04012XT3H364T	10,576	XT	1080	1.15	37.7	94.1	33.701	575	
		900	364/5T	04009XP3E365T	12,326	X1	1094	1.15	52.4	91.0	33.701	208-230/460	30
		900	364/5T	04009XT3E365T	15,505	XT	1110	1.15	52.2	93.6	33.701	208-230/460	

Continued on next page

Refer to electrical and mechanical data sections for additional technical information. Please refer to back cover for description of "NOTES"

For detailed specifications, data sheets, drawings and performance curves visit http://catalog.wegelectric.com

Data subject to change without notice.

Foot Mount *continued*

HP	kW	RPM	NEMA Frame	Catalog Number	List Price	Mult. Symbol	Approx. Shipping Weight (lbs)	Service Factor	FL Amps @ High	FL. Eff (%)	"C" Dimension (in)	Voltage (V)	Notes
50	37	3600	326TS	05036XT3E326TS	6,582	XT	723	1.15	55.5	94.1	29.606	208-230/460	
		3600	326TS	05036XT3H326TS	6,582	XT	723	1.15	44.4	94.1	29.606	575	
		1800	326T	05018XT3E326T	6,545	XT	730	1.15	60.6	94.5	31.106	208-230/460	
		1800	326T	05018XT3H326T	6,545	XT	728	1.15	48.5	94.5	31.106	575	
		1200	364/5T	05012XT3E365T	10,597	XT	1109	1.15	58.1	94.1	33.701	208-230/460	
		1200	364/5T	05012XT3H365T	10,597	XT	1044	1.15	46.5	94.1	33.701	575	
		900	404/5T	05009XP3E404T	14,420	X1	1674	1.15	64.9	91.7	38.074	208-230/460	30
		900	404/5T	05009XT3E404T	22,443	XT	1342	1.15	68.0	93.6	38.074	208-230/460	
60	45	3600	364/5TS	06036XT3E364TS	9,988	XT	1113	1.15	68.3	94.1	31.575	208-230/460	
		3600	364/5TS	06036XT3H364TS	9,988	XT	1108	1.15	54.6	94.1	31.575	575	
		1800	364/5T	06018XT3E364T	10,460	XT	1107	1.15	68.3	95.0	33.701	208-230/460	
		1800	364/5T	06018XT3H364T	10,460	XT	1102	1.15	54.6	95.0	33.701	575	
		1200	404/5T	06012XT3E404T	13,196	XT	1270	1.15	70.4	94.5	38.074	208-230/460	
		1200	404/5T	06012XT3H404T	13,196	XT	1222	1.15	56.3	94.5	38.074	575	
		900	404/5T	06009XP3E405T	16,985	X1	1284	1.15	77.0	91.7	38.074	208-230/460	30
		900	404/5T	06009XT3E405T	26,900	XT	1287	1.15	75.9	93.0	38.074	208-230/460	
75	55	3600	364/5TS	07536XT3E365TS	11,285	XT	1108	1.15	82.4	94.1	31.575	208-230/460	
		3600	364/5TS	07536XT3H365TS	11,285	XT	1033	1.15	65.9	94.1	31.575	575	
		1800	364/5T	07518XT3E365T	11,125	XT	1108	1.15	83.2	95.4	33.701	208-230/460	
		1800	364/5T	07518XT3H365T	11,125	XT	1104	1.15	66.6	95.4	33.701	575	
		1200	404/5T	07512XT3E405T	13,836	XT	1320	1.15	87.0	94.5	38.074	208-230/460	
		900	444/5T	07509XP3E444T	21,094	X1	2180	1.15	90.5	93.0	43.797	208-230/460	30
		900	444/5T	07509XT3E444T	29,094	XT	1920	1.15	92.2	93.6	43.797	208-230/460	
100	75	3600	404/5TS	10036XT3E405TS	12,999	XT	1294	1.15	110	95.0	35.074	208-230/460	
		3600	404/5TS	10036XT3G405TS	12,999	XT	1214	1.15	110	95.0	35.074	460	
		3600	404/5TS	10036XT3H405TS	12,999	XT	1214	1.15	88.1	95.0	35.074	575	
		1800	404/5T	10018XT3E405T	14,206	XT	1312	1.15	113	95.4	38.074	208-230/460	
		1800	404/5T	10018XT3G405T	14,206	XT	1308	1.15	113	95.4	38.074	460	
		1800	404/5T	10018XT3H405T	14,206	XT	1307	1.15	90.4	95.4	38.074	575	
		1200	444/5T	10012XT3E444T	21,032	XT	2235	1.15	121	95.0	43.797	208-230/460	
		1200	444/5T	10012XT3G444T	21,032	XT	2225	1.15	121	95.0	43.797	460	
		900	444/5T	10009XP3E445T	25,321	X1	2223	1.15	123	93.0	43.797	208-230/460	30
		900	444/5T	10009XP3G445T	25,321	X1	2534	1.15	123	93.0	43.797	460	30
		900	444/5T	10009XT3E445T	31,191	XT	2061	1.15	125	94.1	43.797	208-230/460	
		900	444/5T	10009XT3G445T	31,191	XT	2061	1.15	125	94.1	43.797	460	

Continued on next page

THREE-PHASE

Foot Mount *continued*

HP	kW	RPM	NEMA Frame	Catalog Number	List Price	Mult. Symbol	Approx. Shipping Weight (lbs)	Service Factor	FL Amps @ High	FL. Eff (%)	"C" Dimension (in)	Voltage (V)	Notes
125	90	3600	444/5TS	12536XT3G444TS	20,874	XT	2182	1.15	137	95.0	40.047	460	
		1800	444/5T	12518XT3E444T	19,961	XT	2139	1.15	142	95.4	43.797	208-230/460	
		1800	444/5T	12518XT3G444T	19,961	XT	2133	1.15	142	95.4	43.797	460	
		1200	444/5T	12512XT3G445T	21,537	XT	2400	1.15	150	95.0	43.797	460	
		900	504/5	12509XP3G504	28,717	X1	2536	1.15	152	93.6	49.445	460	30
150	110	3600	444/5TS	15036XT3G445TS	21,320	XT	2320	1.15	161	95.4	40.047	460	
		1800	444/5T	15018XT3E445T	21,557	XT	2282	1.15	170	95.8	43.797	208-230/460	
		1800	444/5T	15018XT3G445T	21,557	XT	2336	1.15	170	95.8	43.797	460	
		1200	447T	15012XT3G447T	32,370	XT	2810	1.15	174	95.8	47.339	460	
		1200	504/5T	15012XT3G504	32,370	XT	2858	1.15	174	95.8	49.445	460	
		900	504/5	15009XP3G505	31,289	X1	3342	1.15	178	93.6	49.445	460	30
200	150	3600	447TS	20036XT3G447TS	29,446	XT	2656	1.15	221	95.8	43.589	460	
		1800	447T	20018XT3G447T	29,397	XT	2481	1.15	230	96.2	47.339	460	
		1800	504/5T	20018XT3G504	29,397	XT	2385	1.15	230	96.2	49.445	460	
		1200	447T	20012XT3G447T	33,613	XT	2812	1.15	249	95.8	47.339	460	
		900	586/7	20009XP3G586/7	47,701	X1	5607	1.15	255	94.5	61.389	460	30
250	185	3600	504/5S	25036XP3G505S	25,936	X1	2573	1.15	267	95.4	46.875	460	30
		3600	447TS	25036XT3G447TS	31,124	XT	2694	1.15	269	95.8	43.589	460	
		1800	504/5	25018XP3G505	27,388	X1	2826	1.15	283	95.4	49.445	460	30
		1800	447T	25018XT3G447T	32,866	XT	3070	1.15	284	96.2	47.339	460	
		1800	447T	25018XT3H447T	32,866	XT	2782	1.15	227	96.2	47.339	575	
		1200	586/7	25012XP3G586/7	46,557	X1	4002	1.15	305	95.0	61.389	460	30
		1200	449T	25012XT3G449T	48,048	XT	3352	1.15	299	95.8	54.996	460	
		900	586/7	25009XP3G586/7	50,701	X1	4815	1.15	313	95.0	61.389	460	30
300	220	3600	586/7S	30036XP3G586/7S	46,692	X1	3638	1.15	325	95.4	54.514	460	30
		3600	449TS	30036XT3G449TS	48,747	XT	3183	1.15	320	95.8	51.246	460	
		1800	586/7	30018XP3G586/7	40,772	X1	4150	1.15	329	95.4	61.389	460	30
		1800	449T	30018XT3G449T	42,566	XT	3278	1.15	334	96.2	54.996	460	
		1200	586/7	30012XP3G586/7	50,565	X1	4539	1.15	355	95.0	61.389	460	30
		1200	449T	30012XT3G449T	52,790	XT	3361	1.15	351	95.8	54.996	460	
		900	586/7	30009XP3G586/7	63,030	X1	6580	1.15	368	95.0	61.389	460	30
350	260	3600	586/7S	35036XP3G586/7S	54,890	X1	3859	1.15	384	95.4	54.514	460	30
		3600	449TS	35036XT3G449TS	65,868	XT	3802	1.15	379	95.8	51.246	460	
		1800	586/7	35018XP3G586/7	44,351	X1	4301	1.15	398	95.4	61.389	460	30
		1800	449T	35018XT3G449T	53,222	XT	3450	1.15	390	96.2	54.996	460	
		1200	586/7	35012XP3G586/7	59,710	X1	6352	1.15	428	95.4	61.389	460	30
		1200	586/7	35012XT3G586/7	71,652	XT	4916	1.15	426	95.8	61.389	460	
		900	586/7	35009XP3G586/7	64,770	X1	6807	1.15	440	95.0	61.389	460	30

Continued on next page

Refer to electrical and mechanical data sections for additional technical information. Please refer to back cover for description of "NOTES"

For detailed specifications, data sheets, drawings and performance curves visit http://catalog.wegelectric.com

Data subject to change without notice.

Foot Mount *continued*

HP	kW	RPM	NEMA Frame	Catalog Number	List Price	Mult. Symbol	Approx. Shipping Weight (lbs)	Service Factor	FL Amps @ High	FL. Eff (%)	"C" Dimension (in)	Voltage (V)	Notes
400	300	1800	586/7	40018XP3G586/7	50,913	X1	4332	1.15	459	95.4	61.389	460	30
		1800	586/7	40018XT3G586/7	61,096	XT	4325	1.15	460	96.2	61.389	460	
		1200	586/7	40012XP3G586/7	62,894	X1	6709	1.15	481	95.4	61.389	460	30
		1200	586/7	40012XT3G586/7	75,473	XT	5267	1.15	479	95.8	61.389	460	
450	330	1800	586/7	45018XP3G586/7	54,334	X1	5248	1.15	505	95.4	61.389	460	19;30
		1800	586/7	45018XT3G586/7	65,201	XT	4653	1.15	501	96.2	61.389	460	
		1200	586/7	45012XP3G586/7	67,577	X1	7132	1.15	543	95.4	61.389	460	30
500	370	1800	586/7	50018XP3G586/7	58,405	X1	5047	1.00	564	95.8	61.389	460	1;19;30
		1800	586/7	50018XT3G586/7	70,086	XT	5045	1.00	568	96.2	61.389	460	

Refer to electrical and mechanical data sections for additional technical information. Please refer to back cover for description of “NOTES”

For detailed specifications, data sheets, drawings and performance curves visit http://catalog.wegelectric.com

Explosion Proof Motors



THREE-PHASE

C-Flange – Foot Mount

HP	kW	RPM	NEMA Frame	Catalog Number	List Price	Mult. Symbol	Approx. Shipping Weight (lbs)	Service Factor	FL Amps @ High	FL. Eff (%)	"C" Dimension (in)	Voltage (V)	Notes
0.33	0.25	3600	56C	.3336XS3E56C	821	XF	21	1.00	0.60	69.8	10.520	208-230/460	9;17
		1800	56C	.3318XS3E56C	877	XF	23	1.00	0.60	76.7	10.520	208-230/460	9;17
0.5	0.37	3600	56C	.5036XS3E56C	856	XF	24	1.00	0.90	73.1	11.790	208-230/460	9
		1800	56C	.5018XS3E56C	926	XF	27	1.00	0.85	79.1	11.920	208-230/460	9
0.75	0.55	3600	56C	.7536XS3E56C	884	XF	25	1.00	1.20	77.1	11.790	208-230/460	9
		1800	56C	.7518XS3E56C	944	XF	28	1.00	1.40	78.6	12.290	208-230/460	9
1	0.75	3600	56C	00136XS3E56C	924	XF	27	1.00	1.60	79.0	11.920	208-230/460	9
		1800	56C	00118XS3E56C	1,007	XF	31	1.00	1.60	82.2	12.540	208-230/460	9
1	0.75	1800	143TC	00118XT3E143TC	1,054	XT	70	1.15	1.43	85.5	12.760	208-230/460	
		1200	145TC	00112XT3E145TC	1,107	XT	75	1.15	1.54	82.5	13.752	208-230/460	
1.5	1.1	3600	56C	00156XS3E56C	1,038	XF	30	1.00	2.10	81.7	12.290	208-230/460	9
		3600	143TC	00156XT3E143TC	1,069	XT	69	1.15	2.05	84.0	12.760	208-230/460	
		1800	56HC	00158XS3E56HC	1,073	XF	41	1.00	2.10	86.0	14.040	208-230/460	9
		1800	145TC	00158XT3E145TC	1,116	XT	77	1.15	2.05	86.5	13.752	208-230/460	
		1200	182TC	00152XT3E182TC	1,270	XT	121	1.15	2.32	87.5	14.862	208-230/460	
2	1.5	3600	56HC	00236XS3E56HC	1,125	XF	35	1.00	2.70	83.7	14.040	208-230/460	9
		3600	145TC	00236XT3E145TC	1,045	XT	80	1.15	2.69	85.5	13.752	208-230/460	
		1800	56HC	00218XS3E56HC	1,162	XF	48	1.00	2.70	86.9	15.040	208-230/460	9
		1800	145TC	00218XT3E145TC	1,148	XT	77	1.15	2.72	86.5	13.752	208-230/460	
		1800	145TC	00218XT3H145TC	1,148	XT	77	1.15	2.18	86.5	13.752	575	
		1200	184TC	00212XT3E184TC	1,323	XT	138	1.15	3.13	88.5	15.862	208-230/460	
3	2.2	3600	56HC	00336XS3E56HC	1,394	XF	46	1.00	3.80	86.7	14.420	208-230/460	9
		3600	182TC	00336XT3E182TC	1,357	XT	122	1.15	3.80	86.5	14.862	208-230/460	
		1800	182TC	00318XT3E182TC	1,373	XT	121	1.15	3.91	89.5	14.862	208-230/460	
		1800	182TC	00318XT3H182TC	1,373	XT	121	1.15	3.13	89.5	14.862	575	
		1200	213TC	00312XT3E213TC	1,975	XT	201	1.15	4.41	89.5	17.952	208-230/460	
5	3.7	3600	184TC	00536XT3E184TC	1,325	XT	135	1.15	6.10	88.5	15.862	208-230/460	
		3600	184TC	00536XT3H184TC	1,325	XT	135	1.15	4.88	88.5	15.862	575	
		1800	184TC	00518XT3E184TC	1,385	XT	138	1.15	6.57	89.5	15.862	208-230/460	
		1200	215TC	00512XT3E215TC	1,975	XT	227	1.15	6.83	89.5	19.450	208-230/460	
7.5	5.5	3600	213TC	00736XT3E213TC	1,722	XT	197	1.15	8.97	89.5	17.952	208-230/460	
		1800	213TC	00718XT3E213TC	2,080	XT	187	1.15	9.41	91.7	17.952	208-230/460	
		1800	213TC	00718XT3H213TC	2,080	XT	192	1.15	7.53	91.7	17.952	575	
10	7.5	3600	215TC	01036XT3E215TC	1,803	XT	221	1.15	12.0	90.2	19.450	208-230/460	
		3600	215TC	01036XT3H215TC	1,803	XT	220	1.15	9.60	90.2	19.450	575	
		1800	215TC	01018XT3E215TC	2,180	XT	227	1.15	12.7	91.7	19.450	208-230/460	
		1800	215TC	01018XT3H215TC	2,180	XT	227	1.15	10.2	91.7	19.450	575	
15	11	3600	254TC	01536XT3E254TC	2,490	XT	349	1.15	16.9	91.7	23.175	208-230/460	
		1800	254TC	01518XT3E254TC	2,976	XT	310	1.15	18.4	92.4	23.175	208-230/460	

Continued on next page

Note: Flanged motors on Cast Iron frame sizes 143/5 to 254/6 have non-NEMA BA dimension. Refer to mechanical section of this catalog for details.

Refer to electrical and mechanical data sections for additional technical information. Please refer to back cover for description of "NOTES"

For detailed specifications, data sheets, drawings and performance curves visit http://catalog.wegelectric.com

Data subject to change without notice.

C-Flange – Foot Mount *continued*

HP	kW	RPM	NEMA Frame	Catalog Number	List Price	Mult. Symbol	Approx. Shipping Weight (lbs)	Service Factor	FL Amps @ High	FL. Eff (%)	"C" Dimension (in)	Voltage (V)	Notes
20	15	1800	256TC	02018XT3E256TC	3,331	XT	390	1.15	25.0	93.0	24.923	208-230/460	
		1800	256TC	02018XT3H256TC	3,111	XT	372	1.15	20.0	93.0	24.923	575	
25	18.5	1800	284TC	02518XT3E284TC	4,262	XT	504	1.15	29.9	93.6	26.407	208-230/460	
		1800	284TC	02518XT3H284TC	4,262	XT	503	1.15	23.9	93.6	26.407	575	
30	22	1800	286TC	03018XT3E286TC	4,672	XT	544	1.15	36.0	93.6	27.905	208-230/460	
40	30	1800	324TC	04018XT3E324TC	5,919	XT	706	1.15	48.2	94.1	29.602	208-230/460	
50	37	1800	326TC	05018XT3E326TC	7,084	XT	737	1.15	60.6	94.5	31.106	208-230/460	
60	45	1800	364/5TC	06018XT3E364TC	11,116	XT	1140	1.15	68.3	95.0	33.701	208-230/460	
75	55	1800	364/5TC	07518XT3E365TC	11,781	XT	1142	1.15	83.2	95.4	33.701	208-230/460	
100	75	1800	404/5TC	10018XT3E405TC	14,993	XT	1346	1.15	113	95.4	38.074	208-230/460	

Note: Flanged motors on Cast Iron frame sizes 143/5 to 254/6 have non-NEMA BA dimension. Refer to mechanical section of this catalog for details.

THREE-PHASE

C-Flange – Footless

HP	kW	RPM	NEMA Frame	Catalog Number	List Price	Mult. Symbol	Approx. Shipping Weight (lbs)	Service Factor	FL Amps @ High	FL. Eff (%)	"C" Dimension (in)	Voltage (V)	Notes
1	0.75	1800	143TC	00118XP3ER143TC	764	X1	68	1.15	1.49	82.5	13.469	208-230/460	15;30
		1800	143TC	00118XT3ER143TC	1,072	XT	69	1.15	1.43	85.5	13.469	208-230/460	15
1.5	1.1	1800	145TC	00158XP3ER145TC	790	X1	75	1.15	2.05	84.0	14.461	208-230/460	15;30
		1800	145TC	00158XT3ER145TC	1,135	XT	77	1.15	2.05	86.5	14.461	208-230/460	15
2	1.5	1800	145TC	00218XP3ER145TC	802	X1	76	1.15	2.77	84.0	14.461	208-230/460	15;30
		1800	145TC	00218XT3ER145TC	1,168	XT	77	1.15	2.72	86.5	14.461	208-230/460	15
3	2.2	1800	182TC	00318XP3ER182TC	1,030	X1	119	1.15	4.05	87.5	16.082	208-230/460	15;30
		1800	182TC	00318XT3ER182TC	1,397	XT	118	1.15	3.91	89.5	16.082	208-230/460	15
5	3.7	1800	184TC	00518XP3ER184TC	1,056	X1	114	1.15	6.55	87.5	17.082	208-230/460	15;30
		1800	184TC	00518XP3HR184TC	1,053	X1	137	1.15	5.24	87.5	17.082	575	15
		1800	184TC	00518XT3ER184TC	1,409	XT	135	1.15	6.57	89.5	17.082	208-230/460	15
7.5	5.5	1800	213TC	00718XP3ER213TC	1,515	X1	185	1.15	9.53	89.5	19.172	208-230/460	15;30
		1800	213TC	00718XT3ER213TC	2,118	XT	187	1.15	9.41	91.7	19.172	208-230/460	15
10	7.5	1800	215TC	01018XP3ER215TC	1,618	X1	214	1.15	12.8	89.5	20.670	208-230/460	15;30
		1800	215TC	01018XT3ER215TC	2,220	XT	222	1.15	12.7	91.7	20.670	208-230/460	15
15	11	1800	254TC	01518XP3ER254TC	2,111	X1	352	1.15	18.1	91.0	25.025	208-230/460	15;30
		1800	254TC	01518XP3HR254TC	2,075	X1	319	1.15	14.5	91.0	25.025	575	15
		1800	254TC	01518XT3ER254TC	3,029	XT	312	1.15	18.4	92.4	25.025	208-230/460	15
20	15	1800	256TC	02018XP3ER256TC	2,556	X1	352	1.15	24.6	91.0	26.773	208-230/460	15;30
		1800	256TC	02018XT3ER256TC	3,391	XT	386	1.15	25.0	93.0	26.773	208-230/460	15
25	18.5	1800	284TC	02518XP3ER284TC	3,257	X1	510	1.15	29.6	92.4	28.651	208-230/460	15;30
		1800	284TC	02518XT3ER284TC	4,340	XT	509	1.15	29.9	93.6	28.651	208-230/460	15
30	22	3600	286TS	03036XP3ER286TSC	3,472	X1	472	1.15	33.8	91.0	28.775	208-230/460	15;30
		1800	286TC	03018XP3ER286TC	3,692	X1	547	1.15	34.7	92.4	30.149	208-230/460	15;30
		1800	286TC	03018XT3ER286TC	4,758	XT	544	1.15	36.0	93.6	30.149	208-230/460	15
40	30	1800	324TC	04018XP3ER324TC	4,643	X1	655	1.15	47.6	93.0	32.240	208-230/460	15;30
		1800	324TC	04018XT3ER324TC	6,027	XT	699	1.15	48.2	94.1	32.240	208-230/460	15
50	37	1800	326TC	05018XP3ER326TC	5,425	X1	730	1.15	58.7	93.0	33.744	208-230/460	15;30
		1800	326TC	05018XT3ER326TC	7,215	XT	733	1.15	60.6	94.5	33.744	208-230/460	15

Refer to electrical and mechanical data sections for additional technical information. Please refer to back cover for description of "NOTES"

For detailed specifications, data sheets, drawings and performance curves visit http://catalog.wegelectric.com

Data subject to change without notice.

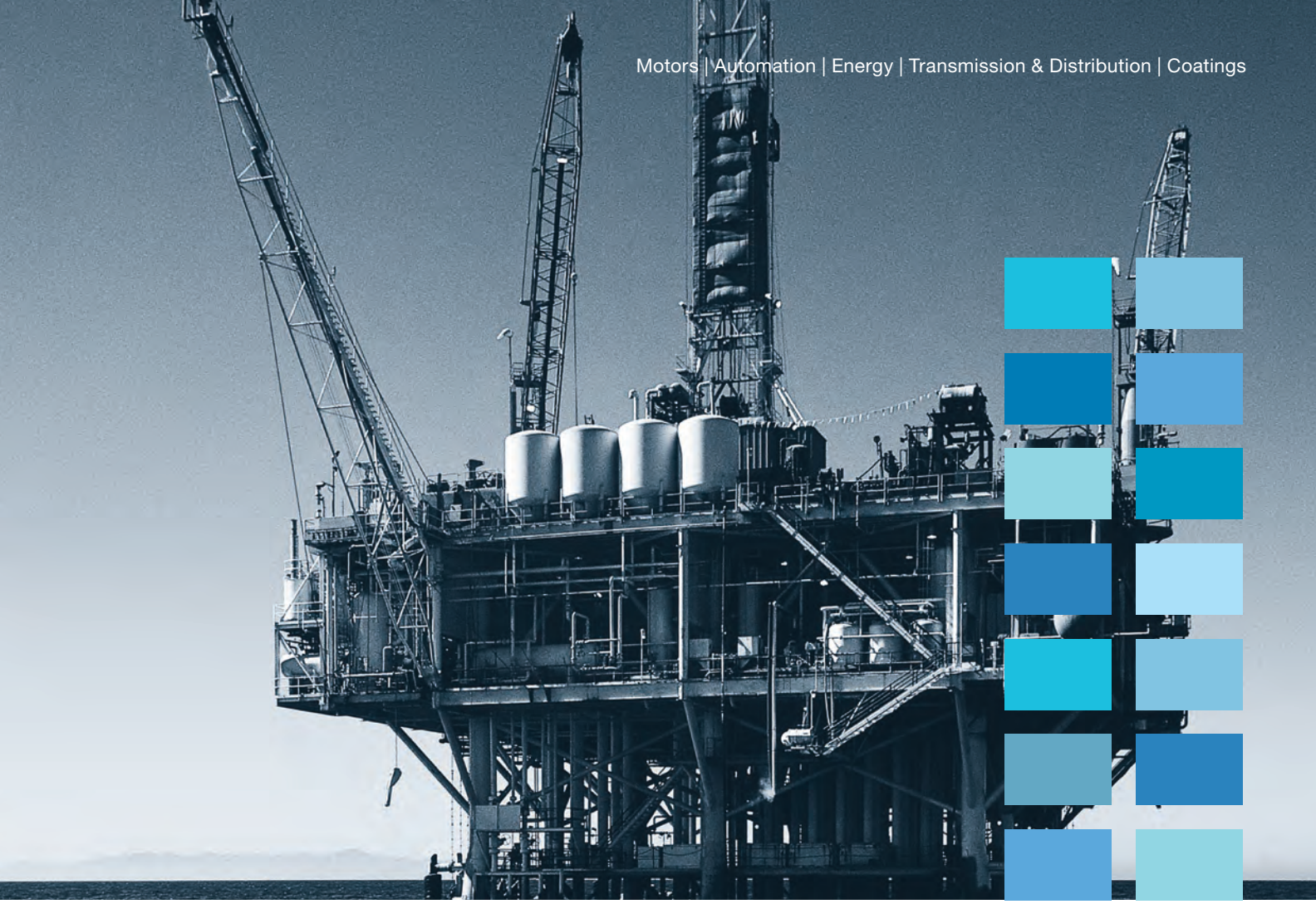

WEG offers a complete range of products and services for the Oil & Gas segment

WEG / EM has manufactured motors and generators for the petroleum industry for over 100 years. We understand that every application is different and will work with the customer to meet their needs.

Motors can be designed to API Standards (where applicable), meeting welding, structural, vibration and testing requirements. Motors can be built for operation in classified hazardous areas per NEC or IEC/EN (ATEX) requirements. For synchronous motors, standard brushless excitation is non-sparking for hazardous atmospheres.



Synchronous and Induction Motors
Up to 150,000 HP



Turbogenerators
Up to 150 MW



NEMA, Above NEMA and IEC Low Voltage Motors
Up to 2,000 HP



Low and Medium Voltage Drives and Soft Starters
Up to 10,000 HP

1-800-ASK-4WEG Visit us online at www.weg.net/us Transforming energy into solutions.

Three-Phase General Purpose Motors

ATEX MOTORS

TEFC - Ex d

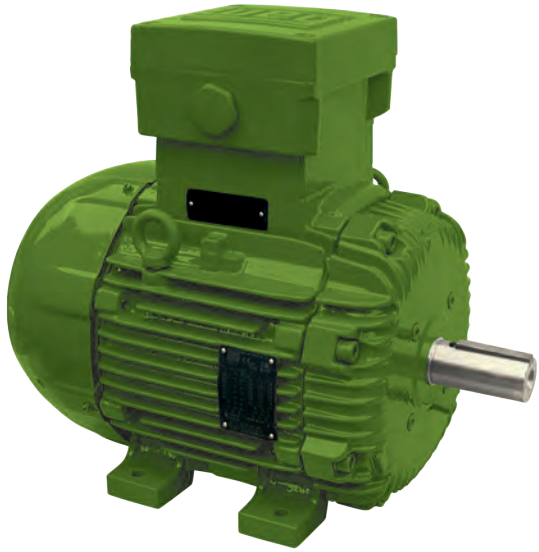

Standard Features:

- 50 Hz and and 60 Hz rated (1.00 service factor)
- Class F insulation (Impregnation Resin and magnet Wire are class H)
- F3 mounted as standard
- Stainless Steel Nameplate - Laser etched with high contrast background
- Regreasable ball bearings (Frames 225 and up)
- Gasketed conduit box
- Zone 1 and 2, Groups IIA and IIB, class of temperature T4
- Suitable for WYE/Delta Start
- Design N
- Conductive plastic fan (frames 63 up to 315)
- Aluminum fan (frame 355)
- Lip Seal on both endshields
- Thermistors 1 per phase

ADDITIONAL TECHNICAL DATA

ELECTRICAL DATA: **p. B-91**

MECHANICAL DATA: **Contact WEG**



ATEX Foot Mount

HP	kW	RPM	NEMA Frame	Catalog Number	List Price	Mult. Symbol	Approx. Shipping Weight (lbs)	Service Factor	FL Amps @ High	FL. Eff (%)	"C" Dimension (in)	Voltage (V)	Notes
		3000	90S	E.7536XP3WAX90SF3	1,267	XD	67.3	1.00	1.58	80.0	12.441	220-240/380-415//440-460	8;11;27
1	0.75	1500//1800	90S	E.7518XP3WAX90SF3	1,283	XD	77	1.00	1.72	80.0	12.441	220-240/380-415//440-460	8;11;27
		1000//1200	90L	E.7512XP3WAX90LF3	1,199	XD	74.3	1.00	1.92	76.5	13.425	220-240/380-415//440-460	8;11;27
		3000	90S	E00136XP3WAX90SF3	1,318	XD	67.3	1.00	2.25	81.5	12.441	220-240/380-415//440-460	8;11;27
1.5	1.1	1500//1800	90L	E00118XP3WAX90LF3	1,334	XD	74.3	1.00	2.37	82.5	13.425	220-240/380-415//440-460	8;11;27
		1000//1200	90L	E00112XP3WAX90LF3	1,588	XD	74.3	1.00	3.06	78.1	13.425	220-240/380-415//440-460	8;11;27
		3000	90S	E00156XP3WAX90SF3	1,371	XD	59.5	1.00	3.06	84.2	12.441	220-240/380-415//440-460	8;11;27
2	1.5	1500//1800	100L	E00158XP3WAX100LF3	1,488	XD	101	1.00	3.15	83.5	15.118	220-240/380-415//440-460	8;11;27
		1000//1200	100L	E00152XP3WAX100LF3	1,757	XD	101	1.00	3.77	80.5	15.118	220-240/380-415//440-460	8;11;27
		3000	90L	E00236XP3WAX90LF3	1,534	XD	50.7	1.00	4.49	84.2	13.425	220-240/380-415//440-460	8;11;27
3	2.2	1500//1800	100L	E00218XP3WAX100LF3	1,783	XD	111	1.00	4.60	85.0	15.118	220-240/380-415//440-460	8;11;27
		1000//1200	112M	E00212XP3YAX112MF3	2,040	XD	126	1.00	5.20	81.8	15.512	380-415/660-690//440-460	8;11;27
		3000	100L	E00336XP3WAX100LF3	1,918	XD	92.6	1.00	5.51	87.1	15.118	220-240/380-415//440-460	8;11;27
4	3	1500//1800	112M	E00318XP3YAX112MF3	2,137	XD	137	1.00	6.12	86.0	15.512	380-415/660-690//440-460	8;11;27
		1000//1200	132S	E00312XP3YAX132SF3	3,224	XD	180	1.00	6.70	85.0	17.756	380-415/660-690//440-460	8;11;27
		3000	112M	E00436XP3YAX112MF3	2,414	XD	132	1.00	7.31	87.5	15.512	380-415/660-690//440-460	8;11;27
5.5	4	1500//1800	112M	E00418XP3YAX112MF3	2,468	XD	147	1.00	8.22	87.2	15.512	380-415/660-690//440-460	8;11;27
		1000//1200	132M	E00412XP3YAX132MF3	3,607	XD	202	1.00	8.62	85.5	19.252	380-415/660-690//440-460	8;11;27
		3000	132S	E00536XP3YAX132SF3	3,083	XD	188	1.00	10.1	88.0	17.756	380-415/660-690//440-460	8;11;27
7.5	5.5	1500//1800	132S	E00518XP3YAX132SF3	3,025	XD	184	1.00	10.6	89.2	17.756	380-415/660-690//440-460	8;11;27
		1000//1200	132M	E00512XP3YAX132MF3	3,800	XD	219	1.00	12.1	86.1	19.252	380-415/660-690//440-460	8;11;27
		3000	132S	E00736XP3YAX132SF3	3,556	XD	179	1.00	14.2	88.8	17.756	380-415/660-690//440-460	8;11;27
10	7.5	1500//1800	132M	E00718XP3YAX132MF3	3,685	XD	224	1.00	13.8	89.5	19.252	380-415/660-690//440-460	8;11;27
		1000//1200	160M	E00712XP3YAX160MF3	5,017	XD	333	1.00	14.7	88.8	23.543	380-415/660-690//440-460	8;11;27
		3000	160M	E01136XP3YAX160MF3	4,148	XD	334	1.00	20.0	90.8	23.543	380-415/660-690//440-460	8;11;27
15	11	1500//1800	160M	E01118XP3YAX160MF3	4,151	XD	342	1.00	20.7	90.6	23.543	380-415/660-690//440-460	8;11;27
		1000//1200	160L	E01112XP3YAX160LF3	5,281	XD	375	1.00	22.3	89.6	25.669	380-415/660-690//440-460	8;11;27
		3000	160M	E01536XP3YAX160MF3	4,924	XD	334	1.00	26.4	91.0	23.543	380-415/660-690//440-460	8;11;27
20	15	1500//1800	160L	E01518XP3YAX160LF3	4,608	XD	364	1.00	28.1	91.2	25.669	380-415/660-690//440-460	8;11;27
		1000//1200	180L	E01512XP3YAX180LF3	6,436	XD	512	1.00	26.8	89.8	27.638	380-415/660-690//440-460	8;11;27
		3000	160L	E01836XP3YAX160LF3	5,915	XD	392	1.00	32.8	91.3	25.669	380-415/660-690//440-460	8;11;27
25	18.5	1500//1800	180M	E01818XP3YAX180MF3	6,059	XD	490	1.00	34.5	92.4	26.142	380-415/660-690//440-460	8;11;27
		1000//1200	200L	E01812XP3YAX200LF3	8,379	XD	617	1.00	34.6	91.5	30.197	380-415/660-690//440-460	8;11;27
		3000	180M	E02236XP3YAX180MF3	7,099	XD	480	1.00	38.3	92.0	26.142	380-415/660-690//440-460	8;11;27
30	22	1500//1800	180L	E02218XP3YAX180LF3	6,706	XD	478	1.00	41.1	92.5	27.638	380-415/660-690//440-460	8;11;27
		1000//1200	200L	E02212XP3YAX200LF3	9,487	XD	529	1.00	41.2	92.0	30.197	380-415/660-690//440-460	8;11;27
		3000	200L	E03036XP3YAX200LF3	8,824	XD	647	1.00	51.6	93.0	30.197	380-415/660-690//440-460	8;11;27
40	30	1500//1800	200L	E03018XP3YAX200LF3	8,717	XD	684	1.00	54.9	93.2	30.197	380-415/660-690//440-460	8;11;27
		1000//1200	225S/M	E03012XP3YAX225SMF3	12,936	XD	937	1.00	53.1	92.6	33.425	380-415/660-690//440-460	8;11;27

Continued on next page

THREE-PHASE

ATEX Foot Mount *continued*

HP	kW	RPM	NEMA Frame	Catalog Number	List Price	Mult. Symbol	Approx. Shipping Weight (lbs)	Service Factor	FL Amps @ High	FL. Eff (%)	"C" Dimension (in)	Voltage (V)	Notes
		3000	200L	E003736XP3YAX200LF3	10,812	XD	573	1.00	63.3	94.6	30.197	380-415/660-690//440-460	8;11;27
50	37	1500//1800	225S/M	E03718XP3YAX225SMF3	11,099	XD	1018	1.00	63.7	93.6	33.425	380-415/660-690//440-460	8;11;27
		1000//1200	250S/M	E03712XP3YAX250SMF3	15,176	XD	1103	1.00	67.4	93.1	36.339	380-415/660-690//440-460	8;11;27
		3000	225S/M	E04536XP3YAX225SMF3	17,255	XD	1017	1.00	75.1	93.7	33.425	380-415/660-690//440-460	8;11;27
60	45	1500//1800	225S/M	E04518XP3YAX225SMF3	12,846	XD	970	1.00	76.1	93.8	33.425	380-415/660-690//440-460	8;11;27
		1000//1200	280S/M	E04512XP3YAX280SMF3	21,544	XD	1625	1.00	83.2	93.5	40.787	380-415/660-690//440-460	8;11;27
		3000	250S/M	E05536XP3YAX250SMF3	21,608	XD	1131	1.00	91.5	94.0	36.339	380-415/660-690//440-460	8;11;27
75	55	1500//1800	250S/M	E05518XP3YAX250SMF3	19,034	XD	1226	1.00	91.8	94.0	36.339	380-415/660-690//440-460	8;11;27
		1000//1200	280S/M	E05512XP3YAX280SMF3	27,320	XD	1704	1.00	100	93.7	40.787	380-415/660-690//440-460	8;11;27
		3000	280S/M	E07536XP3YAX280SMF3	30,248	XD	1854	1.00	124	94.5	40.787	380-415/660-690//440-460	8;11;27
100	75	1500//1800	280S/M	E07518XP3YAX280SMF3	23,986	XD	1852	1.00	126	94.8	40.787	380-415/660-690//440-460	8;11;27
		1000//1200	315S/M	E07512XP3YAX315SMF3	31,133	XD	1599	1.00	133	94.1	45.512	380-415/660-690//440-460	8;11;27
		3000	280S/M	E09036XP3YAX280SMF3	36,063	XD	1934	1.00	149	94.8	40.787	380-415/660-690//440-460	8;11;27
125	90	1500//1800	280S/M	E09018XP3YAX280SMF3	33,209	XD	2060	1.00	151	94.8	40.787	380-415/660-690//440-460	8;11;27
		1000//1200	315S/M	E09012XP3YAX315SMF3	40,124	XD	2271	1.00	161	94.4	45.512	380-415/660-690//440-460	8;11;27
		3000	315S/M	E11036XP3YAX315SMF3	42,763	XD	2205	1.00	182	95.0	45.512	380-415/660-690//440-460	8;11;27
150	110	1500//1800	315S/M	E11018XP3YAX315SMF3	37,846	XD	2426	1.00	184	95.2	45.512	380-415/660-690//440-460	8;11;27
		1000//1200	315S/M	E11012XP3YAX315SMF3	48,658	XD	2569	1.00	194	94.6	45.512	380-415/660-690//440-460	8;11;27
		3000	315S/M	E13236XP3YAX315SMF3	54,064	XD	2337	1.00	215	95.3	45.512	380-415/660-690//440-460	8;11;27
175	132	1500//1800	315S/M	E13218XP3YAX315SMF3	45,939	XD	2624	1.00	221	95.3	45.512	380-415/660-690//440-460	8;11;27
		1000//1200	355M/L	E13212XP3YAX355MLF3	82,346	XD	3749	1.00	240	95.2	57.835	380-415/660-690//440-460	8;11;27
		3000	315S/M	16036XP3YAX315SMF3	67,306	XD	2567	1.00	260	95.4	45.512	380-415/660-690//440-460	8;11
220	160	1500//1800	315S/M	16018XP3YAX315SMF3	50,129	XD	2668	1.00	270	95.4	45.512	380-415/660-690//440-460	8;11
		1000//1200	355M/L	16012XP3YAX355MLF3	90,159	XD	3969	1.00	290	95.4	57.835	380-415/660-690//440-460	8;11
		3000	355M/L	20036XP3YAX355MLF3	100,962	XD	4035	1.00	320	95.1	57.835	380-415/660-690//440-460	8;11
270	200	1500//1800	355M/L	20018XP3YAX355MLF3	80,905	XD	4006	1.00	333	96.0	57.835	380-415/660-690//440-460	8;11
		1000//1200	355M/L	20012XP3YAX355MLF3	110,130	XD	4212	1.00	368	95.4	57.835	380-415/660-690//440-460	8;11
		3000	355M/L	25036XP3YAX355MLF3	111,375	XD	4348	1.00	392	95.7	57.835	380-415/660-690//440-460	8;11
340	250	1500//1800	355M/L	25018XP3YAX355MLF3	94,903	XD	4236	1.00	415	95.8	57.835	380-415/660-690//440-460	8;11
		1000//1200	355M/L	25012XP3YAX355MLF3	133,308	XD	4818	1.00	452	95.6	57.835	380-415/660-690//440-460	8;11
430	315	1500//1800	355M/L	31518XP3YAX355MLF3	108,540	XD	4844	1.00	516	95.9	57.835	380-415/660-690//440-460	8;11;27

Refer to electrical and mechanical data sections for additional technical information. Please refer to back cover for description of "NOTES"

For detailed specifications, data sheets, drawings and performance curves visit http://catalog.wegelectric.com

Data subject to change without notice.

Wash Down Duty - Shark™ – Stainless Steel Motors

TEFC - Three Phase - C-Face Foot Mount

For food processing, pharmaceutical and other applications requiring extreme cleanliness and frequent washdowns.

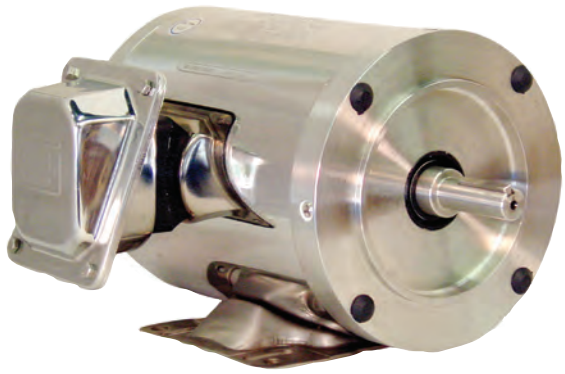

Standard Features:

- Class F epoxy insulation
- F1 Mounted
- Nameplate data laser etched on body of motor

Features that make a difference:

- All 304 stainless steel frame, endbells and terminal box
- Thermostats on each phase-auto reset
- Double lip seals
- 4 drain plugs in endbells
- Locked DE bearings

Inverter Rated:
10 : 1 for variable torque
6:1 Constant Torque

ADDITIONAL TECHNICAL DATA

ELECTRICAL DATA: p. B-80
MECHANICAL DATA: p. C-62

Wash Down Duty – Shark™ – Stainless Steel



Three-Phase
TEFC – C-Face Foot Mount – NEMA Premium

HP	kW	RPM	NEMA Frame	Catalog Number	List Price	Mult. Symbol	Approx. Shipping Weight (lbs)	Service Factor	FL Amps @ High	FL. Eff (%)	"C" Dimension (in)	Voltage (V)	Notes
1	0.75	1800	143TC	00118ET3ESS143TC	857	S1	39	1.15	1.40	85.5	12.600	208-230/460	21
1.5	1.1	1800	145TC	00158ET3ESS145TC	872	S1	70	1.15	2.08	86.5	13.600	208-230/460	21
2	1.5	3600	145TC	00236ET3ESS145TC	1,113	S1	49	1.15	2.58	85.5	13.600	208-230/460	21
		1800	145TC	00218ET3ESS145TC	1,219	S1	52	1.15	2.78	86.5	13.600	208-230/460	21
3	2.2	3600	182TC	00336ET3ESS182TC	1,564	S1	95	1.15	3.71	86.5	16.000	208-230/460	21
		1800	182TC	00318ET3ESS182TC	1,453	S1	102	1.15	3.65	89.5	16.000	208-230/460	21
5	3.7	3600	184TC	00536ET3ESS184TC	1,779	S1	116	1.15	6.01	88.5	17.000	208-230/460	21
		1800	184TC	00518ET3ESS184TC	1,607	S1	116	1.15	6.08	89.5	17.000	208-230/460	21
7.5	5.5	3600	213TC	00736ET3ESS213TC	2,208	S1	175	1.15	8.90	89.7	22.000	208-230/460	21
		1800	213TC	00718ET3ESS213TC	2,201	S1	190	1.15	9.01	91.7	22.000	208-230/460	21
10	7.5	3600	215TC	01036ET3ESS215TC	2,713	S1	202	1.15	11.8	90.2	22.000	208-230/460	21
		1800	184TC	01018ET3ESS184TC	2,359	S1	202	1.15	12.0	91.7	17.000	208-230/460	21
		1800	215TC	01018ET3ESS215TC	2,452	S1	207	1.15	12.0	91.7	22.000	208-230/460	21

Refer to electrical and mechanical data sections for additional technical information. Please refer to back cover for description of "NOTES"

For detailed specifications, data sheets, drawings and performance curves visit http://catalog.wegelectric.com

Data subject to change without notice.



Three-Phase

TEFC – C-Face Foot Mount – High Efficiency

HP	kW	RPM	NEMA Frame	Catalog Number	List Price	Mult. Symbol	Approx. Shipping Weight (lbs)	Service Factor	FL Amps @ High	FL. Eff (%)	"C" Dimension (in)	Voltage (V)	Notes
0.33	0.25	1800	56C	.3318EP3ESS56C	550	S1	41	1.15	0.53	79.8	11.250	208-230/460	17;21
0.5	0.37	3600	56C	.5036EP3ESS56C	569	S1	42	1.15	0.65	78.3	11.250	208-230/460	17;21
		1800	56C	.5018EP3ESS56C	575	S1	48	1.15	0.73	81.2	11.250	208-230/460	17;21
		1200	56C	.5012EP3ESS56C	682	S1	63	1.15	0.86	79.1	11.670	208-230/460	17;21
0.75	0.55	3600	56C	.7536EP3ESS56C	590	S1	47	1.15	1.02	81.9	11.250	208-230/460	17;21
		1800	56C	.7518EP3ESS56C	616	S1	53	1.15	1.06	81.3	11.250	208-230/460	17;21
		1200	56HC	.7512EP3ESS56C	723	S1	68	1.15	1.22	82.9	11.670	208-230/460	17;21
1	0.75	3600	56HC	00136EP3ESS56C	649	S1	58	1.15	1.20	83.3	11.250	208-230/460	21
		3600	56HC	00136NP3ESS56C	813	S1	58	1.15	1.20	83.3	11.250	208-230/460	17;21
		1800	56C	00118EP3ESS56C	669	S1	60	1.15	1.40	82.3	11.250	208-230/460	21
		1800	56C	00118NP3ESS56C	669	S1	60	1.15	1.40	82.3	11.250	208-230/460	17;21
1.5	1.1	3600	56HC	00156EP3ESS56C	764	S1	64	1.15	1.85	82.3	11.250	208-230/460	21
		1800	56HC	00158EP3ESS56C	783	S1	65	1.15	2.05	82.0	11.250	208-230/460	21
2	1.5	3600	56HC	00236EP3ESS56C	916	S1	73	1.15	2.45	83.0	11.250	208-230/460	21
		1800	56HC	00218EP3ESS56C	927	S1	78	1.15	2.55	85.0	11.250	208-230/460	21

Refer to electrical and mechanical data sections for additional technical information. Please refer to back cover for description of "NOTES"

For detailed specifications, data sheets, drawings and performance curves visit http://catalog.wegelectric.com

Three-Phase

TEFC – C-Face Footless – High Efficiency

HP	kW	RPM	NEMA Frame	Catalog Number	List Price	Mult. Symbol	Approx. Shipping Weight (lbs)	Service Factor	FL Amps @ High	FL. Eff (%)	"C" Dimension (in)	Voltage (V)	Notes
0.33	0.25	1800	56C	.3318EP3ESS56CFL	550	S1	40	1.15	0.53	79.8	11.250	208-230/460	17;20;21
0.5	0.37	3600	56C	.5036EP3ESS56CFL	569	S1	42	1.15	0.65	78.3	11.250	208-230/460	17;20;21
		1800	56C	.5018EP3ESS56CFL	575	S1	47	1.15	0.73	81.2	11.250	208-230/460	17;20;21
		1200	56C	.5012EP3ESS56CFL	682	S1	63	1.15	0.86	79.1	11.670	208-230/460	17;20;21
0.75	0.55	3600	56C	.7536EP3ESS56CFL	590	S1	47	1.15	1.02	81.9	11.250	208-230/460	17;20;21
		1800	56C	.7518EP3ESS56CFL	616	S1	52	1.15	1.06	81.3	11.250	208-230/460	17;20;21
		1200	56C	.7512EP3ESS56CFL	723	S1	64	1.15	1.22	82.9	11.670	208-230/460	17;20;21
1	0.75	3600	56C	00136EP3ESS56CFL	649	S1	57	1.15	1.20	83.3	11.250	208-230/460	20;21
		3600	56C	00136NP3ESS56CFL	813	S1	57	1.15	1.20	83.3	11.250	208-230/460	17;20;21
		1800	143TC	00118EP3ESS143TCFL	714	S1	75	1.15	1.50	82.5	11.700	208-230/460	21
		1800	56C	00118EP3ESS56CFL	669	S1	59	1.15	1.40	82.3	11.250	208-230/460	20;21
		1800	143TC	00118NP3ESS143TCFL	714	S1	75	1.15	1.40	82.3	13.230	208-230/460	17;21
		1800	56C	00118NP3ESS56CFL	669	S1	59	1.15	1.40	82.3	11.250	208-230/460	17;20;21
1.5	1.1	3600	145TC	00156EP3ESS145TCFL	777	S1	72	1.15	2.00	82.5	13.700	208-230/460	21
		3600	56C	00156EP3ESS56CFL	764	S1	63	1.15	1.85	82.3	11.250	208-230/460	20;21
		1800	145TC	00158EP3ESS145TCFL	790	S1	62	1.15	2.20	84.0	13.700	208-230/460	21
		1800	56C	00158EP3ESS56CFL	783	S1	64	1.15	2.05	82.0	11.250	208-230/460	20;21
2	1.5	3600	145TC	00236EP3ESS145TCFL	1,005	S1	82	1.15	2.70	84.0	13.700	208-230/460	21
		3600	56C	00236EP3ESS56CFL	916	S1	78	1.15	2.45	83.0	11.250	208-230/460	20;21
		1800	145TC	00218EP3ESS145TCFL	1,016	S1	80	1.15	2.80	84.0	13.700	208-230/460	21
		1800	56C	00218EP3ESS56CFL	927	S1	78	1.15	2.55	85.0	11.250	208-230/460	20;21
3	2.2	3600	145TC	00336EP3ESS145TCFL	1,303	S1	90	1.15	3.80	85.5	13.700	208-230/460	21
		3600	182TC	00336EP3ESS182TCFL	1,303	S1	95	1.15	3.80	85.5	14.900	208-230/460	21
		1800	182TC	00318EP3ESS182TCFL	1,307	S1	102	1.15	3.90	87.5	14.900	208-230/460	21
5	3.7	3600	184TC	00536EP3ESS184TCFL	1,547	S1	115	1.15	6.10	87.5	16.000	208-230/460	21
		1800	184TC	00518EP3ESS184TCFL	1,397	S1	130	1.15	6.50	87.5	16.000	208-230/460	21
7.5	5.5	3600	213TC	00736EP3ESS213TCFL	1,920	S1	175	1.15	8.90	88.5	19.000	208-230/460	21
		1800	213TC	00718EP3ESS213TCFL	1,914	S1	190	1.15	9.40	89.5	19.000	208-230/460	21
10	7.5	3600	215TC	01036EP3ESS215TCFL	2,359	S1	202	1.15	11.8	89.5	22.500	208-230/460	21
		1800	215TC	01018EP3ESS215TCFL	2,132	S1	207	1.15	12.5	90.2	22.500	208-230/460	21

Refer to electrical and mechanical data sections for additional technical information. Please refer to back cover for description of "NOTES"

For detailed specifications, data sheets, drawings and performance curves visit http://catalog.wegelectric.com

Data subject to change without notice.

WEG Rolled Steel Line

Great WEG quality and flexibility in a new LIGHTER frame

Investing over 2.5% of our revenue in R&D for electric motors every year, WEG takes pride in engineering and manufacturing motors that run cooler, last longer, and are easy to install and maintain.

Available in Open Drip and Totally Enclosed designs our WEG Rolled Steel line is the perfect example of these efforts.

A product line with superior features that make a big difference for our customers.



Features that make a difference:

- Dual rated for 60 Hz and 50 Hz @ 190-220/380-415 V
- Optimized ventilation system for cooler operation
- Robust feet design for the toughest applications
- Frames 182/4T and larger have two eyebolts for easy mounting in any position
- Oversized diagonally split aluminum terminal box that exceeds IP55 requirements. (Ideal for easy installation and tough environments).
- Terminal box is rotatable in 90 degrees increments for easy installation
- AEGIS® ring inside (optional) to extend bearing life when used with VFDs
- IP55 ingress protection is standard
- Suitable for VFD operation per NEMA MG1 part 31.4.4.2
- Color coded leads for easy installation
- Motor paint resistance exceeds 500 hours of salt spray test

Please contact your authorized WEG distributor or go to **weg.net/us** for further information or additional specifications. **1-800-ASK-4WEG**

www.weg.net/us

Fractional Motors

Single-Phase TEFC & ODP

High Starting Torque makes these motors ideal for a wide range of applications.

Standard Features:

- Ball bearings
- Class B insulation



ODP



TEFC



Resilient Base

Features that make a difference:

- High Starting Torque
- TEFC motors are rated IP55 (gasketed conduit box and capacitor cover)

ADDITIONAL TECHNICAL DATA

ELECTRICAL DATA: **p. B-59; B-62**
MECHANICAL DATA: **p. C-51; C-55; C-57**

Fractional Motors

Three-Phase TEFC & ODP

High Starting Torque makes these motors ideal for a wide range of applications.

Standard Features:

- 50/60 Hz Rated
- Ball bearings
- Class B insulation (ODP)
- Class F insulation (TEFC)



ODP



TEFC



Resilient Base



ODP



TEFC



Resilient Base

Features that make a difference:

- Motors are suitable for VFD operation (TEFC)
- 50/60 Hz Rated
- Service Factor 1.15 or better
- TEFC rated IP55 (gasketed conduit box and capacitor cover)

Inverter Rated:
1000:1 for variable torque
5:1 for constant torque (TEFC Only)

ADDITIONAL TECHNICAL DATA

ELECTRICAL DATA: p. B-66; B-67
MECHANICAL DATA: p. C-37; C-55; C-57

SINGLE-PHASE



TEFC - Foot Mount

HP	kW	RPM	NEMA Frame	Catalog Number	List Price	Mult. Symbol	Approx. Shipping Weight (lbs)	Service Factor	FL Amps @ High	FL. Eff (%)	"C" Dimension (in)	Voltage (V)	Notes
0.25	0.18	3600	B56	.2536ES1BB56	257	F1	31	1.15	2.30	50.0	11.102	115/208-230	9
		1800	B56	.2518ES1BB56	267	F1	33	1.15	2.35	57.7	11.102	115/208-230	9
0.33	0.25	3600	B56	.3336ES1BB56	267	F1	36	1.15	2.85	53.0	11.102	115/208-230	9
		1800	B56	.3318ES1BB56	283	F1	36	1.15	2.80	61.0	11.102	115/208-230	9
		1800	B56	.3318ES1RFDB56	284	R1	23	1.15	2.80	61.0	11.102	115/230	4;9
0.5	0.37	3600	B56	.5036ES1BB56	284	F1	40	1.15	3.80	58.0	11.102	115/208-230	9
		3600	B56	.5036ES1BOLB56	316	F1	40	1.15	3.80	58.0	11.102	115/208-230	4;9
		1800	B56	.5018ES1BB56	312	F1	41	1.15	3.70	66.5	11.102	115/208-230	9
		1800	B56	.5018ES1RFDB56	308	R1	25	1.15	3.70	66.5	11.102	115/230	4;9
		1200	D56	.5012ES1BD56	512	F1	41	1.15	3.60	71.0	12.283	115/208-230	9
0.75	0.55	3600	B56	.7536ES1BB56	297	F1	41	1.15	5.20	64.0	11.102	115/208-230	9
		3600	B56	.7536ES1BOLB56	329	F1	41	1.15	5.20	64.0	11.102	115/208-230	4;9
		1800	B56	.7518ES1BB56	348	F1	46	1.15	5.30	68.5	11.102	115/208-230	9
		1800	B56	.7518ES1RFDB56	357	R1	28	1.15	5.30	68.5	11.102	115/230	4;9
		1200	F56H	.7512ES1BF56	648	F1	58	1.15	5.00	71.0	13.464	115/208-230	9
1	0.75	3600	D56	00136ES1BD56	376	F1	46	1.15	6.40	67.0	12.283	115/208-230	9
		3600	D56	00136ES1BOLD56	408	F1	46	1.15	6.40	67.0	12.283	115/208-230	4;9
		1800	D56	00118ES1BD56	401	F1	52	1.15	7.00	70.3	12.283	115/208-230	9
		1800	D56	00118ES1RFDD56	394	R1	36	1.15	7.00	70.3	12.283	115/230	4;9
1.5	1.1	3600	D56	00156ES1BD56	432	F1	56	1.15	8.55	70.0	12.283	115/208-230	9
		3600	D56	00156ES1BOLD56	463	F1	56	1.15	8.55	70.0	12.283	115/208-230	4;9
		1800	F56H	00158ES1BF56	456	F1	58	1.15	8.70	76.5	13.464	115/208-230	9
		1800	F56H	00158ES1RFDF56H	502	R1	51	1.15	8.70	76.5	13.464	115/230	4;9
2	1.5	3600	F56H	00236ES1BF56	561	F1	65	1.15	10.0	74.0	13.464	115/208-230	9
		3600	F56H	00236ES1BOLF56	592	F1	65	1.15	10.0	74.0	13.464	115/208-230	4;9
		1800	G56H	00218ES1RFDG56H	529	R1	55	1.15	10.5	78.1	13.858	115/230	4;9

Refer to electrical and mechanical data sections for additional technical information. Please refer to back cover for description of "NOTES"

For detailed specifications, data sheets, drawings and performance curves visit http://catalog.wegelectric.com

Data subject to change without notice.



TEFC – C-Face – Foot Mount

HP	kW	RPM	NEMA Frame	Catalog Number	List Price	Mult. Symbol	Approx. Shipping Weight (lbs)	Service Factor	FL Amps @ High	FL. Eff (%)	"C" Dimension (in)	Voltage (V)	Notes
0.25	0.18	3600	B56C	.2536ES1BB56C	280	F1	31	1.15	2.30	50.0	11.102	115/208-230	9
		1800	B56C	.2518ES1BB56C	288	F1	33	1.15	2.35	57.7	11.102	115/208-230	9
0.33	0.25	3600	B56C	.3336ES1BB56C	288	F1	36	1.15	2.85	53.0	11.102	115/208-230	9
		1800	B56C	.3318ES1BB56C	304	F1	36	1.15	2.80	61.0	11.102	115/208-230	9
0.5	0.37	3600	B56	.5036ES1BB56C	313	F1	40	1.15	3.80	58.0	11.102	115/208-230	9
		1800	B56C	.5018ES1BB56C	333	F1	41	1.15	3.70	66.5	11.102	115/208-230	9
		1200	D56C	.5012ES1BD56C	535	F1	41	1.15	3.60	71.0	12.283	115/208-230	9
0.75	0.55	3600	B56	.7536ES1BB56C	353	F1	41	1.15	5.20	64.0	11.102	115/208-230	9
		1800	B56	.7518ES1BB56C	370	F1	46	1.15	5.30	68.5	11.102	115/208-230	9
		1200	F56H	.7512ES1BF56C	669	F1	56	1.15	5.00	71.0	13.464	115/208-230	9
1	0.75	3600	D56	00136ES1BD56C	378	F1	46	1.15	6.40	67.0	12.283	115/208-230	9
		1800	D56	00118ES1BD56C	424	F1	52	1.15	7.00	70.3	12.283	115/208-230	9
1.5	1.1	3600	D56	00156ES1BD56C	454	F1	56	1.15	8.55	70.0	12.283	115/208-230	9
		1800	F56H	00158ES1BF56C	478	F1	58	1.15	8.70	76.5	13.464	115/208-230	9
2	1.5	3600	F56H	00236ES1BF56C	537	F1	65	1.15	10.0	74.0	13.464	115/208-230	9

TEFC – C-Face – Footless

HP	kW	RPM	NEMA Frame	Catalog Number	List Price	Mult. Symbol	Approx. Shipping Weight (lbs)	Service Factor	FL Amps @ High	FL. Eff (%)	"C" Dimension (in)	Voltage (V)	Notes
0.33	0.25	3600	B56C	.3336ES1BB56CFL	288	F1	36	1.15	2.85	53.0	11.102	115/208-230	9;20
		1800	B56C	.3318ES1BB56CFL	304	F1	36	1.15	2.80	61.0	11.102	115/208-230	9;20
0.5	0.37	3600	B56C	.5036ES1BB56CFL	313	F1	40	1.15	3.80	58.0	11.102	115/208-230	9;20
		1800	B56C	.5018ES1BB56CFL	333	F1	41	1.15	3.70	66.5	11.102	115/208-230	9;20
		1200	D56C	.5012ES1BD56CFL	535	F1	44	1.15	3.60	71.0	12.283	115/208-230	9;20
0.75	0.55	3600	B56C	.7536ES1BB56CFL	353	F1	41	1.15	5.20	64.0	11.102	115/208-230	9;20
		1800	B56C	.7518ES1BB56CFL	370	F1	46	1.15	5.30	68.5	11.102	115/208-230	9;20
		1200	F56C	.7512ES1BF56CFL	669	F1	56	1.15	5.00	71.0	13.464	115/208-230	9;20
1	0.75	3600	D56C	00136ES1BD56CFL	378	F1	46	1.15	6.40	67.0	12.283	115/208-230	9;20
		1800	D56C	00118ES1BD56CFL	424	F1	52	1.15	7.00	70.3	12.283	115/208-230	9;20
1.5	1.1	3600	D56C	00156ES1BD56CFL	454	F1	56	1.15	8.55	70.0	12.283	115/208-230	9;20
		1800	F56C	00158ES1BF56CFL	478	F1	58	1.15	8.70	76.5	13.464	115/208-230	9;20
2	1.5	3600	F56C	00236ES1BF56CFL	537	F1	65	1.15	10.0	74.0	13.464	115/208-230	9;20

Refer to electrical and mechanical data sections for additional technical information. Please refer to back cover for description of “NOTES”

For detailed specifications, data sheets, drawings and performance curves visit http://catalog.wegelectric.com

SINGLE-PHASE



TEFC – Foot Mount – Thermally Protected

HP	kW	RPM	NEMA Frame	Catalog Number	List Price	Mult. Symbol	Approx. Shipping Weight (lbs)	Service Factor	FL Amps @ High	FL. Eff (%)	"C" Dimension (in)	Voltage (V)	Notes
0.33	0.25	1800	B56	.3318ES1RFDB56	284	R1	23	1.15	2.80	61.0	11.102	115/230	4;9
0.5	0.37	3600	B56	.5036ES1BOLB56	316	F1	40	1.15	3.80	58.0	11.102	115/208-230	4;9
		1800	B56	.5018ES1RFDB56	308	R1	25	1.15	3.70	66.5	11.102	115/230	4;9
0.75	0.55	3600	B56	.7536ES1BOLB56	329	F1	41	1.15	5.20	64.0	11.102	115/208-230	4;9
		1800	B56	.7518ES1RFDB56	357	R1	28	1.15	5.30	68.5	11.102	115/230	4;9
1	0.75	3600	D56	00136ES1BOLD56	408	F1	46	1.15	6.40	67.0	12.283	115/208-230	4;9
		1800	D56	00118ES1RFDD56	394	R1	36	1.15	7.00	70.3	12.283	115/230	4;9
1.5	1.1	3600	D56	00156ES1BOLD56	463	F1	56	1.15	8.55	70.0	12.283	115/208-230	4;9
		1800	F56H	00158ES1RFDF56H	502	R1	51	1.15	8.70	76.5	13.464	115/230	4;9
2	1.5	3600	F56H	00236ES1BOLF56	592	F1	65	1.15	10.0	74.0	13.464	115/208-230	4;9
		1800	G56H	00218ES1RFDG56H	529	R1	55	1.15	10.5	78.1	13.858	115/230	4;9

Refer to electrical and mechanical data sections for additional technical information. Please refer to back cover for description of "NOTES"

For detailed specifications, data sheets, drawings and performance curves visit http://catalog.wegelectric.com

Data subject to change without notice.



ODP – Foot Mount

HP	kW	RPM	NEMA Frame	Catalog Number	List Price	Mult. Symbol	Approx. Shipping Weight (lbs)	Service Factor	FL Amps @ High	FL. Eff (%)	"C" Dimension (in)	Voltage (V)	Notes
0.12	0.09	1800	B48	.12180S1BB48	201	F1B	17	1.40	1.60	48.1	9.252	115/208-230	9
0.16	0.12	3600	B48	.16360S1BB48	216	F1B	17	1.35	1.55	49.9	9.252	115/208-230	9
		1800	B48	.16180S1BB48	208	F1B	17	1.35	1.85	50.3	9.252	115/208-230	9
		1800	B48	.16180S1BSPB48	224	F1B	19	1.35	1.90	49.9	9.252	115/208-230	9;16
0.25	0.18	3600	56	.25360S1B56	220	F1B	19	1.35	2.15	54.7	9.646	115/208-230	9
		3600	B48	.25360S1BB48	220	F1B	19	1.35	2.15	54.7	9.252	115/208-230	9
		1800	56	.25180S1B56	209	F1B	19	1.35	2.65	55.9	9.646	115/208-230	9
		1800	B48	.25180S1BB48	209	F1B	19	1.35	2.65	55.9	9.252	115/208-230	9
		1800	B48	.25180S1BRB0B48	274	F1B	22	1.35	2.40	59.5	10.632	115/208-230	3;9;13;16
		1800	B48	.25180S1BSPB48	240	F1B	20	1.35	2.40	59.5	9.252	115/208-230	9;16
0.33	0.25	3600	C48	.33360S1BC48	222	F1B	22	1.35	2.85	57.6	10.197	115/208-230	9
		3600	C56	.33360S1BC56	222	F1B	22	1.35	2.85	57.6	10.551	115/208-230	9
		1800	C48	.33180S1BC48	237	F1B	22	1.35	3.11	58.6	10.197	115/208-230	9
		1800	C56	.33180S1BC56	237	F1B	22	1.35	3.30	58.2	10.551	115/208-230	9
		1800	C48	.33180S1BRB0C48	284	F1B	26	1.35	3.13	60.0	10.039	115/208-230	3;9;13;16
		1800	C56	.33180S1BRB0C56	288	F1B	22	1.35	3.13	60.0	11.593	115/208-230	3;9;13;16
		1800	C48	.33180S1BSPC48	258	F1B	22	1.35	3.13	60.0	10.197	115/208-230	9;16
		1800	C56	.33180S1PRB0C56	288	F1B	22	1.35	2.58	58.6	11.593	277	3;9;13
0.5	0.37	3600	C48	.50360S1BC48	237	F1B	24	1.25	3.60	64.4	10.197	115/208-230	9
		3600	C56	.50360S1BC56	242	F1B	24	1.25	3.60	64.4	10.551	115/208-230	9
		3600	C56	.50360S1BCDC56	224	C1	24	1.00	3.30	63.0	10.551	115/208-230	1;4;6;9
		1800	C48	.50180S1BC48	273	F1B	24	1.25	4.25	61.7	10.197	115/208-230	9
		1800	C56	.50180S1BC56	264	F1B	24	1.25	4.25	61.7	10.551	115/208-230	9
		1800	C48	.50180S1BRB0C48	311	F1B	28	1.25	4.00	63.5	10.039	115/208-230	3;9;13;16
		1800	C56	.50180S1BRB0C56	316	F1B	24	1.25	4.00	63.5	11.593	115/208-230	3;9;13;16
		1800	C48	.50180S1BSPC48	279	F1B	24	1.25	4.00	63.5	10.197	115/208-230	9;16
		1800	C56	.50180S1PRB0C56	316	F1B	24	1.35	3.34	63.2	11.593	277	3;9;13
0.75	0.55	3600	B56	.75360S1BB56	274	F1B	32	1.25	5.25	67.2	11.102	115/208-230	9
		3600	C56	.75360S1BCDC56	237	C1	32	1.00	4.60	66.0	10.551	115/208-230	1;4;6;9
		1800	D56	.75180S1BCHRB56	379	F1B	36	1.25	5.40	66.7	12.992	115/208-230	3;9;13
		1800	D56	.75180S1BD56	328	F1B	36	1.25	5.40	66.7	12.283	115/208-230	9
		1800	D56	.75180S1BRB0D56	379	F1B	36	1.25	5.40	66.7	12.992	115/208-230	3;9;13
		1800	D56	.75180S1PRB0D56	379	F1B	36	1.25	4.48	66.7	12.992	277	3;9;13
1	0.75	3600	B56	001360S1BCDB56	278	C1	36	1.00	6.10	67.0	11.102	115/208-230	1;4;6;9
		3600	D56	001360S1BD56	296	F1B	36	1.25	6.80	66.3	12.283	115/208-230	9
		1800	D56	001180S1BD56	355	F1B	39	1.15	7.00	71.4	12.283	115/208-230	9
		1800	D56	001180S1BRB0D56	408	F1B	39	1.15	7.00	71.4	12.992	115/208-230	3;9;13
		1800	D56	001180S1PRB0D56	408	F1B	39	1.15	5.81	71.4	12.992	277	3;9;13

Continued on next page

Refer to electrical and mechanical data sections for additional technical information. Please refer to back cover for description of "NOTES"

For detailed specifications, data sheets, drawings and performance curves visit http://catalog.wegelectric.com

SINGLE-PHASE

ODP – Foot Mount *continued*



HP	kW	RPM	NEMA Frame	Catalog Number	List Price	Mult. Symbol	Approx. Shipping Weight (lbs)	Service Factor	FL Amps @ High	FL. Eff (%)	"C" Dimension (in)	Voltage (V)	Notes
1.5	1.1	3600	D56	00156OS1BCDD56	311	C1	40	1.00	8.40	68.0	12.283	115/208-230	1;4;6;9
		3600	D56	00156OS1BD56	333	F1B	40	1.15	8.90	70.0	12.283	115/208-230	9
		3600	D56	00156OS1BRBOD56	386	F1B	40	1.15	8.90	70.0	12.992	115/208-230	3;9;13
		1800	F56H	00158OS1BCH56H	438	F1B	37	1.15	10.2	71.3	13.464	115/208-230	9
		1800	F56H	00158OS1BF56	438	F1B	37	1.15	10.2	71.3	13.464	115/208-230	9
		1800	F56H	00158OS1BOF56	439	F1B	51	1.15	10.2	71.3	13.464	115/208-230	3;9
		1800	D56	00158OS1BRBOD56	491	F1B	37	1.15	9.70	73.0	12.992	115/208-230	3;9;13
2	1.5	3600	D56	00236OS1BCDD56	372	C1	41	1.00	11.0	70.0	12.283	115/208-230	1;4;6;9
		3600	F56H	00236OS1BF56	409	F1B	41	1.15	11.0	77.9	13.464	115/208-230	9
		1800	G56H	00218OS1BG56	522	F1B	46	1.00	14.0	71.4	13.858	115/208-230	1;9
3	2.2	3600	F56H	00336OS1BCDF56	432	C1	44	1.00	14.7	77.0	13.464	115/208-230	1;4;6;9
		3600	G56H	00336OS1BG56	475	F1B	44	1.00	15.5	78.0	13.858	115/208-230	1;9
4	3.0	3600	G56HZ	00436OS1DCDG56HZ	453	C1	47	1.15	16.5	82.5	14.234	230	4;5;6;9
5	3.7	3600	G56H	00536OS1CCDG56	458	C1	52	1.00	19.0	85.0	13.858	208-230	1;4;6;9
		3600	G56HZ	00536OS1CCDG56HZ	481	C1	52	1.00	19.0	85.0	14.234	208-230	1;4;5;6;9

Refer to electrical and mechanical data sections for additional technical information. Please refer to back cover for description of "NOTES"

For detailed specifications, data sheets, drawings and performance curves visit http://catalog.wegelectric.com

Data subject to change without notice.



ODP – Resilient Base

HP	kW	RPM	NEMA Frame	Catalog Number	List Price	Mult. Symbol	Approx. Shipping Weight (lbs)	Service Factor	FL Amps @ High	FL. Eff (%)	"C" Dimension (in)	Voltage (V)	Notes
0.25	0.18	1800	B48	.25180S1BRB0B48	274	F1B	22	1.35	2.40	59.5	10.632	115/208-230	3;9;13;16
0.33	0.25	1800	C48	.33180S1BRB0C48	284	F1B	26	1.35	3.13	60.0	10.039	115/208-230	3;9;13;16
		1800	C56	.33180S1BRB0C56	288	F1B	22	1.35	3.13	60.0	11.593	115/208-230	3;9;13;16
		1800	C56	.33180S1PRB0C56	288	F1B	22	1.35	2.58	58.6	11.593	277	3;9;13
0.5	0.37	1800	C48	.50180S1BRB0C48	311	F1B	28	1.25	4.00	63.5	10.039	115/208-230	3;9;13;16
		1800	C56	.50180S1BRB0C56	316	F1B	24	1.25	4.00	63.5	11.593	115/208-230	3;9;13;16
		1800	C56	.50180S1PRB0C56	316	F1B	24	1.35	3.34	63.2	11.593	277	3;9;13
0.75	0.55	1800	D56	.75180S1BCHRB56	379	F1B	36	1.25	5.40	66.7	12.992	115/208-230	3;9;13
		1800	D56	.75180S1BRB0D56	379	F1B	36	1.25	5.40	66.7	12.992	115/208-230	3;9;13
		1800	D56	.75180S1PRB0D56	379	F1B	36	1.25	4.48	66.7	12.992	277	3;9;13
1	0.75	1800	D56	00118OS1BRB0D56	408	F1B	39	1.15	7.00	71.4	12.992	115/208-230	3;9;13
		1800	D56	00118OS1PRB0D56	408	F1B	39	1.15	5.81	71.4	12.992	277	3;9;13
1.5	1.1	3600	D56	00156OS1BRB0D56	386	F1B	40	1.15	8.90	70.0	12.992	115/208-230	3;9;13
		1800	D56	00158OS1BRB0D56	491	F1B	37	1.15	9.70	73.0	12.992	115/208-230	3;9;13

Refer to electrical and mechanical data sections for additional technical information. Please refer to back cover for description of “NOTES”

For detailed specifications, data sheets, drawings and performance curves visit http://catalog.wegelectric.com

SINGLE-PHASE



ODP – C-Face – Foot Mount

HP	kW	RPM	NEMA Frame	Catalog Number	List Price	Mult. Symbol	Approx. Shipping Weight (lbs)	Service Factor	FL Amps @ High	FL. Eff (%)	"C" Dimension (in)	Voltage (V)	Notes
0.12	0.09	1800	B48C	.12180S1BB48C	222	F1B	17	1.40	1.60	48.1	9.252	115/208-230	9
0.16	0.12	3600	B48C	.16360S1BB48C	237	F1B	17	1.35	1.55	49.9	9.252	115/208-230	9
		1800	B48C	.16180S1BB48C	231	F1B	17	1.35	1.85	50.3	9.252	115/208-230	9
		1800	B48C	.16180S1BSPB48C	247	F1B	19	1.35	1.90	49.9	9.252	115/208-230	9;16
0.25	0.18	3600	56C	.25360S1B56C	241	F1B	19	1.35	2.15	54.7	9.646	115/208-230	9
		3600	B48C	.25360S1BB48C	241	F1B	19	1.35	2.15	54.7	9.252	115/208-230	9
		1800	56C	.25180S1B56C	233	F1B	19	1.35	2.65	55.9	9.646	115/208-230	9
		1800	B48C	.25180S1BB48C	233	F1B	19	1.35	2.65	55.9	9.252	115/208-230	9
		1800	B48C	.25180S1BSPB48C	263	F1B	20	1.35	2.40	59.5	9.252	115/208-230	9;16
0.33	0.25	3600	C48C	.33360S1BC48C	244	F1B	22	1.35	2.85	57.6	10.197	115/208-230	9
		3600	C56C	.33360S1BC56C	244	F1B	22	1.35	2.85	57.6	10.551	115/208-230	9
		1800	C48C	.33180S1BC48C	258	F1B	22	1.35	3.11	58.6	10.197	115/208-230	9
		1800	C56C	.33180S1BC56C	258	F1B	22	1.35	3.30	58.2	10.551	115/208-230	9
		1800	C48C	.33180S1BSPC48C	282	F1B	22	1.35	3.13	60.0	10.197	115/208-230	9;16
0.5	0.37	3600	C48C	.50360S1BC48C	258	F1B	24	1.25	3.60	64.4	10.197	115/208-230	9
		3600	C56C	.50360S1BC56C	266	F1B	24	1.25	3.60	64.4	10.551	115/208-230	9
		1800	C48CH	.50180S1BC48CH	296	F1B	24	1.25	4.25	61.7	10.197	115/208-230	9
		1800	C56C	.50180S1BC56C	286	F1B	24	1.25	4.25	61.7	10.551	115/208-230	9
		1800	C48C	.50180S1BSPC48C	300	F1B	24	1.25	4.00	63.5	10.197	115/208-230	9;16
0.75	0.55	3600	B56C	.75360S1BB56C	297	F1B	32	1.25	5.25	67.2	11.102	115/208-230	9
		1800	D56C	.75180S1BD56C	349	F1B	36	1.25	5.40	66.7	12.283	115/208-230	9
1	0.75	3600	D56C	00136OS1BD56C	317	F1B	36	1.25	6.80	66.3	12.283	115/208-230	9
		1800	D56C	00118OS1BD56C	378	F1B	39	1.15	7.00	71.4	12.283	115/208-230	9
1.5	1.1	3600	D56C	00156OS1BD56C	355	F1B	40	1.15	8.90	70.0	12.283	115/208-230	9
		1800	F56HC	00158OS1BF56C	461	F1B	37	1.15	10.2	71.3	13.464	115/208-230	9
2	1.5	3600	F56HC	00236OS1BF56C	432	F1B	41	1.15	11.0	77.9	13.464	115/208-230	9
		1800	G56HC	00218OS1BG56C	544	F1B	43	1.00	14.0	71.4	13.858	115/208-230	1;9
3	2.2	3600	G56HC	00336OS1BG56C	496	F1B	44	1.00	15.5	78.0	13.858	115/208-230	1;9

Refer to electrical and mechanical data sections for additional technical information. Please refer to back cover for description of "NOTES"

For detailed specifications, data sheets, drawings and performance curves visit http://catalog.wegelectric.com

Data subject to change without notice.

ODP – C-Face – Footless

HP	kW	RPM	NEMA Frame	Catalog Number	List Price	Mult. Symbol	Approx. Shipping Weight (lbs)	Service Factor	FL Amps @ High	FL. Eff (%)	"C" Dimension (in)	Voltage (V)	Notes
0.33	0.25	3600	C56C	.3336OS1BC56CFL	244	F1B	22	1.35	2.85	57.6	10.551	115/208-230	9;20
		1800	C56C	.3318OS1BC56CFL	258	F1B	22	1.35	3.30	58.2	10.551	115/208-230	9;20
0.5	0.37	3600	C56C	.5036OS1BC56CFL	266	F1B	24	1.25	3.60	64.4	10.551	115/208-230	9;20
		1800	C56C	.5018OS1BC56CFL	286	F1B	24	1.25	4.25	61.7	10.551	115/208-230	9;20
0.75	0.55	3600	B56C	.7536OS1BB56CFL	297	F1B	32	1.25	5.25	67.2	11.102	115/208-230	9;20
		1800	D56C	.7518OS1BD56CFL	349	F1B	36	1.25	5.40	66.7	12.283	115/208-230	9;20
1	0.75	3600	D56C	00136OS1BD56CFL	317	F1B	36	1.25	6.80	66.3	12.283	115/208-230	9;20
		1800	D56C	00118OS1BD56CFL	378	F1B	39	1.15	7.00	71.4	12.283	115/208-230	9;20
1.5	1.1	3600	D56C	00156OS1BD56CFL	355	F1B	40	1.15	8.90	70.0	12.283	115/208-230	9;20
		1800	F56C	00158OS1BF56CFL	461	F1B	37	1.15	10.2	71.3	13.464	115/208-230	9;20
2	1.5	3600	F56C	00236OS1BF56CFL	432	F1B	41	1.15	11.0	77.9	13.464	115/208-230	9;20
		1800	G56C	00218OS1BG56CFL	544	F1B	43	1.00	14.0	71.4	13.858	115/208-230	1;9;20
3	2.2	3600	G56C	00336OS1BG56CFL	496	F1B	44	1.00	15.5	78.0	13.858	115/208-230	1;9;20

Refer to electrical and mechanical data sections for additional technical information. Please refer to back cover for description of “NOTES”

For detailed specifications, data sheets, drawings and performance curves visit http://catalog.wegelectric.com

SINGLE-PHASE



ODP – Foot Mount – Thermally Protected

HP	kW	RPM	NEMA Frame	Catalog Number	List Price	Mult. Symbol	Approx. Shipping Weight (lbs)	Service Factor	FL Amps @ High	FL. Eff (%)	"C" Dimension (in)	Voltage (V)	Notes
0.5	0.37	3600	C56	.5036OS1BCDC56	224	C1	24	1.00	3.30	63.0	10.551	115/208-230	1;4;6;9
0.75	0.55	3600	C56	.7536OS1BCDC56	237	C1	32	1.00	4.60	66.0	10.551	115/208-230	1;4;6;9
1	0.75	3600	B56	00136OS1BCDB56	278	C1	36	1.00	6.10	67.0	11.102	115/208-230	1;4;6;9
1.5	1.1	3600	D56	00156OS1BCDD56	311	C1	40	1.00	8.40	68.0	12.283	115/208-230	1;4;6;9
		1800	F56H	00158OS1BOF56	439	F1B	51	1.15	10.2	71.3	13.464	115/208-230	3;9
2	1.5	3600	D56	00236OS1BCDD56	372	C1	41	1.00	11.0	70.0	12.283	115/208-230	1;4;6;9
3	2.2	3600	F56H	00336OS1BCDF56	432	C1	44	1.00	14.7	77.0	13.464	115/208-230	1;4;6;9
4	3.0	3600	G56HZ	00436OS1DCDG56HZ	453	C1	47	1.15	16.5	82.5	14.234	230	4;5;6;9
5	3.7	3600	G56H	00536OS1CCDG56	458	C1	52	1.00	19.0	85.0	13.858	208-230	1;4;6;9
		3600	G56HZ	00536OS1CCDG56HZ	481	C1	52	1.00	19.0	85.0	14.234	208-230	1;4;5;6;9

Refer to electrical and mechanical data sections for additional technical information. Please refer to back cover for description of “NOTES”

For detailed specifications, data sheets, drawings and performance curves visit http://catalog.wegelectric.com

Data subject to change without notice.



TEFC – Foot Mount

HP	kW	RPM	NEMA Frame	Catalog Number	List Price	Mult. Symbol	Approx. Shipping Weight (lbs)	Service Factor	FL Amps @ High	FL. Eff (%)	"C" Dimension (in)	Voltage (V)	Notes
0.25	0.18	3600	56	.2536ES3E56-S	237	F1	22	1.15	0.46	57.5	11.142	208-230/460	9
		3600	B56	.2536ES3EB56	237	F1	31	1.15	0.45	62.0	11.102	208-230/460	9
		1800	56	.2518ES3E56-S	249	F1	23	1.15	0.52	70	11.146	208-230/460	9
		1800	B56	.2518ES3EB56	249	F1	31	1.15	0.50	70.0	11.102	208-230/460	9
0.33	0.25	3600	56	.3336ES3E56-S	249	F1	22	1.15	0.60	62	11.142	208-230/460	9
		3600	B56	.3336ES3EB56	249	F1	33	1.15	0.60	66.0	11.102	208-230/460	9
		1800	56	.3318ES3E56-S	253	F1	24	1.15	0.62	74	11.535	208-230/460	9
		1800	B56	.3318ES3EB56	253	F1	33	1.15	0.55	75.5	11.102	208-230/460	9
0.5	0.37	3600	56	.5036ES3E56-S	258	F1	24	1.15	0.84	68	11.539	208-230/460	9
		3600	B56	.5036ES3EB56	258	F1	36	1.15	0.83	72.0	11.102	208-230/460	9
		1800	56	.5018ES3E56-S	287	F1	26	1.15	0.86	77	11.539	208-230/460	9
		1800	B56	.5018ES3EB56	287	F1	34	1.15	1.65	78.0	11.102	208-230/460	9
		1800	56	.5018ES3H56-S	288	F1	26	1.15	0.69	77	11.539	575	9
		1800	B56	.5018ES3HB56	287	F1	34	1.15	1.32	78.0	11.102	575	9
		1200	56	.5012ES3E56-S	417	F1	30	1.15	0.99	72	12.323	208-230/460	9
		1200	B56	.5012ES3EB56	417	F1	36	1.15	1.30	70.0	11.102	208-230/460	9
0.75	0.55	3600	56	.7536ES3E56-S	287	F1	25	1.15	1.13	72	11.535	208-230/460	9
		3600	B56	.7536ES3EB56	287	F1	40	1.15	1.10	77.0	11.102	208-230/460	9
		3600	56	.7536ES3H56-S	288	F1	25	1.15	0.90	72	11.535	575	9
		3600	B56	.7536ES3HB56	287	F1	40	1.15	0.88	77.0	11.102	575	9
		1800	56H	.7518ES3E56-S	311	F1	27	1.15	1.22	78.5	11.929	208-230/460	9
		1800	B56	.7518ES3EB56	311	F1	40	1.15	1.12	80.0	11.102	208-230/460	9
		1200	56H	.7512ES3E56-S	427	F1	34	1.15	1.34	75.5	12.72	208-230/460	9
		1200	D56	.7512ES3ED56	427	F1	40	1.15	1.48	81.5	12.283	208-230/460	9
1	0.75	3600	56	00136ES3E56-S	338	F1	28	1.15	1.51	74	11.933	208-230/460	9
		3600	B56	00136ES3EB56	338	F1	44	1.15	1.40	80.0	11.102	208-230/460	9
		3600	56	00136ES3H56-S	338	F1	28	1.15	1.21	74	11.933	575	9
		3600	B56	00136ES3HB56	338	F1	44	1.15	1.12	80.0	11.102	575	9
		1800	56	00118ES3E56-S	321	F1	32	1.15	1.66	80	12.323	208-230/460	9
		1800	D56	00118ES3ED56	321	F1	46	1.15	1.55	80.5	12.283	208-230/460	9
		1800	56	00118ES3H56-S	322	F1	32	1.15	1.33	80	12.323	575	9
		1800	D56	00118ES3HD56	321	F1	46	1.15	1.24	80.5	12.283	575	9
		1200	56H	00112ES3E56-S	432	F1	39	1.15	1.67	77	13.504	208-230/460	9
		1200	F56H	00112ES3EF56	432	F1	46	1.15	1.83	81.5	13.464	208-230/460	9
1.5	1.1	3600	56	00156ES3E56-S	370	F1	31	1.15	1.99	77	12.323	208-230/460	9
		3600	B56	00156ES3EB56	370	F1	48	1.15	1.96	82.5	11.102	208-230/460	9
		1800	56H	00158ES3E56-S	362	F1	36	1.15	2.23	81.5	13.11	208-230/460	9
		1800	D56	00158ES3ED56	362	F1	52	1.15	2.30	80.0	12.283	208-230/460	9

Continued on next page

Refer to electrical and mechanical data sections for additional technical information. Please refer to back cover for description of “NOTES”

For detailed specifications, data sheets, drawings and performance curves visit http://catalog.wegelectric.com

Data subject to change without notice.

THREE-PHASE

TEFC – Foot Mount *continued*

HP	kW	RPM	NEMA Frame	Catalog Number	List Price	Mult. Symbol	Approx. Shipping Weight (lbs)	Service Factor	FL Amps @ High	FL. Eff (%)	"C" Dimension (in)	Voltage (V)	Notes
2	1.5	3600	56H	00236ES3E56-S	414	F1	36	1.15	2.57	81.5	13.114	208-230/460	9
		3600	D56	00236ES3ED56	414	F1	58	1.15	2.58	82.5	12.283	208-230/460	9
		1800	56H	00218ES3E56-S	392	F1	41	1.15	2.85	82.5	13.504	208-230/460	9
		1800	F56H	00218ES3EF56	392	F1	61	1.15	2.90	82.0	13.464	208-230/460	9
3	2.2	3600	56H	00336ES3E56-S	484	F1	43	1.15	3.76	81.5	13.898	208-230/460	9
		3600	F56H	00336ES3EF56	484	F1	67	1.15	3.80	84.0	13.464	208-230/460	9

Refer to electrical and mechanical data sections for additional technical information. Please refer to back cover for description of “NOTES”

For detailed specifications, data sheets, drawings and performance curves visit http://catalog.wegelectric.com

Data subject to change without notice.





TEFC – C-Face – Foot Mount

HP	kW	RPM	NEMA Frame	Catalog Number	List Price	Mult. Symbol	Approx. Shipping Weight (lbs)	Service Factor	FL Amps @ High	FL. Eff (%)	"C" Dimension (in)	Voltage (V)	Notes
0.25	0.18	3600	56C	.2536ES3E56C-S	258	F1	22	1.15	0.46	57.5	11.142	208-230/460	9
		3600	B56C	.2536ES3EB56C	258	F1	31	1.15	0.45	62.0	11.102	208-230/460	9
		1800	56C	.2518ES3E56C-S	270	F1	23	1.15	0.52	70	11.146	208-230/460	9
		1800	B56C	.2518ES3EB56C	270	F1	31	1.15	0.50	70.0	11.102	208-230/460	9
		1800	56C	.2518ES3H56C-S	270	F1	23	1.15	0.42	70	11.146	575	9
		1800	B56C	.2518ES3HB56C	270	F1	31	1.15	0.40	70.0	11.102	575	9
0.33	0.25	3600	56C	.3336ES3E56C-S	270	F1	22	1.15	0.60	62	11.142	208-230/460	9
		3600	B56C	.3336ES3EB56C	270	F1	33	1.15	0.60	66.0	11.102	208-230/460	9
		3600	56C	.3336ES3H56C-S	270	F1	22	1.15	0.48	62	11.142	575	9
		3600	B56C	.3336ES3HB56C	270	F1	33	1.15	0.48	66.0	11.102	575	9
		1800	56C	.3318ES3E56C-S	274	F1	24	1.15	0.62	74	11.535	208-230/460	9
		1800	B56C	.3318ES3EB56C	274	F1	33	1.15	0.55	75.5	11.102	208-230/460	9
0.5	0.37	3600	56C	.5036ES3E56C-S	282	F1	24	1.15	0.84	68	11.539	208-230/460	9
		3600	B56C	.5036ES3EB56C	282	F1	36	1.15	0.83	72.0	11.102	208-230/460	9
		3600	56C	.5036ES3H56C-S	281	F1	24	1.15	0.67	68	11.539	575	9
		3600	B56C	.5036ES3HB56C	282	F1	36	1.15	0.66	72.0	11.102	575	9
		1800	56C	.5018ES3E56C-S	311	F1	26	1.15	0.86	77	11.539	208-230/460	9
		1800	B56C	.5018ES3EB56C	311	F1	34	1.15	1.65	78.0	11.102	208-230/460	9
		1800	56C	.5018ES3H56C-S	263	F1	26	1.15	0.69	77	11.539	575	9
		1800	B56C	.5018ES3HB56C	311	F1	34	1.15	1.32	78.0	11.102	575	9
		1200	56C	.5012ES3E56C-S	440	F1	30	1.15	0.99	72	12.323	208-230/460	9
		1200	B56C	.5012ES3EB56C	440	F1	36	1.15	1.30	70.0	11.102	208-230/460	9
0.75	0.55	3600	56C	.7536ES3E56C-S	311	F1	25	1.15	1.13	72	11.535	208-230/460	9
		3600	B56C	.7536ES3EB56C	311	F1	40	1.15	1.10	77.0	11.102	208-230/460	9
		3600	56C	.7536ES3H56C-S	310	F1	25	1.15	0.90	72	11.535	575	9
		3600	B56C	.7536ES3HB56C	311	F1	40	1.15	0.88	77.0	11.102	575	9
		1800	56C	.7518ES3E56C-S	332	F1	27	1.15	1.22	78.5	11.929	208-230/460	9
		1800	B56C	.7518ES3EB56C	332	F1	40	1.15	1.12	80.0	11.102	208-230/460	9
		1800	56C	.7518ES3H56C-S	333	F1	27	1.15	0.98	78.5	11.929	575	9
		1800	B56C	.7518ES3HB56C	332	F1	40	1.15	0.90	80.0	11.102	575	9
		1200	56HC	.7512ES3E56C-S	449	F1	34	1.15	1.34	75.5	12.72	208-230/460	9
		1200	D56C	.7512ES3ED56C	449	F1	40	1.15	1.48	81.5	12.283	208-230/460	9

Continued on next page

Refer to electrical and mechanical data sections for additional technical information. Please refer to back cover for description of “NOTES”

For detailed specifications, data sheets, drawings and performance curves visit http://catalog.wegelectric.com



TEFC – C-Face – Foot Mount *continued*

HP	kW	RPM	NEMA Frame	Catalog Number	List Price	Mult. Symbol	Approx. Shipping Weight (lbs)	Service Factor	FL Amps @ High	FL. Eff (%)	"C" Dimension (in)	Voltage (V)	Notes
1	0.75	3600	56C	00136ES3E56C-S	361	F1	28	1.15	1.51	74	11.933	208-230/460	9
		3600	B56C	00136ES3EB56C	361	F1	44	1.15	1.40	80.0	11.102	208-230/460	9
		3600	56C	00136ES3H56C-S	361	F1	28	1.15	1.21	74	11.933	575	9
		3600	B56C	00136ES3HB56C	361	F1	44	1.15	1.12	80.0	11.102	575	9
		1800	56C	00118ES3E56C-S	345	F1	32	1.15	1.66	80	12.323	208-230/460	9
		1800	D56C	00118ES3ED56C	345	F1	46	1.15	1.55	80.5	12.283	208-230/460	9
		1800	56C	00118ES3H56C-S	346	F1	32	1.15	1.33	80	12.323	575	9
		1800	D56C	00118ES3HD56C	345	F1	46	1.15	1.24	80.5	12.283	575	9
		1200	56HC	00112ES3E56C-S	454	F1	39	1.15	1.67	77	13.504	208-230/460	9
		1200	F56HC	00112ES3EF56C	454	F1	46	1.15	1.83	81.5	13.464	208-230/460	9
1.5	1.1	3600	56C	00156ES3E56C-S	392	F1	31	1.15	1.99	77	12.323	208-230/460	9
		3600	B56C	00156ES3EB56C	392	F1	48	1.15	1.96	82.5	11.102	208-230/460	9
		3600	56C	00156ES3H56C-S	356	F1	31	1.15	1.59	77	12.323	575	9
		3600	B56C	00156ES3HB56C	392	F1	48	1.15	1.57	82.5	11.102	575	9
		1800	56HC	00158ES3E56C-S	384	F1	36	1.15	2.23	81.5	13.11	208-230/460	9
		1800	D56C	00158ES3ED56C	384	F1	52	1.15	2.30	80.0	12.283	208-230/460	9
		1800	56HC	00158ES3H56C-S	384	F1	36	1.15	1.78	81.5	13.11	575	9
		1800	D56C	00158ES3HD56C	384	F1	52	1.15	1.84	80.0	12.283	575	9
2	1.5	3600	56HC	00236ES3E56C-S	437	F1	36	1.15	2.57	81.5	13.114	208-230/460	9
		3600	D56C	00236ES3ED56C	437	F1	58	1.15	2.58	82.5	12.283	208-230/460	9
		3600	56HC	00236ES3H56C-S	438	F1	36	1.15	2.06	81.5	13.114	575	9
		3600	D56C	00236ES3HD56C	437	F1	58	1.15	2.06	82.5	12.283	575	9
		1800	56HC	00218ES3E56C-S	414	F1	41	1.15	2.85	82.5	13.504	208-230/460	9
		1800	F56HC	00218ES3EF56C	414	F1	61	1.15	2.90	82.0	13.464	208-230/460	9
3	2.2	3600	56HC	00336ES3E56C-S	507	F1	43	1.15	3.76	81.5	13.898	208-230/460	9
		3600	F56HC	00336ES3EF56C	507	F1	67	1.15	3.80	84.0	13.464	208-230/460	9
		3600	56HC	00336ES3H56C-S	506	F1	43	1.15	3.01	81.5	13.898	575	9
		3600	F56C	00336ES3HF56C	507	F1	67	1.15	3.04	84.0	13.464	575	9

Refer to electrical and mechanical data sections for additional technical information. Please refer to back cover for description of "NOTES"

For detailed specifications, data sheets, drawings and performance curves visit http://catalog.wegelectric.com

Data subject to change without notice.

TEFC – C-Face – Footless

HP	kW	RPM	NEMA Frame	Catalog Number	List Price	Mult. Symbol	Approx. Shipping Weight (lbs)	Service Factor	FL Amps @ High	FL. Eff (%)	"C" Dimension (in)	Voltage (V)	Notes
0.33	0.25	3600	56C	.3336ES3E56CFL-S	270	F1	22	1.15	0.60	62	11.142	208-230/460	9;20
		3600	B56C	.3336ES3EB56CFL	270	F1	33	1.15	0.60	66.0	11.102	208-230/460	9;20
		3600	56C	.3336ES3H56CFL-S	270	F1	22	1.15	0.48	62	11.142	575	9;20
		3600	B56C	.3336ES3HB56CFL	270	F1	33	1.15	0.48	66.0	11.102	575	9;20
		1800	56C	.3318ES3E56CFL-S	274	F1	24	1.15	0.62	74	11.535	208-230/460	9;20
		1800	B56C	.3318ES3EB56CFL	274	F1	33	1.15	0.55	75.5	11.102	208-230/460	9;20
0.5	0.37	3600	56C	.5036ES3E56CFL-S	282	F1	24	1.15	0.84	68	11.539	208-230/460	9;20
		3600	B56C	.5036ES3EB56CFL	282	F1	36	1.15	0.83	72.0	11.102	208-230/460	9;20
		1800	56C	.5018ES3E56CFL-S	311	F1	26	1.15	0.86	77	11.539	208-230/460	9;20
		1800	B56C	.5018ES3EB56CFL	311	F1	34	1.15	1.65	78.0	11.102	208-230/460	9;20
		1800	56C	.5018ES3H56CFL-S	281	F1	26	1.15	0.69	77	11.539	575	9;20
		1800	B56C	.5018ES3HB56CFL	311	F1	34	1.15	1.32	78.0	11.102	575	9;20
		1200	56C	.5012ES3E56CFL-S	440	F1	30	1.15	0.99	72	12.323	208-230/460	9;20
		1200	B56C	.5012ES3EB56CFL	440	F1	36	1.15	1.30	70.0	11.102	208-230/460	9;20
		1200	56C	.5012ES3H56CFL-S	441	F1	30	1.15	0.79	72	12.323	575	9;20
		1200	B56C	.5012ES3HB56CFL	440	F1	36	1.15	1.04	70.0	11.102	575	9;20
0.75	0.55	3600	56C	.7536ES3E56CFL-S	311	F1	25	1.15	1.13	72	11.535	208-230/460	9;20
		3600	B56C	.7536ES3EB56CFL	311	F1	40	1.15	1.10	77.0	11.102	208-230/460	9;20
		3600	56C	.7536ES3H56CFL-S	310	F1	25	1.15	0.90	72	11.535	575	9;20
		3600	B56C	.7536ES3HB56CFL	311	F1	40	1.15	0.88	77.0	11.102	575	9;20
		1800	56C	.7518ES3E56CFL-S	332	F1	27	1.15	1.22	78.5	11.929	208-230/460	9;20
		1800	B56C	.7518ES3EB56CFL	332	F1	40	1.15	1.12	80.0	11.102	208-230/460	9;20
		1800	56C	.7518ES3H56CFL-S	333	F1	27	1.15	0.98	78.5	11.929	575	9;20
		1800	B56C	.7518ES3HB56CFL	332	F1	40	1.15	0.90	80.0	11.102	575	9;20
		1200	56HC	.7512ES3E56CFL-S	449	F1	34	1.15	1.34	75.5	12.72	208-230/460	9;20
		1200	D56C	.7512ES3ED56CFL	449	F1	40	1.15	1.48	81.5	12.283	208-230/460	9;20
		1200	56HC	.7512ES3H56CFL-S	448	F1	34	1.15	1.07	75.5	12.72	575	9;20
		1200	D56C	.7512ES3HD56CFL	449	F1	40	1.15	1.18	81.5	12.283	575	9;20
1	0.75	3600	56C	00136ES3E56CFL-S	361	F1	28	1.15	1.51	74	11.933	208-230/460	9;20
		3600	B56C	00136ES3EB56CFL	361	F1	44	1.15	1.40	80.0	11.102	208-230/460	9;20
		1800	56C	00118ES3E56CFL-S	345	F1	32	1.15	1.66	80	12.323	208-230/460	9;20
		1800	D56C	00118ES3ED56CFL	345	F1	46	1.15	1.55	80.5	12.283	208-230/460	9;20
		1800	56C	00118ES3H56CFL-S	343	F1	32	1.15	1.33	80	12.323	575	9;20
		1800	D56C	00118ES3HD56CFL	345	F1	46	1.15	1.24	80.5	12.283	575	9;20
		1200	56C	00112ES3E56CFL-S	454	F1	39	1.15	1.67	77	13.504	208-230/460	9;20
		1200	F56C	00112ES3EF56CFL	454	F1	46	1.15	1.83	81.5	13.464	208-230/460	9;20
		1200	56HC	00112ES3H56CFL-S	454	F1	39	1.15	1.34	77	13.504	575	9;20
		1200	F56C	00112ES3HF56CFL	454	F1	46	1.15	1.46	81.5	13.464	575	9;20

Continued on next page

Refer to electrical and mechanical data sections for additional technical information. Please refer to back cover for description of "NOTES"

For detailed specifications, data sheets, drawings and performance curves visit http://catalog.wegelectric.com

THREE-PHASE

TEFC – C-Face – Footless *continued*

HP	kW	RPM	NEMA Frame	Catalog Number	List Price	Mult. Symbol	Approx. Shipping Weight (lbs)	Service Factor	FL Amps @ High	FL. Eff (%)	"C" Dimension (in)	Voltage (V)	Notes
1.5	1.1	3600	56C	00156ES3E56CFL-S	392	F1	31	1.15	1.99	77	12.323	208-230/460	9;20
		3600	B56C	00156ES3EB56CFL	392	F1	48	1.15	1.96	82.5	11.102	208-230/460	9;20
		1800	56HC	00158ES3E56CFL-S	384	F1	36	1.15	2.23	81.5	13.11	208-230/460	9;20
		1800	D56C	00158ES3ED56CFL	384	F1	52	1.15	2.30	80.0	12.283	208-230/460	9;20
2	1.5	3600	56HC	00236ES3E56CFL-S	437	F1	36	1.15	2.57	81.5	13.114	208-230/460	9;20
		3600	D56C	00236ES3ED56CFL	437	F1	58	1.15	2.58	82.5	12.283	208-230/460	9;20
		1800	56HC	00218ES3E56CFL-S	414	F1	41	1.15	2.85	82.5	13.504	208-230/460	9;20
		1800	F56C	00218ES3EF56CFL	414	F1	61	1.15	2.90	82.0	13.464	208-230/460	9;20
3	2.2	3600	56HC	00336ES3E56CFL-S	507	F1	43	1.15	3.76	81.5	13.898	208-230/460	9;20
		3600	F56C	00336ES3EF56CFL	507	F1	67	1.15	3.80	84.0	13.464	208-230/460	9;20
		3600	56HC	00336ES3H56CFL-S	506	F1	43	1.15	3.01	81.5	13.898	575	9;20
		3600	F56C	00336ES3HF56CFL	507	F1	67	1.15	3.04	84.0	13.464	575	9;20

Refer to electrical and mechanical data sections for additional technical information. Please refer to back cover for description of “NOTES”

For detailed specifications, data sheets, drawings and performance curves visit http://catalog.wegelectric.com

Data subject to change without notice.



ODP - Resilient Base

HP	kW	RPM	NEMA Frame	Catalog Number	List Price	Mult. Symbol	Approx. Shipping Weight (lbs)	Service Factor	FL Amps @ High	FL. Eff (%)	"C" Dimension (in)	Voltage (V)	Notes
0.33	0.25	1800	56	.3318OS3ERB56-S	279	F1B	21	1.35	0.72	68	9.921	208-230/460	9;13
		1800	B56	.3318OS3ERBB56	279	F1B	22	1.35	0.70	64.0	11.023	208-230/460	9;13
0.5	0.37	1800	56	.5018OS3ERB56-S	310	F1B	22	1.25	0.98	72	10.315	208-230/460	9;13
		1800	B56	.5018OS3ERBB56	310	F1B	26	1.25	0.92	70.0	11.023	208-230/460	9;13
0.75	0.55	1800	56	.7518OS3ERB56-S	339	F1B	25	1.25	1.34	75.5	10.709	208-230/460	9;13
		1800	E56	.7518OS3ERBE56	339	F1B	26	1.25	1.35	72.0	11.811	208-230/460	9;13
1	0.75	1800	56	00118OS3ERB56-S	356	F1B	28	1.15	1.80	77	10.709	208-230/460	9;13
		1800	E56	00118OS3ERBE56	356	F1B	29	1.15	1.70	74.0	11.811	208-230/460	9;13
1.5	1.1	1800	56H	00158OS3ERB56-S	364	F1B	32	1.15	2.30	80	11.496	208-230/460	9;13
		1800	E56	00158OS3ERBE56	364	F1B	35	1.15	2.30	77.0	12.992	208-230/460	9;13

Refer to electrical and mechanical data sections for additional technical information. Please refer to back cover for description of “NOTES”

For detailed specifications, data sheets, drawings and performance curves visit http://catalog.wegelectric.com

THREE-PHASE

ODP – Foot Mount



HP	kW	RPM	NEMA Frame	Catalog Number	List Price	Mult. Symbol	Approx. Shipping Weight (lbs)	Service Factor	FL Amps @ High	FL. Eff (%)	"C" Dimension (in)	Voltage (V)	Notes
0.25	0.18	3600	56	.25360S3E56-S	201	F1B	21	1.35	0.49	64	10.315	208-230/460	9
		3600	A56	.25360S3EA56	201	F1B	20	1.35	0.55	58.0	10.315	208-230/460	9
		1800	56	.25180S3E56-S	204	F1B	21	1.35	0.57	66	9.921	208-230/460	9
		1800	A56	.25180S3EA56	204	F1B	21	1.35	0.70	62.0	10.315	208-230/460	9
		1200	56	.25120S3E56-S	254	F1B	22	1.35	0.60	64	10.315	208-230/460	9
		1200	A56	.25120S3EA56	254	F1B	21	1.35	0.75	55.0	10.315	208-230/460	9
0.33	0.25	3600	56	.33360S3E56-S	208	F1B	21	1.35	0.66	66	10.315	208-230/460	9
		3600	A56	.33360S3EA56	208	F1B	21	1.35	0.70	63.0	10.315	208-230/460	9
		1800	56	.33180S3E56-S	221	F1B	21	1.35	0.72	68	9.921	208-230/460	9
		1800	A56	.33180S3EA56	221	F1B	22	1.35	0.70	64.0	10.315	208-230/460	9
		1800	56	.33180S3ERB56-S	279	F1B	21	1.35	0.72	68	9.921	208-230/460	9;13
		1800	B56	.33180S3ERBB56	279	F1B	22	1.35	0.70	64.0	11.023	208-230/460	9;13
		1200	56	.33120S3E56-S	292	F1B	23	1.35	0.76	68	10.315	208-230/460	9
		1200	A56	.33120S3EA56	292	F1B	26	1.35	0.73	66.0	10.315	208-230/460	9
0.5	0.37	3600	56	.50360S3E56-S	221	F1B	21	1.25	0.95	68	10.315	208-230/460	9
		3600	A56	.50360S3EA56	221	F1B	23	1.25	0.91	66.0	10.315	208-230/460	9
		1800	56	.50180S3E56-S	253	F1B	22	1.25	0.98	72	10.315	208-230/460	9
		1800	A56	.50180S3EA56	253	F1B	24	1.25	0.92	70.0	10.315	208-230/460	9
		1800	56	.50180S3ERB56-S	310	F1B	22	1.25	0.98	72	10.315	208-230/460	9;13
		1800	B56	.50180S3ERBB56	310	F1B	26	1.25	0.92	70.0	11.023	208-230/460	9;13
		1200	56	.50120S3E56-S	304	F1B	26	1.25	0.99	72	10.709	208-230/460	9
		1200	B56	.50120S3EB56	304	F1B	31	1.25	1.00	70.0	11.102	208-230/460	9
0.75	0.55	3600	56	.75360S3E56-S	259	F1B	23	1.25	1.26	72	10.709	208-230/460	9
		3600	B56	.75360S3EB56	259	F1B	24	1.25	1.20	72.0	11.102	208-230/460	9
		1800	56	.75180S3E56-S	282	F1B	25	1.25	1.34	75.5	10.709	208-230/460	9
		1800	B56	.75180S3EB56	282	F1B	26	1.25	1.35	72.0	11.102	208-230/460	9
		1800	56	.75180S3ERB56-S	339	F1B	25	1.25	1.34	75.5	10.709	208-230/460	9;13
		1800	E56	.75180S3ERBE56	339	F1B	26	1.25	1.35	72.0	11.811	208-230/460	9;13
		1200	56H	.75120S3E56-S	332	F1B	31	1.15	1.29	75.5	11.496	208-230/460	9
		1200	D56	.75120S3ED56	332	F1B	37	1.15	1.35	70.0	12.283	208-230/460	9
1	0.75	3600	56	00136OS3E56-S	300	F1B	24	1.25	1.61	74	10.709	208-230/460	9
		3600	B56	00136OS3EB56	300	F1B	26	1.25	1.55	74.0	11.102	208-230/460	9
		1800	56	00118OS3E56-S	299	F1B	28	1.15	1.80	77	10.709	208-230/460	9
		1800	B56	00118OS3EB56	299	F1B	29	1.15	1.70	74.0	11.102	208-230/460	9
		1800	56	00118OS3ERB56-S	356	F1B	28	1.15	1.80	77	10.709	208-230/460	9;13
		1800	E56	00118OS3ERBE56	356	F1B	29	1.15	1.70	74.0	11.811	208-230/460	9;13
		1200	56H	00112OS3E56-S	394	F1B	35	1.15	1.70	77	11.89	208-230/460	9
		1200	F56H	00112OS3EF56	394	F1B	42	1.15	1.73	74.0	13.464	208-230/460	9

Continued on next page

Refer to electrical and mechanical data sections for additional technical information. Please refer to back cover for description of "NOTES"

For detailed specifications, data sheets, drawings and performance curves visit http://catalog.wegelectric.com

Data subject to change without notice.

ODP – Foot Mount *continued*

HP	kW	RPM	NEMA Frame	Catalog Number	List Price	Mult. Symbol	Approx. Shipping Weight (lbs)	Service Factor	FL Amps @ High	FL. Eff (%)	"C" Dimension (in)	Voltage (V)	Notes
1.5	1.1	3600	56	00156OS3E56-S	320	F1B	27	1.15	2.16	77	11.102	208-230/460	9
		3600	D56	00156OS3ED56	320	F1B	31	1.15	2.13	76.0	12.283	208-230/460	9
		1800	56H	00158OS3E56-S	305	F1B	32	1.15	2.30	80	11.496	208-230/460	9
		1800	D56	00158OS3ED56	305	F1B	34	1.15	2.30	77.0	12.283	208-230/460	9
		1800	56H	00158OS3ERB56-S	364	F1B	32	1.15	2.30	80	11.496	208-230/460	9;13
		1800	E56	00158OS3ERBE56	364	F1B	35	1.15	2.30	77.0	12.992	208-230/460	9;13
2	1.5	3600	56H	00236OS3E56-S	365	F1B	32	1.15	2.82	78.5	11.89	208-230/460	9
		3600	D56	00236OS3ED56	365	F1B	34	1.15	2.68	81.0	12.283	208-230/460	9
		1800	56H	00218OS3E56-S	324	F1B	35	1.15	3.11	78.5	11.89	208-230/460	9
		1800	F56H	00218OS3EF56	324	F1B	36	1.15	3.10	77.0	13.464	208-230/460	9
3	2.2	3600	56H	00336OS3E56-S	405	F1B	35	1.15	3.89	81.5	12.283	208-230/460	9
		3600	F56H	00336OS3EF56	405	F1B	39	1.15	3.87	82.0	13.464	208-230/460	9

Refer to electrical and mechanical data sections for additional technical information. Please refer to back cover for description of “NOTES”

For detailed specifications, data sheets, drawings and performance curves visit http://catalog.wegelectric.com

THREE-PHASE





ODP – C-Face – Foot Mount

HP	kW	RPM	NEMA Frame	Catalog Number	List Price	Mult. Symbol	Approx. Shipping Weight (lbs)	Service Factor	FL Amps @ High	FL. Eff (%)	"C" Dimension (in)	Voltage (V)	Notes
0.25	0.18	3600	56C	.25360S3E56C-S	222	F1B	21	1.35	0.49	64	10.315	208-230/460	9
		3600	A56C	.25360S3EA56C	222	F1B	20	1.35	0.55	58.0	10.315	208-230/460	9
		1800	56C	.25180S3E56C-S	225	F1B	21	1.35	0.57	66	9.921	208-230/460	9
		1800	A56C	.25180S3EA56C	225	F1B	21	1.35	0.70	62.0	10.315	208-230/460	9
		1200	56C	.25120S3E56C-S	275	F1B	22	1.35	0.60	64	10.315	208-230/460	9
		1200	A56C	.25120S3EA56C	275	F1B	23	1.35	0.75	55.0	10.315	208-230/460	9
0.33	0.25	3600	56C	.33360S3E56C-S	231	F1B	21	1.35	0.66	66	10.315	208-230/460	9
		3600	A56C	.33360S3EA56C	231	F1B	21	1.35	0.70	63.0	10.315	208-230/460	9
		1800	56C	.33180S3E56C-S	242	F1B	21	1.35	0.72	68	9.921	208-230/460	9
		1800	A56C	.33180S3EA56C	242	F1B	22	1.35	0.70	64.0	10.315	208-230/460	9
		1200	56C	.33120S3E56C-S	315	F1B	23	1.35	0.76	68	10.315	208-230/460	9
		1200	A56C	.33120S3EA56C	315	F1B	26	1.35	0.73	66.0	10.315	208-230/460	9
0.5	0.37	3600	56C	.50360S3E56C-S	242	F1B	21	1.25	0.95	68	10.315	208-230/460	9
		3600	A56C	.50360S3EA56C	242	F1B	23	1.25	0.91	66.0	10.315	208-230/460	9
		1800	56C	.50180S3E56C-S	274	F1B	22	1.25	0.98	72	10.315	208-230/460	9
		1800	A56C	.50180S3EA56C	274	F1B	24	1.25	0.92	70.0	10.315	208-230/460	9
		1200	56C	.50120S3E56C-S	328	F1B	26	1.25	0.99	72	10.709	208-230/460	9
		1200	B56C	.50120S3EB56C	328	F1B	31	1.25	1.00	70.0	11.102	208-230/460	9
0.75	0.55	3600	56C	.75360S3E56C-S	283	F1B	23	1.25	1.26	72	10.709	208-230/460	9
		3600	B56C	.75360S3EB56C	283	F1B	24	1.25	1.20	72.0	11.102	208-230/460	9
		1800	56C	.75180S3E56C-S	303	F1B	25	1.25	1.34	75.5	10.709	208-230/460	9
		1800	B56C	.75180S3EB56C	303	F1B	26	1.25	1.35	72.0	11.102	208-230/460	9
		1200	56HC	.75120S3E56C-S	354	F1B	31	1.15	1.29	75.5	11.496	208-230/460	9
		1200	D56C	.75120S3ED56C	354	F1B	37	1.15	1.35	70.0	12.283	208-230/460	9
1	0.75	3600	56C	001360S3E56C-S	321	F1B	24	1.25	1.61	74	10.709	208-230/460	9
		3600	B56C	001360S3EB56C	321	F1B	26	1.25	1.55	74.0	11.102	208-230/460	9
		1800	56C	001180S3E56C-S	320	F1B	28	1.15	1.80	77	10.709	208-230/460	9
		1800	B56C	001180S3EB56C	320	F1B	29	1.15	1.70	74.0	11.102	208-230/460	9
		1200	56HC	001120S3E56C-S	416	F1B	35	1.15	1.70	77	11.89	208-230/460	9
		1200	F56HC	001120S3EF56C	416	F1B	42	1.15	1.73	74.0	13.464	208-230/460	9
1.5	1.1	3600	56C	001560S3E56C-S	344	F1B	27	1.15	2.16	77	11.102	208-230/460	9
		3600	D56C	001560S3ED56C	344	F1B	31	1.15	2.13	76.0	12.283	208-230/460	9
		1800	56HC	001580S3E56C-S	329	F1B	32	1.15	2.30	80	11.496	208-230/460	9
		1800	D56C	001580S3ED56C	329	F1B	34	1.15	2.30	77.0	12.283	208-230/460	9
2	1.5	3600	56HC	002360S3E56C-S	355	F1B	32	1.15	2.82	78.5	11.89	208-230/460	9
		3600	D56C	002360S3ED56C	355	F1B	34	1.15	2.68	81.0	12.283	208-230/460	9
		1800	56HC	002180S3E56C-S	346	F1B	35	1.15	3.11	78.5	11.89	208-230/460	9
		1800	F56HC	002180S3EF56C	346	F1B	36	1.15	3.10	77.0	13.464	208-230/460	9
3	2.2	3600	56HC	003360S3E56C-S	379	F1B	35	1.15	3.89	81.5	12.283	208-230/460	9
		3600	F56HC	003360S3EF56C	379	F1B	39	1.15	3.87	82.0	13.464	208-230/460	9

Refer to electrical and mechanical data sections for additional technical information. Please refer to back cover for description of "NOTES"

For detailed specifications, data sheets, drawings and performance curves visit http://catalog.wegelectric.com

Data subject to change without notice.

ODP – C-Face – Footless

HP	kW	RPM	NEMA Frame	Catalog Number	List Price	Mult. Symbol	Approx. Shipping Weight (lbs)	Service Factor	FL Amps @ High	FL. Eff (%)	"C" Dimension (in)	Voltage (V)	Notes
0.25	0.18	1800	56C	.25180S3H56CFL-S	226	F1B	21	1.35	0.46	66	9.921	575	9;20
		1800	A56C	.25180S3HA56CFL	226	F1B	21	1.35	0.56	62.0	10.315	575	9;20
0.33	0.25	3600	56C	.33360S3E56CFL-S	231	F1B	21	1.35	0.66	66	10.315	208-230/460	9;20
		3600	A56C	.33360S3EA56CFL	231	F1B	21	1.35	0.70	63.0	10.315	208-230/460	9;20
		1800	56C	.33180S3E56CFL-S	242	F1B	21	1.35	0.72	68	9.921	208-230/460	9;20
		1800	A56C	.33180S3EA56CFL	242	F1B	22	1.35	0.70	64.0	10.315	208-230/460	9;20
0.5	0.37	3600	56C	.50360S3E56CFL-S	242	F1B	21	1.25	0.95	68	10.315	208-230/460	9;20
		3600	A56C	.50360S3EA56CFL	242	F1B	23	1.25	0.91	66.0	10.315	208-230/460	9;20
		1800	56C	.50180S3E56CFL-S	274	F1B	22	1.25	0.98	72	10.315	208-230/460	9;20
		1800	A56C	.50180S3EA56CFL	274	F1B	24	1.25	0.92	70.0	10.315	208-230/460	9;20
		1800	56C	.50180S3H56CFL-S	274	F1B	22	1.25	0.78	72	10.315	575	9;20
		1800	A56C	.50180S3HA56CFL	274	F1B	24	1.25	0.74	70.0	10.315	575	9;20
0.75	0.55	3600	56C	.75360S3E56CFL-S	283	F1B	23	1.25	1.26	72	10.709	208-230/460	9;20
		3600	B56C	.75360S3EB56CFL	283	F1B	24	1.25	1.20	72.0	11.102	208-230/460	9;20
		1800	56C	.75180S3E56CFL-S	303	F1B	25	1.25	1.34	75.5	10.709	208-230/460	9;20
		1800	B56C	.75180S3EB56CFL	303	F1B	26	1.25	1.35	72.0	11.102	208-230/460	9;20
		1800	56C	.75180S3H56CFL-S	276	F1B	25	1.25	1.07	75.5	10.709	575	9;20
		1800	B56CFL	.75180S3HB56CFL	276	F1B	36	1.25	1.08	72.0	11.102	575	9;20
1	0.75	3600	56C	001360S3E56CFL-S	301	F1B	24	1.25	1.61	74	10.709	208-230/460	9;20
		3600	B56C	001360S3EB56CFL	301	F1B	26	1.25	1.55	74.0	11.102	208-230/460	9;20
		1800	56C	001180S3E56CFL-S	320	F1B	28	1.15	1.80	77	10.709	208-230/460	9;20
		1800	B56C	001180S3EB56CFL	320	F1B	29	1.15	1.70	74.0	11.102	208-230/460	9;20
		1800	56C	001180S3H56CFL-S	320	F1B	28	1.15	1.44	77	10.709	575	9;20
		1800	D56C	001180S3HB56CFL	320	F1B	29	1.15	1.36	74.0	12.283	575	9;20
1.5	1.1	3600	56C	001560S3E56CFL-S	344	F1B	27	1.15	2.16	77	11.102	208-230/460	9;20
		3600	D56C	001560S3ED56CFL	344	F1B	31	1.15	2.13	76.0	12.283	208-230/460	9;20
		1800	56HC	001580S3E56CFL-S	329	F1B	32	1.15	2.30	80	11.496	208-230/460	9;20
		1800	D56C	001580S3ED56CFL	329	F1B	34	1.15	2.30	77.0	12.283	208-230/460	9;20
		1800	56HC	001580S3H56CFL-S	329	F1B	32	1.15	1.84	80	11.496	575	9;20
		1800	D56C	001580S3HD56CFL	329	F1B	34	1.15	1.84	77.0	12.283	575	9;20
2	1.5	3600	56HC	002360S3E56CFL-S	355	F1B	32	1.15	2.82	78.5	11.89	208-230/460	9;20
		3600	D56C	002360S3ED56CFL	355	F1B	34	1.15	2.68	81.0	12.283	208-230/460	9;20
		1800	56HC	002180S3H56CFL-S	346	F1B	35	1.15	2.49	78.5	11.89	575	9;20
		1800	F56C	002180S3HF56CFL	346	F1B	36	1.15	2.48	77.0	13.464	575	9;20
3	2.2	3600	56HC	003360S3E56CFL-S	379	F1B	35	1.15	3.89	81.5	12.283	208-230/460	9;20
		3600	F56C	003360S3EF56CFL	379	F1B	39	1.15	3.87	82.0	13.464	208-230/460	9;20

Refer to electrical and mechanical data sections for additional technical information. Please refer to back cover for description of "NOTES"

For detailed specifications, data sheets, drawings and performance curves visit http://catalog.wegelectric.com

Fractional Explosion Proof Motors

Features:

- Class F insulation
- 1.0 service factor
- Foot mount motors with and without C-flange
- Class I - Group C & D and Class II - Groups E, F & G – T3C
- Thermally Protected
- Long leads for remote wiring
- Aluminum endshields



c UL US LISTED

Features that make a difference:

- 50°C ambient temperature rating
- Three-Phase motors also rated for 50Hz
- Unassembled aluminum conduit box included

ADDITIONAL TECHNICAL DATA

ELECTRICAL DATA: **Contact WEG**
MECHANICAL DATA: **Contact WEG**

Please contact your authorized WEG distributor or go to **weg.net/us** for further information or additional specifications. **1-800-ASK-4WEG**

www.weg.net/us

EXPLOSION PROOF - SINGLE-PHASE

Foot Mount

HP	kW	RPM	NEMA Frame	Catalog Number	List Price	Mult. Symbol	Approx. Shipping Weight (lbs)	Service Factor	FL Amps @ High	FL. Eff (%)	"C" Dimension (in)	Voltage (V)	Notes
0.33	0.25	3600	56	.3336XS1B56	612	XF	23	1.00	2.60	59.7	11.790	115/208-230	9
		1800	56	.3318XS1B56	670	XF	25	1.00	3.00	60.4	11.790	115/208-230	9;17
0.5	0.37	3600	56	.5036XS1B56	636	XF	26	1.00	3.40	66.7	12.040	115/208-230	9
		1800	56	.5018XS1B56	739	XF	27	1.00	4.20	62.4	12.290	115/208-230	9
0.75	0.55	3600	56	.7536XS1B56	717	XF	30	1.00	4.30	74.5	12.540	115/208-230	9
		1800	56	.7518XS1B56	868	XF	34	1.00	4.52	70.8	13.040	115/208-230	9
1	0.75	3600	56	00136XS1B56	774	XF	32	1.00	5.30	76.5	13.040	115/208-230	9
		1800	56	00118XS1B56	988	XF	37	1.00	6.30	74.8	13.790	115/208-230	9
1.5	1.1	3600	56	00156XS1C56	1,121	XF	38	1.00	7.80	80.0	14.040	208-230	9
		1800	56H	00158XS1C56H	1,324	XF	48	1.00	7.80	80.0	15.420	208-230	9
2	1.5	3600	56H	00236XS1C56H	1,408	XF	43	1.00	9.80	81.1	14.540	208-230	9

Refer to electrical and mechanical data sections for additional technical information. Please refer to back cover for description of “NOTES”

For detailed specifications, data sheets, drawings and performance curves visit http://catalog.wegelectric.com

EXPLOSION PROOF - SINGLE-PHASE

C–Flange – Foot Mount

HP	kW	RPM	NEMA Frame	Catalog Number	List Price	Mult. Symbol	Approx. Shipping Weight (lbs)	Service Factor	FL Amps @ High	FL. Eff (%)	"C" Dimension (in)	Voltage (V)	Notes
0.33	0.25	3600	56C	.3336XS1B56C	737	XF	23	1.00	2.60	59.7	11.790	115/208-230	9
		1800	56C	.3318XS1B56C	816	XF	25	1.00	3.00	60.4	11.790	115/208-230	9;17
0.5	0.37	3600	56C	.5036XS1B56C	717	XF	26	1.00	3.40	66.7	12.040	115/208-230	9
		1800	56C	.5018XS1B56C	817	XF	27	1.00	4.20	62.4	12.290	115/208-230	9
0.75	0.55	3600	56C	.7536XS1B56C	773	XF	30	1.00	4.30	74.5	12.540	115/208-230	9
		1800	56C	.7518XS1B56C	912	XF	34	1.00	4.52	70.8	13.040	115/208-230	9
1	0.75	3600	56C	00136XS1B56C	814	XF	32	1.00	5.30	76.5	13.040	115/208-230	9
		1800	56C	00118XS1B56C	1,036	XF	37	1.00	6.30	74.8	13.790	115/208-230	9
1.5	1.1	3600	56C	00156XS1C56C	1,274	XF	38	1.00	7.80	80.0	14.040	208-230	9
		1800	56HC	00158XS1C56HC	1,420	XF	48	1.00	7.80	80.0	15.420	208-230	9
2	1.5	3600	56HC	00236XS1C56HC	1,457	XF	43	1.00	9.80	81.1	14.540	208-230	9

Refer to electrical and mechanical data sections for additional technical information. Please refer to back cover for description of “NOTES”

For detailed specifications, data sheets, drawings and performance curves visit http://catalog.wegelectric.com

Data subject to change without notice.



Foot Mount

HP	kW	RPM	NEMA Frame	Catalog Number	List Price	Mult. Symbol	Approx. Shipping Weight (lbs)	Service Factor	FL Amps @ High	FL. Eff (%)	"C" Dimension (in)	Voltage (V)	Notes
0.33	0.25	3600	56	.3336XS3E56	650	XF	21	1.00	0.60	69.8	10.520	208-230/460	9;17
		1800	56	.3318XS3E56	713	XF	23	1.00	0.60	76.7	10.520	208-230/460	9;17
0.5	0.37	3600	56	.5036XS3E56	782	XF	24	1.00	0.90	73.1	11.790	208-230/460	9
		1800	56	.5018XS3E56	741	XF	27	1.00	0.85	79.1	11.920	208-230/460	9
0.75	0.55	3600	56	.7536XS3E56	815	XF	25	1.00	1.20	77.1	11.790	208-230/460	9
		1800	56	.7518XS3E56	817	XF	28	1.00	1.40	78.6	12.290	208-230/460	9
1	0.75	3600	56	00136XS3E56	858	XF	27	1.00	1.60	79.0	11.920	208-230/460	9
		1800	56	00118XS3E56	895	XF	31	1.00	1.60	82.2	12.540	208-230/460	9
1.5	1.1	3600	56	00156XS3E56	1,143	XF	30	1.00	2.10	81.7	12.290	208-230/460	9
		1800	56H	00158XS3E56H	974	XF	41	1.00	2.10	86.0	14.040	208-230/460	9
2	1.5	3600	56H	00236XS3E56H	1,171	XF	35	1.00	2.70	83.7	14.040	208-230/460	9
		1800	56H	00218XS3E56H	1,090	XF	48	1.00	2.70	86.9	15.040	208-230/460	9
3	2.2	3600	56H	00336XS3E56H	1,386	XF	46	1.00	3.80	86.7	14.420	208-230/460	9

Refer to electrical and mechanical data sections for additional technical information. Please refer to back cover for description of “NOTES”

For detailed specifications, data sheets, drawings and performance curves visit http://catalog.wegelectric.com

EXPLOSION PROOF - THREE-PHASE



C-Flange – Foot Mount

HP	kW	RPM	NEMA Frame	Catalog Number	List Price	Mult. Symbol	Approx. Shipping Weight (lbs)	Service Factor	FL Amps @ High	FL. Eff (%)	"C" Dimension (in)	Voltage (V)	Notes
0.33	0.25	3600	56C	.3336XS3E56C	821	XF	21	1.00	0.60	69.8	10.520	208-230/460	9;17
		1800	56C	.3318XS3E56C	877	XF	23	1.00	0.60	76.7	10.520	208-230/460	9;17
0.5	0.37	3600	56C	.5036XS3E56C	856	XF	24	1.00	0.90	73.1	11.790	208-230/460	9
		1800	56C	.5018XS3E56C	926	XF	27	1.00	0.85	79.1	11.920	208-230/460	9
0.75	0.55	3600	56C	.7536XS3E56C	884	XF	25	1.00	1.20	77.1	11.790	208-230/460	9
		1800	56C	.7518XS3E56C	944	XF	28	1.00	1.40	78.6	12.290	208-230/460	9
1	0.75	3600	56C	00136XS3E56C	924	XF	27	1.00	1.60	79.0	11.920	208-230/460	9
		1800	56C	00118XS3E56C	1,007	XF	31	1.00	1.60	82.2	12.540	208-230/460	9
1.5	1.1	3600	56C	00156XS3E56C	1,038	XF	30	1.00	2.10	81.7	12.290	208-230/460	9
		1800	56HC	00158XS3E56HC	1,073	XF	41	1.00	2.10	86.0	14.040	208-230/460	9
2	1.5	3600	56HC	00236XS3E56HC	1,125	XF	35	1.00	2.70	83.7	14.040	208-230/460	9
		1800	56HC	00218XS3E56HC	1,162	XF	48	1.00	2.70	86.9	15.040	208-230/460	9
3	2.2	3600	56HC	00336XS3E56HC	1,394	XF	46	1.00	3.80	86.7	14.420	208-230/460	9

Refer to electrical and mechanical data sections for additional technical information. Please refer to back cover for description of “NOTES”

For detailed specifications, data sheets, drawings and performance curves visit http://catalog.wegelectric.com

Data subject to change without notice.

Air Handling Motors

COMMERCIAL HVAC MOTORS

TEFC and ODP – Single Phase

High Starting Torque makes these motors ideal for a wide range of applications.

Standard Features:

- Ball bearings
- Class B insulation



TEFC



Resilient Base



ODP

ADDITIONAL TECHNICAL DATA

ELECTRICAL DATA: B-59; B-62
MECHANICAL DATA: C-51; C-55; C-57

Features that make a difference:

- High Starting Torque
- TEFC motors are rated IP55 (gasketed conduit box and capacitor cover)

TEFC and ODP – Three Phase

AEGIS SGR BEARING PROTECTION RING
AEGIS INSTALLED
Patented Technology

Features that make a difference:

- New ventilation system for improved thermal performance
- Robust feet design suitable for tougher applications
- New and more robust eyebolts design (frames 182/4T and up) plus a second eyebolt on non-drive end allowing vertical lifting capability (frames 213/5T and 254/6T)
- Oversized diagonally split aluminum terminal box that exceeds IP55 requirements
- Terminal box rotatable in 90 degrees increments for flexibility during installation
- Color coded leads as standard for easy wiring
- Regreasable ball bearings on 254/6T frame as standard (optional for 182/4T and 213/5T)
- IP55 Ingress Protection as standard, being appropriate for severe environments
- Bearing cap as standard on flanged motors, optional on non flanged
- Suitable for VFD operation as per NEMA MG1 part 31.4.4.2
- Motor frame painting system 500 hours salt spray resistant

ADDITIONAL TECHNICAL DATA

ELECTRICAL DATA: B-17; B-18
MECHANICAL DATA: C-7; C-11

COMMERCIAL HVAC MOTORS



TEFC – Single-Phase – Foot Mount

HP	kW	RPM	NEMA Frame	Catalog Number	List Price	Mult. Symbol	Approx. Shipping Weight (lbs)	Service Factor	FL Amps @ High	FL. Eff (%)	"C" Dimension (in)	Voltage (V)	Notes
0.25	0.18	3600	B56	.2536ES1BB56	257	F1	31	1.15	2.30	50.0	11.102	115/208-230	9
		1800	B56	.2518ES1BB56	267	F1	33	1.15	2.35	57.7	11.102	115/208-230	9
0.33	0.25	3600	B56	.3336ES1BB56	267	F1	36	1.15	2.85	53.0	11.102	115/208-230	9
		1800	B56	.3318ES1BB56	283	F1	36	1.15	2.80	61.0	11.102	115/208-230	9
0.5	0.37	3600	B56	.5036ES1BB56	284	F1	40	1.15	3.80	58.0	11.102	115/208-230	9
		3600	B56	.5036ES1BOLB56	316	F1	40	1.15	3.80	58.0	11.102	115/208-230	4;9
		1800	B56	.5018ES1BB56	312	F1	41	1.15	3.70	66.5	11.102	115/208-230	9
		1200	D56	.5012ES1BD56	512	F1	41	1.15	3.60	71.0	12.283	115/208-230	9
0.75	0.55	3600	B56	.7536ES1BB56	297	F1	41	1.15	5.20	64.0	11.102	115/208-230	9
		3600	B56	.7536ES1BOLB56	329	F1	41	1.15	5.20	64.0	11.102	115/208-230	4;9
		1800	B56	.7518ES1BB56	348	F1	46	1.15	5.30	68.5	11.102	115/208-230	9
		1200	F56H	.7512ES1BF56	648	F1	58	1.15	5.00	71.0	13.464	115/208-230	9
1	0.75	3600	D56	00136ES1BD56	376	F1	46	1.15	6.40	67.0	12.283	115/208-230	9
		3600	D56	00136ES1BOLD56	408	F1	46	1.15	6.40	67.0	12.283	115/208-230	4;9
		1800	D56	00118ES1BD56	401	F1	52	1.15	7.00	70.3	12.283	115/208-230	9
1.5	1.1	3600	D56	00156ES1BD56	432	F1	56	1.15	8.55	70.0	12.283	115/208-230	9
		3600	D56	00156ES1BOLD56	463	F1	56	1.15	8.55	70.0	12.283	115/208-230	4;9
		1800	F56H	00158ES1BF56	456	F1	58	1.15	8.70	76.5	13.464	115/208-230	9
2	1.5	3600	F56H	00236ES1BF56	561	F1	65	1.15	10.0	74.0	13.464	115/208-230	9
		3600	F56H	00236ES1BOLF56	592	F1	65	1.15	10.0	74.0	13.464	115/208-230	4;9

Refer to electrical and mechanical data sections for additional technical information. Please refer to back cover for description of "NOTES"

For detailed specifications, data sheets, drawings and performance curves visit http://catalog.wegelectric.com

Data subject to change without notice.



TEAO – Single-Phase – Resilient Base

HP	kW	RPM	NEMA Frame	Catalog Number	List Price	Mult. Symbol	Approx. Shipping Weight (lbs)	Service Factor	FL Amps @ High	FL. Eff (%)	"C" Dimension (in)	Voltage (V)	Notes
0.33	0.25	1800	48	.3318ES1BRBPFC48	325	G1	23	1.25	3.00	64.0	11.339	115/208-230	3;9;13;16
0.5	0.37	1800	C56	.5018ES1BRBPFC56	350	G1	27	1.25	4.20	65.0	11.732	115/208-230	3;9;13;16
0.75	0.55	1800	B56	.7518ES1BRBPFB56	433	G1	33	1.25	5.60	70.0	11.811	115/208-230	3;9;13
1	0.75	1800	D56	00118ES1BRBPFD56	469	G1	35	1.15	7.00	72.0	12.992	115/208-230	3;9;13

TEAO - Single-Phase - Foot Mount

HP	kW	RPM	NEMA Frame	Catalog Number	List Price	Mult. Symbol	Approx. Shipping Weight (lbs)	Service Factor	FL Amps @ High	FL. Eff (%)	"C" Dimension (in)	Voltage (V)	Notes
0.33	0.25	1800	48	.3318ES1BPFC48	311	G1	23	1.25	3.00	64.0	10.748	115/208-230	3;9;16
0.5	0.37	1800	C56	.5018ES1BPFC56	336	G1	27	1.25	4.20	65.0	11.102	115/208-230	3;9;16
0.75	0.55	1800	B56	.7518ES1BPFB56	414	G1	33	1.25	5.60	70.0	11.102	115/208-230	3;9
1	0.75	1800	D56	00118ES1BPFD56	449	G1	35	1.15	7.00	72.0	12.283	115/208-230	3;9

Refer to electrical and mechanical data sections for additional technical information. Please refer to back cover for description of “NOTES”

For detailed specifications, data sheets, drawings and performance curves visit http://catalog.wegelectric.com



ODP – Single-Phase – Foot Mount

HP	kW	RPM	NEMA Frame	Catalog Number	List Price	Mult. Symbol	Approx. Shipping Weight (lbs)	Service Factor	FL Amps @ High	FL. Eff (%)	"C" Dimension (in)	Voltage (V)	Notes
0.12	0.09	1800	B48	.12180S1BB48	201	F1B	17	1.40	1.60	48.1	9.252	115/208-230	9
0.16	0.12	3600	B48	.16360S1BB48	216	F1B	17	1.35	1.55	49.9	9.252	115/208-230	9
		1800	B48	.16180S1BB48	208	F1B	17	1.35	1.85	50.3	9.252	115/208-230	9
		1800	B48	.16180S1BSPB48	224	F1B	19	1.35	1.90	49.9	9.252	115/208-230	9;16
0.25	0.18	3600	56	.25360S1B56	220	F1B	19	1.35	2.15	54.7	9.646	115/208-230	9
		3600	B48	.25360S1BB48	220	F1B	19	1.35	2.15	54.7	9.252	115/208-230	9
		1800	56	.25180S1B56	209	F1B	19	1.35	2.65	55.9	9.646	115/208-230	9
		1800	B48	.25180S1BB48	209	F1B	19	1.35	2.65	55.9	9.252	115/208-230	9
		1800	B48	.25180S1BSPB48	240	F1B	20	1.35	2.40	59.5	9.252	115/208-230	9;16
0.33	0.25	3600	C48	.33360S1BC48	222	F1B	22	1.35	2.85	57.6	10.197	115/208-230	9
		3600	C56	.33360S1BC56	222	F1B	22	1.35	2.85	57.6	10.551	115/208-230	9
		1800	C48	.33180S1BC48	237	F1B	22	1.35	3.11	58.6	10.197	115/208-230	9
		1800	C56	.33180S1BC56	237	F1B	22	1.35	3.30	58.2	10.551	115/208-230	9
		1800	C48	.33180S1BSPC48	258	F1B	22	1.35	3.13	60.0	10.197	115/208-230	9;16
0.5	0.37	3600	C48	.50360S1BC48	237	F1B	24	1.25	3.60	64.4	10.197	115/208-230	9
		3600	C56	.50360S1BC56	242	F1B	24	1.25	3.60	64.4	10.551	115/208-230	9
		1800	C48	.50180S1BC48	273	F1B	24	1.25	4.25	61.7	10.197	115/208-230	9
		1800	C56	.50180S1BC56	264	F1B	24	1.25	4.25	61.7	10.551	115/208-230	9
		1800	C48	.50180S1BSPC48	279	F1B	24	1.25	4.00	63.5	10.197	115/208-230	9;16
0.75	0.55	3600	B56	.75360S1BB56	274	F1B	32	1.25	5.25	67.2	11.102	115/208-230	9
		1800	D56	.75180S1BD56	328	F1B	36	1.25	5.40	66.7	12.283	115/208-230	9
1	0.75	3600	D56	001360S1BD56	296	F1B	36	1.25	6.80	66.3	12.283	115/208-230	9
		1800	D56	001180S1BD56	355	F1B	39	1.15	7.00	71.4	12.283	115/208-230	9
1.5	1.1	3600	D56	001560S1BD56	333	F1B	40	1.15	8.90	70.0	12.283	115/208-230	9
		1800	F56H	001580S1BCH56H	438	F1B	37	1.15	10.2	71.3	13.464	115/208-230	9
		1800	F56H	001580S1BF56	438	F1B	37	1.15	10.2	71.3	13.464	115/208-230	9
		1800	F56H	001580S1BOF56	439	F1B	51	1.15	10.2	71.3	13.464	115/208-230	3;9
2	1.5	3600	F56H	002360S1BF56	409	F1B	41	1.15	11.0	77.9	13.464	115/208-230	9
		1800	G56H	002180S1BG56	522	F1B	46	1.00	14.0	71.4	13.858	115/208-230	1;9
3	2.2	3600	G56H	003360S1BG56	475	F1B	44	1.00	15.5	78.0	13.858	115/208-230	1;9

Refer to electrical and mechanical data sections for additional technical information. Please refer to back cover for description of "NOTES"

For detailed specifications, data sheets, drawings and performance curves visit http://catalog.wegelectric.com

Data subject to change without notice.



ODP - Single-Phase - Resilient Base

HP	kW	RPM	NEMA Frame	Catalog Number	List Price	Mult. Symbol	Approx. Shipping Weight (lbs)	Service Factor	FL Amps @ High	FL. Eff (%)	"C" Dimension (in)	Voltage (V)	Notes
0.25	0.18	1800	B48	.25180S1BRB0B48	274	F1B	22	1.35	2.40	59.5	10.632	115/208-230	3;9;13;16
0.33	0.25	1800	C48	.33180S1BRB0C48	284	F1B	26	1.35	3.13	60.0	10.039	115/208-230	3;9;13;16
		1800	C56	.33180S1BRB0C56	288	F1B	22	1.35	3.13	60.0	11.593	115/208-230	3;9;13;16
		1800	C56	.33180S1PRB0C56	288	F1B	22	1.35	2.58	58.6	11.593	277	3;9;13
0.5	0.37	1800	C48	.50180S1BRB0C48	311	F1B	28	1.25	4.00	63.5	10.039	115/208-230	3;9;13;16
		1800	C56	.50180S1BRB0C56	316	F1B	24	1.25	4.00	63.5	11.593	115/208-230	3;9;13;16
		1800	C56	.50180S1PRB0C56	316	F1B	24	1.35	3.34	63.2	11.593	277	3;9;13
0.75	0.55	1800	D56	.75180S1BCHRB56	379	F1B	36	1.25	5.40	66.7	12.992	115/208-230	3;9;13
		1800	D56	.75180S1BRB0D56	379	F1B	36	1.25	5.40	66.7	12.992	115/208-230	3;9;13
		1800	D56	.75180S1PRB0D56	379	F1B	36	1.25	4.48	66.7	12.992	277	3;9;13
1	0.75	1800	D56	001180S1BRB0D56	408	F1B	39	1.15	7.00	71.4	12.992	115/208-230	3;9;13
		1800	D56	001180S1PRB0D56	408	F1B	39	1.15	5.81	71.4	12.992	277	3;9;13
1.5	1.1	3600	D56	001560S1BRB0D56	386	F1B	40	1.15	8.90	70.0	12.992	115/208-230	3;9;13
		1800	D56	001580S1BRB0D56	491	F1B	37	1.15	9.70	73.0	12.992	115/208-230	3;9;13

Refer to electrical and mechanical data sections for additional technical information. Please refer to back cover for description of “NOTES”

For detailed specifications, data sheets, drawings and performance curves visit http://catalog.wegelectric.com

COMMERCIAL HVAC MOTORS



ODP – Three-Phase – Resilient Base

HP	kW	RPM	NEMA Frame	Catalog Number	List Price	Mult. Symbol	Approx. Shipping Weight (lbs)	Service Factor	FL Amps @ High	FL. Eff (%)	"C" Dimension (in)	Voltage (V)	Notes
0.33	0.25	1800	56	.3318OS3ERB56-S	279	F1B	21	1.35	0.72	68	9.921	208-230/460	9;13
		1800	B56	.3318OS3ERBB56	279	F1B	22	1.35	0.70	64.0	11.023	208-230/460	9;13
0.5	0.37	1800	56	.5018OS3ERB56-S	310	F1B	22	1.25	0.98	72	10.315	208-230/460	9;13
		1800	B56	.5018OS3ERBB56	310	F1B	26	1.25	0.92	70.0	11.023	208-230/460	9;13
0.75	0.55	1800	56	.7518OS3ERB56-S	339	F1B	25	1.25	1.34	75.5	10.709	208-230/460	9;13
		1800	E56	.7518OS3ERBE56	339	F1B	26	1.25	1.35	72.0	11.811	208-230/460	9;13
1	0.75	1800	56	00118OS3ERB56-S	356	F1B	28	1.15	1.80	77	10.709	208-230/460	9;13
		1800	E56	00118OS3ERBE56	356	F1B	29	1.15	1.70	74.0	11.811	208-230/460	9;13
1.5	1.1	1800	56H	00158OS3ERB56-S	364	F1B	32	1.15	2.30	80	11.496	208-230/460	9;13
		1800	E56	00158OS3ERBE56	364	F1B	35	1.15	2.30	77.0	12.992	208-230/460	9;13

Refer to electrical and mechanical data sections for additional technical information. Please refer to back cover for description of "NOTES"

For detailed specifications, data sheets, drawings and performance curves visit http://catalog.wegelectric.com

Data subject to change without notice.



ODP - Single-Phase - Evaporative Cooler

HP	kW	RPM	NEMA Frame	Catalog Number	List Price	Mult. Symbol	Approx. Shipping Weight (lbs)	Service Factor	FL Amps @ High	FL. Eff (%)	"C" Dimension (in)	Voltage (V)	Notes
0.33	0.25	1800	56	.3318OS1AEC56	156	F1B	16	1.00	6.60	49.8	9.530	115	1;3;9;16
1/3-1/9	0.25/0.08	1800/1200	56	.3382OS1AEC56	188	F1B	19	1.00	6.60/3.70	49.8/33.6	9.530	115	1;3;9;16
0.5	0.37	1800	56	.5018OS1AEC56	164	F1B	17	1.00	8.20	58.0	9.530	115	1;3;9;16
		1800	56	.5018OS1DEC56	166	F1B	20	1.00	4.80	54.0	9.530	240	1;3;9;16
1/2-1/6	0.37/0.12	1800/1200	56	.5082OS1AEC56	199	F1B	20	1.00	8.20/4.60	58.0/42.4	9.530	115	1;3;9
		1800/1200	56	.5082OS1DEC56	220	F1B	20	1.00	4.80/2.10	54.0/39.6	9.530	240	1;3;9
0.75	0.55	1800	56	.7518OS1AEC56	201	F1B	21	1.00	10.4	61.9	9.530	115	1;3;9
		1800	56	.7518OS1DEC56	197	F1B	24	1.00	5.50	59.2	9.530	240	1;3;9
3/4-1/4	0.55/0.18	1800/1200	56	.7582OS1AEC56	251	F1B	24	1.00	10.4/5.50	61.9/42.8	9.530	115	1;3;9
		1800/1200	56	.7582OS1DEC56	267	F1B	24	1.00	5.50/2.60	59.0/47.4	9.530	240	1;3;9
1-1/3	0.75/0.25	1800/1200	56	00182OS1AEC56	364	F1B	28	1.00	12.1/7.10	65.1/49.1	10.960	115	1;3;9
		1800/1200	56	00182OS1DEC56	389	F1B	28	1.00	6.45/3.06	66.7/51.1	10.960	240	1;3;9

ADDITIONAL TECHNICAL DATA

ELECTRICAL DATA: Contact WEG
MECHANICAL DATA: C-60

Refer to electrical and mechanical data sections for additional technical information. Please refer to back cover for description of “NOTES”

For detailed specifications, data sheets, drawings and performance curves visit http://catalog.wegelectric.com

Air Handling Motors

HVAC MOTORS - WITH INTERNAL AEGIS® SGR



AEGIS SGR BEARING PROTECTION RING AEGIS INSTALLED Patented Technology

TEFC – Three-Phase – Foot Mount

HP	kW	RPM	NEMA Frame	Catalog Number	List Price	Mult. Symbol	Approx. Shipping Weight (lbs)	Service Factor	FL Amps @ High	FL. Eff (%)	"C" Dimension (in)	Voltage (V)	Notes
1	0.75	1800	143/5T	00118ET3E143T-SG	599	RSP	43	1.15	1.47	85.5	13.583	208-230/460	9;34
		1200	143/5T	00112ET3E145T-SG	669	RSP	43	1.15	1.58	82.5	13.583	208-230/460	9;34
1.5	1.1	3600	143/5T	00156ET3E143T-SG	613	RSP	39	1.15	1.87	84.0	13.189	208-230/460	9;34
		1800	143/5T	00158ET3E145T-SG	620	RSP	43	1.15	2.02	86.5	13.583	208-230/460	9;34
		1200	182/4T	00152ET3E182T-SG	826	RSP	73	1.15	2.22	87.5	16.339	208-230/460	9;34
2	1.5	3600	143/5T	00236ET3E145T-SG	654	RSP	45	1.15	2.47	85.5	13.976	208-230/460	9;34
		1800	143/5T	00218ET3E145T-SG	673	RSP	47	1.15	2.72	86.5	13.976	208-230/460	9;34
		1200	182/4T	00212ET3E184T-SG	883	RSP	83	1.15	3.00	88.5	17.126	208-230/460	9;34
3	2.2	3600	182/4T	00336ET3E182T-SG	835	RSP	71	1.15	3.67	86.5	16.339	208-230/460	9;34
		1800	182/4T	00318ET3E182T-SG	747	RSP	87	1.15	3.81	89.5	17.894	208-230/460	9;34
		1200	213/5T	00312ET3E213T-SG	1,183	RSP	142	1.15	4.17	89.5	19.291	208-230/460	9;34
5	3.7	3600	182/4T	00536ET3E184T-SG	930	RSP	86	1.15	5.90	88.5	17.894	208-230/460	9;34
		1800	182/4T	00518ET3E184T-SG	842	RSP	79	1.15	6.49	89.5	17.894	208-230/460	9;34
		1200	213/5T	00512ET3E215T-SG	1,360	RSP	156	1.15	6.74	89.5	20.079	208-230/460	9;34
7.5	5.5	3600	213/5T	00736ET3E213T-SG	1,180	RSP	144	1.15	8.67	89.5	20.079	208-230/460	9;34
		1800	213/5T	00718ET3E213T-SG	1,148	RSP	131	1.15	9.07	91.7	18.898	208-230/460	9;34
		1200	254/6T	00712ET3E254T-SG	2,079	RSP	248	1.15	9.98	91.0	22.559	208-230/460	9;34
10	7.5	3600	213/5T	01036ET3E215T-SG	1,360	RSP	173	1.15	11.5	90.2	21.654	208-230/460	9;34
		1800	213/5T	01018ET3E215T-SG	1,310	RSP	142	1.15	12.2	91.7	19.291	208-230/460	9;34
		1200	254/6T	01012ET3E256T-SG	2,368	RSP	277	1.15	13.8	91.0	23.346	208-230/460	9;34
15	11	3600	254/6T	01536ET3E254T-SG	1,869	RSP	220	1.15	17.4	91.0	22.559	208-230/460	9;34
		1800	254/6T	01518ET3E254T-SG	1,890	RSP	242	1.15	18.2	92.4	22.559	208-230/460	9;34
		1200	284/6T	01512ET3E284T-W22G	3,601	N1	402	1.25	17.9	91.7	27.929	208-230/460	34
20	15	3600	254/6T	02036ET3E256T-SG	2,356	RSP	256	1.15	22.7	91.0	23.346	208-230/460	9;34
		1800	254/6T	02018ET3E256T-SG	2,198	RSP	271	1.15	24.5	92.4	23.346	208-230/460	9;34
		1200	284/6T	02012ET3E286T-W22G	4,272	N1	450	1.25	24.2	91.7	27.929	208-230/460	34
25	18.5	3600	284/6TS	02536ET3E284TS-W22G	3,308	N1	400	1.25	28.5	91.7	26.557	208-230/460	34
		1800	284/6T	02518ET3E284T-W22G	3,053	N1	433	1.25	29.5	93.6	27.929	208-230/460	34
		1200	324/6T	02512ET3E324T-W22G	5,137	N1	569	1.25	30.4	93.0	31.116	208-230/460	34
30	22	3600	284/6TS	03036ET3E286TS-W22G	3,871	N1	430	1.25	33.8	91.7	26.557	208-230/460	34
		1800	284/6T	03018ET3E286T-W22G	3,533	N1	482	1.25	35.1	93.6	27.929	208-230/460	34
		1200	324/6T	03012ET3E326T-W22G	5,673	N1	621	1.25	35.8	93.0	31.116	208-230/460	34
40	30	3600	324/6TS	04036ET3E324TS-W22G	5,125	N1	572	1.25	45.8	92.4	29.616	208-230/460	34
		1800	324/6T	04018ET3E324T-W22G	4,578	N1	595	1.25	48.2	94.1	31.116	208-230/460	34
		1200	364/5T	04012ET3E364T-W22G	8,124	N1	950	1.25	46.5	94.1	34.251	208-230/460	34
50	37	3600	324/6TS	05036ET3E326TS-W22G	5,716	N1	605	1.25	56.1	93.0	29.616	208-230/460	34
		1800	324/6T	05018ET3E326T-W22G	5,500	N1	634	1.25	59.2	94.5	31.116	208-230/460	34
		1200	364/5T	05012ET3E365T-W22G	9,358	N1	1009	1.25	57.4	94.1	34.251	208-230/460	34
60	45	3600	364/5TS	06036ET3E364TS-W22G	8,392	N1	954	1.25	67.0	93.6	32.276	208-230/460	34
		1800	364/5T	06018ET3E364T-W22G	8,229	N1	1027	1.25	68.3	95.0	34.251	208-230/460	34
75	55	3600	364/5TS	07536ET3E365TS-W22G	9,931	N1	965	1.25	81.9	93.6	32.276	208-230/460	34
		1800	364/5T	07518ET3E365T-W22G	9,545	N1	1044	1.25	84.1	95.4	34.251	208-230/460	34
100	75	1800	404/5T	10018ET3E405T-W22G	12,889	N1	1292	1.25	111	95.4	39.730	208-230/460	34

Refer to electrical and mechanical data sections for additional technical information. Please refer to back cover for description of "NOTES"

For detailed specifications, data sheets, drawings and performance curves visit http://catalog.wegelectric.com

Data subject to change without notice.



HVAC MOTORS - WITH INTERNAL AEGIS® SGR

ODP – Three-Phase – Foot Mount

HP	kW	RPM	NEMA Frame	Catalog Number	List Price	Mult. Symbol	Approx. Shipping Weight (lbs)	Service Factor	FL Amps @ High	FL. Eff (%)	"C" Dimension (in)	Voltage (V)	Notes
1	0.75	1800	143/5T	00118OT3E143T-SG	530	N1B	39	1.15	1.51	85.5	11.181	208-230/460	9;34
		1200	143/5T	00112OT3E145T-SG	586	N1B	40	1.15	1.65	82.5	11.181	208-230/460	9;34
1.5	1.1	3600	143/5T	00156OT3E143T-SG	582	N1B	34	1.15	1.85	84.0	11.181	208-230/460	9;34
		1800	143/5T	00158OT3E145T-SG	589	N1B	47	1.15	2.07	86.5	12.362	208-230/460	9;34
		1200	182/4T	00152OT3E182T-SG	758	N1B	63	1.15	2.25	86.5	13.957	208-230/460	9;34
2	1.5	3600	143/5T	00236OT3E145T-SG	627	N1B	42	1.15	2.42	85.5	11.969	208-230/460	9;34
		1800	143/5T	00218OT3E145T-SG	632	N1B	44	1.15	2.69	86.5	12.362	208-230/460	9;34
		1200	182/4T	00212OT3E184T-SG	767	N1B	73	1.15	2.95	87.5	14.744	208-230/460	9;34
3	2.2	3600	143/5T	00336OT3E145T-SG	685	N1B	45	1.15	3.59	85.5	12.362	208-230/460	9;34
		1800	182/4T	00318OT3E182T-SG	694	N1B	73	1.15	3.86	89.5	15.138	208-230/460	9;34
		1200	213/5T	00312OT3E213T-SG	975	N1B	110	1.15	4.16	88.5	16.575	208-230/460	9;34
5	3.7	3600	182/4T	00536OT3E182T-SG	821	N1B	66	1.15	6.10	86.5	14.764	208-230/460	9;34
		1800	182/4T	00518OT3E184T-SG	800	N1B	87	1.15	6.33	89.5	16.319	208-230/460	9;34
		1200	213/5T	00512OT3E215T-SG	1,257	N1B	129	1.15	6.74	89.5	16.969	208-230/460	9;34
7.5	5.5	3600	182/4T	00736OT3E184T-SG	1,090	N1B	77	1.15	8.67	88.5	15.138	208-230/460	9;34
		1800	213/5T	00718OT3E213T-SG	1,110	N1B	128	1.15	9.14	91.0	16.575	208-230/460	9;34
		1200	254/6T	00712OT3E254T-SG	1,747	N1B	231	1.15	10.2	90.2	20.472	208-230/460	9;34
10	7.5	3600	213/5T	01036OT3E213T-SG	1,281	N1B	128	1.15	12.0	89.5	16.969	208-230/460	9;34
		1800	213/5T	01018OT3E215T-SG	1,302	N1B	149	1.15	12.4	91.7	17.756	208-230/460	9;34
		1200	254/6T	01012OT3E256T-SG	1,997	N1B	254	1.15	13.9	91.7	20.472	208-230/460	9;34
15	11	3600	213/5T	01536OT3E215T-SG	1,692	N1B	143	1.15	17.2	90.2	17.756	208-230/460	9;34
		1800	254/6T	01518OT3E254T-SG	1,757	N1B	220	1.15	18.3	93.0	20.472	208-230/460	9;34
		1200	284T	01512OT3E284T-G	2,722	N1B	360	1.15	17.7	91.7	23.386	208-230/460	34
20	15	3600	254/6T	02036OT3E254T-SG	2,040	N1B	196	1.15	23.8	91.0	20.472	208-230/460	9;34
		1800	254/6T	02018OT3E256T-SG	2,112	N1B	243	1.15	24.7	93.0	20.472	208-230/460	9;34
		1200	286T	02012OT3E286T-G	3,344	N1B	418	1.15	24.0	92.4	24.882	208-230/460	34
25	18.5	3600	254/6T	02536OT3E256T-SG	2,419	N1B	219	1.15	29.1	91.7	20.472	208-230/460	9;34
		1800	284T	02518OT3E284T-G	2,470	N1B	372	1.15	29.9	93.6	23.386	208-230/460	34
		1200	324T	02512OT3E324T-G	3,919	N1B	556	1.15	30.4	93.0	26.181	208-230/460	34
30	22	3600	284TS	03036OT3E284TS-G	2,797	N1B	345	1.15	35.2	92.4	22.000	208-230/460	34
		1800	286T	03018OT3E286T-G	2,840	N1B	433	1.15	35.4	94.1	24.882	208-230/460	34
		1200	326T	03012OT3E326T-G	4,290	N1B	578	1.15	36.0	93.6	27.667	208-230/460	34
40	30	3600	286TS	04036OT3E286TS-G	3,618	N1B	390	1.15	47.1	93.0	23.504	208-230/460	34
		1800	324T	04018OT3E324T-G	3,495	N1B	554	1.15	48.2	94.1	26.181	208-230/460	34
		1200	364/5T	04012OT3E364T-G	6,384	N1B	910	1.15	48.2	94.1	29.764	208-230/460	34
50	37	1800	326T	05018OT3E326T-G	4,188	N1B	583	1.15	61.4	94.5	27.667	208-230/460	34
60	45	1800	364/5T	06018OT3E364T-G	5,283	N1B	881	1.15	69.9	95.0	29.764	208-230/460	34
75	55	1800	364/5T	07518OT3E365T-G	6,498	N1B	950	1.15	85.5	95.0	29.764	208-230/460	34
100	75	1800	404/5T	10018OT3E404T-G	8,341	N1B	1111	1.15	115	95.4	34.133	208-230/460	34

Refer to electrical and mechanical data sections for additional technical information. Please refer to back cover for description of “NOTES”

For detailed specifications, data sheets, drawings and performance curves visit http://catalog.wegelectric.com

Air Handling Motors

COOLING TOWER MOTORS

Three-Phase TEFC & TEAO



WEG's cooling tower motors are designed for operation in 100% humidity and the most corrosive environments. They designed to operate in either horizontal or vertical mounting.

WEG's W22 cast iron platform has an improved cooling system and solid feet for cooler operation and reduced vibration and noise extending the life of the motor.

Standard Features:

- 50/60 Hz rated (380V on Nameplate - 400/415 Available - Same Horse Power at 50 Hz with a 1.0 service factor)
- Class F insulation (Impregnation Resin and magnet Wire are class H)
- Standard mounting is F2. F1 mounted motors are identified in the part number. (Both configurations are convertible). Frames 447T and up can easily be converted by simply rotating the terminal box adapter
- Stainless Steel Nameplate - Laser etched with high contrast background
- Double Sealed bearings

Features that make a difference:

- 1.25 service factor
- Multiple endbell drain plugs for shaft up, down or horizontal mounting
- Drain plugs in terminal box
- Rubber lead separator between terminal box and frame
- Internally and externally epoxy painted
- Double sealed bearings
- Double impregnation and bake

Inverter Rated:
1000:1 for variable torque

ADDITIONAL TECHNICAL DATA

ELECTRICAL DATA: B-6; B-73
MECHANICAL DATA: C-44 to C-50



COOLING TOWER MOTORS – THREE-PHASE

TEFC – Three-Phase – Foot Mount – NEMA Premium

HP	kW	RPM	NEMA Frame	Catalog Number	List Price	Mult. Symbol	Approx. Shipping Weight (lbs)	Service Factor	FL Amps @ High	FL. Eff (%)	"C" Dimension (in)	Voltage (V)	Notes
		1800	143T	00118ET3ECT143TF1-W2	647	L1	49	1.25	1.41	85.5	12.346	208-230/460	
		1800	143T	00118ET3ECT143T-W22	647	L1	49	1.25	1.41	85.5	12.346	208-230/460	7
		1800	143T	00118ET3PCT143T-W22	647	L1	48	1.25	3.24	85.5	12.346	200	7
1	0.75	1200	145T	00112ET3ECT145TF1-W2	728	L1	56	1.25	1.73	82.5	13.346	208-230/460	
		1200	145T	00112ET3ECT145T-W22	728	L1	57	1.25	1.73	82.5	13.346	208-230/460	7
		1200	145T	00112ET3PCT145TF1-W2	728	L1	56	1.25	3.97	82.5	13.346	200	
		1200	145T	00112ET3PCT145T-W22	728	L1	57	1.25	3.97	82.5	13.346	200	7
		1800	145T	00158ET3ECT145TF1-W2	676	L1	56	1.25	2.02	86.5	13.346	208-230/460	
		1800	145T	00158ET3ECT145T-W22	676	L1	56	1.25	2.02	86.5	13.346	208-230/460	7
		1800	145T	00158ET3PCT145TF1-W2	676	L1	56	1.25	4.65	86.5	13.346	200	
1.5	1.1	1800	145T	00158ET3PCT145T-W22	676	L1	56	1.25	4.65	86.5	13.346	200	7
		1200	182T	00152ET3ECT182T-W22	903	L1	97	1.25	2.39	87.5	14.860	208-230/460	7
		1200	182T	00152ET3PCT182T-W22	903	L1	79	1.25	5.49	87.5	14.860	200	7
		1800	145T	00218ET3ECT145TF1-W2	752	L1	59	1.25	2.61	86.5	13.346	208-230/460	
		1800	145T	00218ET3ECT145T-W22	752	L1	59	1.25	2.61	86.5	13.346	208-230/460	7
		1800	145T	00218ET3HCT145T-W22	752	L1	58	1.25	2.09	86.5	13.346	575	7
2	1.5	1800	145T	00218ET3PCT145TF1-W2	752	L1	58	1.25	6.00	86.5	13.346	200	
		1800	145T	00218ET3PCT145T-W22	752	L1	58	1.25	6.00	86.5	13.346	200	7
		1200	184T	00212ET3ECT184T-W22	981	L1	110	1.25	3.23	88.5	15.860	208-230/460	7
		1200	184T	00212ET3PCT184T-W22	981	L1	97	1.25	7.42	88.5	15.860	200	7
		1800	182T	00318ET3ECT182TF1-W2	781	L1	98	1.25	3.88	89.5	14.860	208-230/460	
		1800	182T	00318ET3ECT182T-W22	781	L1	98	1.25	3.88	89.5	14.860	208-230/460	7
		1800	182T	00318ET3HCT182TF1-W2	781	L1	97	1.25	3.10	89.5	14.860	575	
		1800	182T	00318ET3HCT182T-W22	781	L1	97	1.25	3.10	89.5	14.860	575	7
3	2.2	1800	182T	00318ET3PCT182TF1-W2	781	L1	97	1.25	8.92	89.5	14.860	200	
		1800	182T	00318ET3PCT182T-W22	781	L1	97	1.25	8.92	89.5	14.860	200	7
		1200	213T	00312ET3ECT213T-W22	1,329	L1	152	1.25	4.41	89.5	18.021	208-230/460	7
		1200	213T	00312ET3PCT213T-W22	1,329	L1	153	1.25	10.1	89.5	18.021	200	7
		1800	184T	00518ET3ECT184TF1-W2	894	L1	105	1.25	6.45	89.5	15.860	208-230/460	
		1800	184T	00518ET3ECT184T-W22	894	L1	105	1.25	6.45	89.5	15.860	208-230/460	7
		1800	184T	00518ET3HCT184TF1-W2	894	L1	104	1.25	5.16	89.5	15.860	575	
		1800	184T	00518ET3HCT184T-W22	894	L1	104	1.25	5.16	89.5	15.860	575	7
5	3.7	1800	184T	00518ET3PCT184TF1-W2	894	L1	105	1.25	14.8	89.5	15.860	200	
		1800	184T	00518ET3PCT184T-W22	894	L1	105	1.25	14.8	89.5	15.860	200	7
		1200	215T	00512ET3ECT215TF1-W2	1,517	L1	175	1.25	6.83	89.5	19.517	208-230/460	
		1200	215T	00512ET3ECT215T-W22	1,517	L1	175	1.25	6.83	89.5	19.517	208-230/460	7
		1200	215T	00512ET3PCT215T-W22	1,517	L1	175	1.25	15.7	89.5	19.517	200	7

Continued on next page

Refer to electrical and mechanical data sections for additional technical information. Please refer to back cover for description of "NOTES"

For detailed specifications, data sheets, drawings and performance curves visit http://catalog.wegelectric.com

Data subject to change without notice.

COOLING TOWER MOTORS – THREE-PHASE

TEFC – Three-Phase – Foot Mount – NEMA Premium *continued*

HP	kW	RPM	NEMA Frame	Catalog Number	List Price	Mult. Symbol	Approx. Shipping Weight (lbs)	Service Factor	FL Amps @ High	FL. Eff (%)	"C" Dimension (in)	Voltage (V)	Notes
7.5	5.5	1800	213T	00718ET3ECT213TF1-W2	1,293	L1	165	1.25	9.00	91.7	18.021	208-230/460	
		1800	213T	00718ET3ECT213T-W22	1,293	L1	165	1.25	9.00	91.7	18.021	208-230/460	7
		1800	213T	00718ET3HCT213TF1-W2	1,293	L1	164	1.25	7.20	91.7	18.021	575	
		1800	213T	00718ET3HCT213T-W22	1,293	L1	164	1.25	7.20	91.7	18.021	575	7
		1800	213T	00718ET3PCT213TF1-W2	1,293	L1	164	1.25	20.7	91.7	18.021	200	
		1800	213T	00718ET3PCT213T-W22	1,293	L1	164	1.25	20.7	91.7	18.021	200	7
		1200	254T	00712ET3ECT254T-W22	2,433	L1	297	1.25	9.48	91.0	23.213	208-230/460	7
		1200	254T	00712ET3HCT254T-W22	2,433	L1	282	1.25	7.58	91.0	23.213	575	7
		1200	254T	00712ET3PCT254T-W22	2,433	L1	297	1.25	21.8	91.0	23.213	200	7
10	7.5	1800	215T	01018ET3ECT215TF1-W2	1,475	L1	188	1.25	12.4	91.7	19.517	208-230/460	
		1800	215T	01018ET3ECT215T-W22	1,475	L1	189	1.25	12.4	91.7	19.517	208-230/460	7
		1800	215T	01018ET3HCT215TF1-W2	1,475	L1	187	1.25	9.92	91.7	19.517	575	
		1800	215T	01018ET3HCT215T-W22	1,475	L1	187	1.25	9.92	91.7	19.517	575	7
		1800	215T	01018ET3PCT215TF1-W2	1,475	L1	189	1.25	28.5	91.7	19.517	200	
		1800	215T	01018ET3PCT215T-W22	1,475	L1	187	1.25	28.5	91.7	19.517	200	7
		1200	256T	01012ET3ECT256TF1-W2	2,751	L1	326	1.25	12.9	91.0	24.945	208-230/460	
		1200	256T	01012ET3ECT256T-W22	2,751	L1	326	1.25	12.9	91.0	24.945	208-230/460	7
		1200	256T	01012ET3PCT256T-W22	2,751	L1	326	1.25	29.7	91.0	24.945	200	7
15	11	1800	254T	01518ET3ECT254TF1-W2	2,122	L1	333	1.25	18.0	92.4	23.213	208-230/460	
		1800	254T	01518ET3ECT254T-W22	2,122	L1	333	1.25	18.0	92.4	23.213	208-230/460	7
		1800	254T	01518ET3HCT254TF1-W2	2,122	L1	332	1.25	14.4	92.4	23.213	575	
		1800	254T	01518ET3HCT254T-W22	2,122	L1	332	1.25	14.4	92.4	23.213	575	7
		1800	254T	01518ET3PCT254TF1-W2	2,122	L1	333	1.25	41.4	92.4	23.213	200	
		1800	254T	01518ET3PCT254T-W22	2,122	L1	333	1.25	41.4	92.4	23.213	200	7
		1200	284T	01512ET3ECT284T-W22	3,850	L1	410	1.25	17.9	91.7	26.433	208-230/460	7
		1200	284T	01512ET3PCT284T-W22	3,850	L1	409	1.25	41.2	91.7	26.433	200	7
20	15	1800	256T	02018ET3ECT256TF1-W2	2,549	L1	368	1.25	24.1	93.0	24.945	208-230/460	
		1800	256T	02018ET3ECT256T-W22	2,549	L1	369	1.25	24.1	93.0	24.945	208-230/460	7
		1800	256T	02018ET3HCT256TF1-W2	2,549	L1	367	1.25	19.3	93.0	24.945	575	
		1800	256T	02018ET3HCT256T-W22	2,549	L1	367	1.25	19.3	93.0	24.945	575	7
		1800	256T	02018ET3PCT256TF1-W2	2,549	L1	369	1.25	55.4	93.0	24.945	200	
		1800	256T	02018ET3PCT256T-W22	2,549	L1	369	1.25	55.4	93.0	24.945	200	7
		1200	286T	02012ET3ECT286T-W22	4,635	L1	460	1.25	24.2	91.7	27.929	208-230/460	7
		1200	286T	02012ET3PCT286T-W22	4,635	L1	503	1.25	55.7	91.7	27.929	200	7

Continued on next page

Refer to electrical and mechanical data sections for additional technical information. Please refer to back cover for description of "NOTES"

For detailed specifications, data sheets, drawings and performance curves visit http://catalog.wegelectric.com

Data subject to change without notice.

TEFC – Three-Phase – Foot Mount – NEMA Premium *continued*

HP	kW	RPM	NEMA Frame	Catalog Number	List Price	Mult. Symbol	Approx. Shipping Weight (lbs)	Service Factor	FL Amps @ High	FL. Eff (%)	"C" Dimension (in)	Voltage (V)	Notes
25	18.5	1800	284T	02518ET3ECT284TF1-W2	3,236	L1	435	1.25	29.5	93.6	26.433	208-230/460	
		1800	284T	02518ET3ECT284T-W22	3,236	L1	435	1.25	29.5	93.6	26.433	208-230/460	7
		1800	284T	02518ET3HCT284TF1-W2	3,236	L1	434	1.25	23.6	93.6	26.433	575	
		1800	284T	02518ET3HCT284T-W22	3,236	L1	434	1.25	23.6	93.6	26.433	575	7
		1800	284T	02518ET3PCT284TF1-W2	3,236	L1	436	1.25	67.9	93.6	26.433	200	
		1800	284T	02518ET3PCT284T-W22	3,236	L1	436	1.25	67.9	93.6	26.433	200	7
		1200	324T	02512ET3ECT324T-W22	5,543	L1	580	1.25	30.4	93.0	29.620	208-230/460	7
		1200	324T	02512ET3PCT324T-W22	5,543	L1	579	1.25	69.9	93.0	29.620	200	7
30	22	1800	286T	03018ET3ECT286TF1-W2	3,738	L1	490	1.25	35.1	93.6	27.929	208-230/460	
		1800	286T	03018ET3ECT286T-W22	3,738	L1	490	1.25	35.1	93.6	27.929	208-230/460	7
		1800	286T	03018ET3HCT286TF1-W2	3,738	L1	489	1.25	28.1	93.6	27.929	575	
		1800	286T	03018ET3HCT286T-W22	3,738	L1	489	1.25	28.1	93.6	27.929	575	7
		1800	286T	03018ET3PCT286TF1-W2	3,738	L1	489	1.25	80.7	93.6	27.929	200	
		1800	286T	03018ET3PCT286T-W22	3,738	L1	489	1.25	80.7	93.6	27.929	200	7
		1200	326T	03012ET3ECT326T-W22	6,064	L1	673	1.25	35.8	93.0	31.116	208-230/460	7
		1200	326T	03012ET3PCT326T-W22	6,064	L1	673	1.25	82.3	93.0	31.116	200	7
40	30	1800	324T	04018ET3ECT324TF1-W2	4,805	L1	603	1.25	48.2	94.1	29.620	208-230/460	
		1800	324T	04018ET3ECT324T-W22	4,805	L1	603	1.25	48.2	94.1	29.620	208-230/460	7
		1800	324T	04018ET3HCT324TF1-W2	4,805	L1	603	1.25	38.6	94.1	29.620	575	
		1800	324T	04018ET3HCT324T-W22	4,805	L1	603	1.25	38.6	94.1	29.620	575	7
		1800	324T	04018ET3PCT324TF1-W2	4,805	L1	582	1.25	111	94.1	29.620	200	
		1800	324T	04018ET3PCT324T-W22	4,805	L1	582	1.25	111	94.1	29.620	200	7
		1200	364/5T	04012ET3ECT364T-W22	8,376	L1	937	1.25	46.5	94.1	34.251	208-230/460	7
		1200	364/5T	04012ET3PCT364T-W22	8,376	L1	1076	1.25	107	94.1	34.251	200	7
50	37	1800	326T	05018ET3ECT326T-W22	5,865	L1	644	1.25	59.2	94.5	31.116	208-230/460	7
		1800	326T	05018ET3PCT326T-W22	5,865	L1	662	1.25	136	94.5	31.116	200	7
		1200	364/5T	05012ET3ECT365T-W22	9,625	L1	982	1.25	57.4	94.1	34.251	208-230/460	7
		1200	364/5T	05012ET3PCT365T-W22	9,625	L1	1127	1.25	132	94.1	34.251	200	7
60	45	1800	364/5T	06018ET3ECT364T-W22	8,497	L1	1009	1.25	68.3	95.0	34.251	208-230/460	7
		1800	364/5T	06018ET3PCT364T-W22	8,497	L1	1036	1.25	157	95.0	34.251	200	7
		1200	404/5T	06012ET3ECT404T-W22	11,861	L1	1226	1.25	69.5	94.5	39.730	208-230/460	7
		1200	404/5T	06012ET3PCT404T-W22	11,861	L1	1346	1.25	160	94.5	39.730	200	7
75	55	1800	364/5T	07518ET3ECT365T-W22	9,924	L1	1007	1.25	84.1	95.4	34.251	208-230/460	7
		1800	364/5T	07518ET3PCT365T-W22	9,924	L1	1047	1.25	193	95.4	34.251	200	7
		1200	404/5T	07512ET3ECT405T-W22	13,626	L1	1259	1.25	84.9	94.5	39.730	208-230/460	7
		1200	404/5T	07512ET3PCT405T-W22	13,626	L1	1478	1.25	195	94.5	39.730	200	7
100	75	1800	404/5T	10018ET3ECT405T-W22	13,092	L1	1308	1.25	111	95.4	39.730	208-230/460	7
		1800	404/5T	10018ET3PCT405T-W22	13,092	L1	1302	1.25	255	95.4	39.730	200	7
		1200	444/5T	10012ET3ECT444T-W22	17,194	L1	2006	1.25	121	95.0	44.950	208-230/460	7
		1200	444/5T	10012ET3PCT444T-W22	17,194	L1	2006	1.25	278	95.0	44.950	200	7

Refer to electrical and mechanical data sections for additional technical information. Please refer to back cover for description of "NOTES"

For detailed specifications, data sheets, drawings and performance curves visit http://catalog.wegelectric.com

COOLING TOWER MOTORS – THREE-PHASE



TEAO – Three-Phase – Foot Mount – NEMA Premium

HP	kW	RPM	NEMA Frame	Catalog Number	List Price	Mult. Symbol	Approx. Shipping Weight (lbs)	Service Factor	FL Amps @ High	FL. Eff (%)	"C" Dimension (in)	Voltage (V)	Notes
1	0.75	1800	143T	00118AT3PCT143T-W22	666	L1	54	1.25	3.24	85.5	12.346	200	7
1.5	1.1	1800	145T	00158AT3PCT145T-W22	696	L1	56	1.25	4.65	86.5	13.346	200	7
2	1.5	1800	145T	00218AT3ECT145TF1-W2	775	L1	58	1.25	2.61	86.5	13.346	208-230/460	
		1800	145T	00218AT3ECT145T-W22	775	L1	58	1.25	2.61	86.5	13.346	208-230/460	7
		1800	145T	00218AT3PCT145T-W22	775	L1	58	1.25	6.00	86.5	13.346	200	7
		1200	184T	00212AT3ECT184TF1-W2	1,010	L1	97	1.25	2.58	88.5	15.860	575	
		1200	184T	00212AT3HCT184TF1-W2	1,010	L1	97	1.25	2.58	88.5	15.860	575	
		1200	184T	00212AT3PCT184TF1-W2	1,010	L1	97	1.25	2.58	88.5	15.860	575	
3	2.2	1800	182T	00318AT3ECT182TF1-W2	804	L1	96	1.25	3.88	89.5	14.860	208-230/460	
		1800	182T	00318AT3ECT182T-W22	804	L1	96	1.25	3.88	89.5	14.860	208-230/460	7
		1800	182T	00318AT3HCT182T-W22	804	L1	96	1.25	3.10	89.5	14.860	575	7
		1800	182T	00318AT3PCT182TF1-W2	804	L1	99	1.25	8.92	89.5	14.860	200	
		1800	182T	00318AT3PCT182T-W22	804	L1	96	1.25	8.92	89.5	14.860	200	7
		1200	213T	00312AT3ECT213TF1-W2	1,369	L1	134	1.25	4.41	89.5	18.021	208-230/460	
		1200	213T	00312AT3PCT213TF1-W2	1,369	L1	134	1.25	10.1	89.5	18.021	200	
5	3.7	1800	184T	00518AT3ECT184TF1-W2	921	L1	104	1.25	6.45	89.5	15.860	208-230/460	
		1800	184T	00518AT3ECT184T-W22	921	L1	104	1.25	6.45	89.5	15.860	208-230/460	7
		1800	184T	00518AT3HCT184TF1-W2	921	L1	108	1.25	5.16	89.5	15.860	575	
		1800	184T	00518AT3HCT184T-W22	921	L1	104	1.25	5.16	89.5	15.860	575	7
		1800	184T	00518AT3PCT184TF1-W2	921	L1	104	1.25	14.8	89.5	15.860	200	
		1800	184T	00518AT3PCT184T-W22	921	L1	108	1.25	14.8	89.5	15.860	200	7
		1200	215T	00512AT3ECT215TF1-W2	1,563	L1	175	1.25	6.83	89.5	19.517	208-230/460	
		1200	215T	00512AT3HCT215TF1-W2	1,563	L1	175	1.25	5.46	89.5	19.517	575	
		1200	215T	00512AT3PCT215TF1-W2	1,563	L1	175	1.25	15.7	89.5	19.517	200	
7.5	5.5	1800	213T	00718AT3ECT213TF1-W2	1,332	L1	165	1.25	9.00	91.7	18.021	208-230/460	
		1800	213T	00718AT3ECT213T-W22	1,332	L1	165	1.25	9.00	91.7	18.021	208-230/460	7
		1800	213T	00718AT3HCT213TF1-W2	1,332	L1	165	1.25	7.20	91.7	18.021	575	
		1800	213T	00718AT3HCT213T-W22	1,332	L1	165	1.25	7.20	91.7	18.021	575	7
		1800	213T	00718AT3PCT213TF1-W2	1,332	L1	165	1.25	20.7	91.7	18.021	200	
		1800	213T	00718AT3PCT213T-W22	1,332	L1	165	1.25	20.7	91.7	18.021	200	7
		1200	254T	00712AT3ECT254TF1-W2	2,506	L1	282	1.25	9.48	91.0	23.213	208-230/460	
		1200	254T	00712AT3PCT254TF1-W2	2,506	L1	282	1.25	21.8	91.0	23.213	200	

Continued on next page

Refer to electrical and mechanical data sections for additional technical information. Please refer to back cover for description of "NOTES"

For detailed specifications, data sheets, drawings and performance curves visit http://catalog.wegelectric.com

Data subject to change without notice.

TEAO – Three-Phase – Foot Mount – NEMA Premium *continued*

HP	kW	RPM	NEMA Frame	Catalog Number	List Price	Mult. Symbol	Approx. Shipping Weight (lbs)	Service Factor	FL Amps @ High	FL. Eff (%)	"C" Dimension (in)	Voltage (V)	Notes
10	7.5	1800	215T	01018AT3ECT215TF1-W2	1,519	L1	183	1.25	12.4	91.7	19.517	208-230/460	
		1800	215T	01018AT3ECT215T-W22	1,519	L1	183	1.25	12.4	91.7	19.517	208-230/460	7
		1800	215T	01018AT3HCT215TF1-W2	1,519	L1	182	1.25	9.92	91.7	19.517	575	
		1800	215T	01018AT3HCT215T-W22	1,519	L1	182	1.25	9.92	91.7	19.517	575	7
		1800	215T	01018AT3PCT215TF1-W2	1,519	L1	183	1.25	28.5	91.7	19.517	200	
		1800	215T	01018AT3PCT215T-W22	1,519	L1	183	1.25	28.5	91.7	19.517	200	7
		1200	256T	01012AT3ECT256TF1-W2	2,919	L1	316	1.25	12.9	91.0	24.945	208-230/460	
		1200	256T	01012AT3PCT256TF1-W2	2,919	L1	316	1.25	29.7	91.0	24.945	200	
		1200	256T	01012AT3PCT256T-W22	2,919	L1	316	1.25	29.7	91.0	24.945	200	7
15	11	1800	254T	01518AT3ECT254TF1-W2	2,186	L1	318	1.25	18.0	92.4	23.213	208-230/460	
		1800	254T	01518AT3ECT254T-W22	2,186	L1	318	1.25	18.0	92.4	23.213	208-230/460	7
		1800	254T	01518AT3HCT254TF1-W2	2,186	L1	277	1.25	14.4	92.4	23.213	575	
		1800	254T	01518AT3HCT254T-W22	2,186	L1	317	1.25	14.4	92.4	23.213	575	7
		1800	254T	01518AT3PCT254TF1-W2	2,186	L1	317	1.25	41.4	92.4	23.213	200	
		1800	254T	01518AT3PCT254T-W22	2,186	L1	317	1.25	41.4	92.4	23.213	200	7
20	15	1800	256T	02018AT3ECT256TF1-W2	2,625	L1	351	1.25	24.1	93.0	24.945	208-230/460	
		1800	256T	02018AT3ECT256T-W22	2,625	L1	351	1.25	24.1	93.0	24.945	208-230/460	7
		1800	256T	02018AT3HCT256TF1-W2	2,625	L1	350	1.25	19.3	93.0	24.945	575	
		1800	256T	02018AT3HCT256T-W22	2,625	L1	324	1.25	19.3	93.0	24.945	575	7
		1800	256T	02018AT3PCT256TF1-W2	2,625	L1	352	1.25	55.4	93.0	24.945	200	
		1800	256T	02018AT3PCT256T-W22	2,625	L1	352	1.25	55.4	93.0	24.945	200	7
25	18.5	1800	284T	02518AT3ECT284TF1-W2	3,333	L1	419	1.25	29.5	93.6	26.433	208-230/460	
		1800	284T	02518AT3ECT284T-W22	3,333	L1	419	1.25	29.5	93.6	26.433	208-230/460	7
		1800	284T	02518AT3HCT284TF1-W2	3,333	L1	418	1.25	23.6	93.6	26.433	575	
		1800	284T	02518AT3HCT284T-W22	3,333	L1	418	1.25	23.6	93.6	26.433	575	7
		1800	284T	02518AT3PCT284TF1-W2	3,333	L1	420	1.25	67.9	93.6	26.433	200	
		1800	284T	02518AT3PCT284T-W22	3,333	L1	481	1.25	67.8	93.6	26.433	200	7
		1200	324T	02512AT3ECT324TF1-W2	5,709	L1	605	1.25	30.4	93.0	29.620	208-230/460	
		1200	324T	02512AT3HCT324TF1-W2	5,709	L1	605	1.25	24.3	93.0	29.620	575	
30	22	1800	286T	03018AT3ECT286TF1-W2	3,850	L1	470	1.25	35.1	93.6	27.929	208-230/460	
		1800	286T	03018AT3ECT286T-W22	3,850	L1	470	1.25	35.1	93.6	27.929	208-230/460	7
		1800	286T	03018AT3HCT286TF1-W2	3,850	L1	469	1.25	28.1	93.6	27.929	575	
		1800	286T	03018AT3PCT286TF1-W2	3,850	L1	525	1.25	80.7	93.6	27.929	200	
		1800	286T	03018AT3PCT286T-W22	3,850	L1	470	1.25	80.7	93.6	27.929	200	7
		1200	326T	03012AT3PCT326TF1-W2	6,246	L1	673	1.25	82.3	93.0	31.116	200	
40	30	1800	324T	04018AT3ECT324TF1-W2	4,949	L1	581	1.25	48.2	94.1	29.620	208-230/460	
		1800	324T	04018AT3ECT324T-W22	4,949	L1	581	1.25	48.2	94.1	29.620	208-230/460	7
		1800	324T	04018AT3HCT324TF1-W2	4,949	L1	580	1.25	38.6	94.1	29.620	575	
		1800	324T	04018AT3PCT324TF1-W2	4,949	L1	583	1.25	111	94.1	29.620	200	

Refer to electrical and mechanical data sections for additional technical information. Please refer to back cover for description of "NOTES"

For detailed specifications, data sheets, drawings and performance curves visit http://catalog.wegelectric.com



COOLING TOWER MOTORS – THREE-PHASE
TEFC – Three-Phase – Double speed (1 & 2 Windings) – High Efficiency

HP	kW	RPM	NEMA Frame	Catalog Number	List Price	Mult. Symbol	Approx. Shipping Weight (lbs)	Service Factor	FL Amps @ High	FL. Eff (%)	"C" Dimension (in)	Voltage (V)	Notes
2/0.5	1.5/0.37	1800/900	145T	00289EP3PCT145VF1-W2	929	H1	53	1.15	6.40	82.5	13.346	200	23;30
		1800/900	145T	00289EP3PCT145V-W22	929	H1	56	1.15	6.40	82.5	13.346	200	7;23;30
		1200/600	213T	00226EP3QCT213VF1-W2	2,021	H1	53	1.15	2.87	84.0	18.021	460	23;30
		1200/600	213T	00226EP3QCT213V-W22	2,021	H1	53	1.15	2.87	84.0	18.021	460	7;23;30
3/0.75	2.2/0.55	1800/900	182T	00389EP3PCT182VF1-W2	1,369	H1	100	1.15	9.18	87.5	14.86	200	23;30
		1800/900	182T	00389EP3PCT182V-W22	1,369	H1	100	1.15	9.18	87.5	14.86	200	7;23;30
		1800/900	182T	00389EP3QCT182VF1-W2	1,369	H1	100	1.15	3.99	87.5	14.86	460	23;30
		1800/900	182T	00389EP3QCT182V-W22	1,369	H1	100	1.15	3.99	87.5	14.86	460	7;23;30
		1200/600	215T	00326EP3QCT215V-W22	2,125	H1	100	1.15	4.11	84.0	19.517	460	7;23;30
5/1.25	3.7/0.92	1800/900	184T	00589EP3HCT184VF1-W2	1,471	H1	104	1.15	5.30	87.5	15.86	575	23;30
		1800/900	184T	00589EP3HCT184V-W22	1,471	H1	104	1.15	5.30	87.5	15.86	575	7;23;30
		1800/900	184T	00589EP3PCT184VF1-W2	1,471	H1	104	1.15	15.2	87.5	15.86	200	23;30
		1800/900	184T	00589EP3PCT184V-W22	1,471	H1	104	1.15	15.2	87.5	15.86	200	7;23;30
		1800/900	215T	00589EP3PCT215V2F1-W	2,262	H1	181	1.15	15.1	88.5	19.517	200	22;30
		1800/900	184T	00589EP3QCT184VF1-W2	1,471	H1	104	1.15	6.63	87.5	15.86	460	23;30
		1800/900	184T	00589EP3QCT184V-W22	1,471	H1	104	1.15	6.63	87.5	15.86	460	7;23;30
		1800/900	215T	00589EP3QCT215V2F1-W	2,262	H1	181	1.15	6.55	88.5	19.517	460	22;30
		1800/900	215T	00589EP3QCT215V2-W22	2,262	H1	181	1.15	6.55	88.5	19.517	460	7;22;30
		1200/600	254T	00526EP3QCT254VF1-W2	2,424	H1	104	1.15	7.06	86.5	23.213	460	23;30
		1200/600	254T	00526EP3QCT254V-W22	2,424	H1	104	1.15	7.06	86.5	23.213	460	7;23;30
7.5/1.75	5.5/1.3	1800/900	213T	00789EP3HCT213V-W22	1,672	H1	164	1.15	7.61	88.5	18.021	575	7;23;30
		1800/900	213T	00789EP3PCT213VF1-W2	1,672	H1	164	1.15	21.9	88.5	18.021	200	23;30
		1800/900	213T	00789EP3PCT213V-W22	1,672	H1	164	1.15	21.9	88.5	18.021	200	7;23;30
		1800/900	254T	00789EP3PCT254V2F1-W	2,808	H1	285	1.15	22.4	88.5	23.213	200	22;30
		1800/900	254T	00789EP3PCT254V2-W22	2,808	H1	285	1.15	22.4	88.5	23.213	200	7;22;30
		1800/900	213T	00789EP3QCT213VF1-W2	1,672	H1	164	1.15	9.51	88.5	18.021	460	23;30
		1800/900	213T	00789EP3QCT213V-W22	1,672	H1	164	1.15	9.51	88.5	18.021	460	7;23;30
		1800/900	254T	00789EP3QCT254V2F1-W	2,808	H1	285	1.15	9.75	88.5	23.213	460	22;30
		1800/900	254T	00789EP3QCT254V2-W22	2,808	H1	285	1.15	9.75	88.5	23.213	460	7;22;30
		1200/600	256T	00726EP3QCT256V-W22	2,496	H1	164	1.15	10.1	87.5	24.945	460	7;23;30

Continued on next page

Refer to electrical and mechanical data sections for additional technical information. Please refer to back cover for description of "NOTES"

For detailed specifications, data sheets, drawings and performance curves visit http://catalog.wegelectric.com

Data subject to change without notice.

COOLING TOWER MOTORS – THREE-PHASE
TEFC – Three-Phase – Double speed (1 & 2 Windings) – High Efficiency *continued*

HP	kW	RPM	NEMA Frame	Catalog Number	List Price	Mult. Symbol	Approx. Shipping Weight (lbs)	Service Factor	FL Amps @ High	FL. Eff (%)	"C" Dimension (in)	Voltage (V)	Notes
		1800/900	215T	01089EP3HCT215VF1-W2	1,891	H1	168	1.15	10.4	88.5	19.517	575	23;30
		1800/900	215T	01089EP3HCT215V-W22	1,891	H1	168	1.15	10.4	88.5	19.517	575	7;23;30
		1800/900	215T	01089EP3PCT215VF1-W2	1,891	H1	168	1.15	29.9	88.5	19.517	200	23;30
		1800/900	215T	01089EP3PCT215V-W22	1,891	H1	168	1.15	29.9	88.5	19.517	200	7;23;30
		1800/900	256T	01089EP3PCT256V2F1-W	3,052	H1	329	1.15	29.9	89.5	24.945	200	22;30
10/2.5	7.5/1.85	1800/900	256T	01089EP3PCT256V2-W22	3,052	H1	329	1.15	29.9	89.5	24.945	200	7;22;30
		1800/900	215T	01089EP3QCT215VF1-W2	1,891	H1	175	1.15	13.0	88.5	19.517	460	23;30
		1800/900	215T	01089EP3QCT215V-W22	1,891	H1	168	1.15	13.0	88.5	19.517	460	7;23;30
		1800/900	256T	01089EP3QCT256V2F1-W	3,052	H1	329	1.15	13.0	89.5	24.945	460	22;30
		1800/900	256T	01089EP3QCT256V2-W22	3,052	H1	360	1.15	13.0	89.5	24.945	460	7;22;30
		1200/600	284T	01026EP3QCT284V-W22	3,017	H1	377	1.15	12.2	89.5	24.95	460	7;23;30
		1800/900	254T	01589EP3HCT254VF1-W2	2,572	H1	271	1.15	15.2	89.5	23.213	575	23;30
		1800/900	254T	01589EP3HCT254V-W22	2,572	H1	271	1.15	15.2	89.5	23.213	575	7;23;30
		1800/900	254T	01589EP3PCT254VF1-W2	2,572	H1	271	1.15	43.8	89.5	23.213	200	23;30
		1800/900	254T	01589EP3PCT254V-W22	2,572	H1	271	1.15	43.8	89.5	23.213	200	7;23;30
		1800/900	284T	01589EP3PCT284V2F1-W	3,878	H1	435	1.15	42.9	90.2	26.433	200	22;30
		1800/900	284T	01589EP3PCT284V2-W22	3,878	H1	435	1.15	42.9	90.2	26.433	200	7;22;30
		1800/900	254T	01589EP3QCT254VF1-W2	2,572	H1	315	1.15	19.0	89.5	23.213	460	23;30
		1800/900	254T	01589EP3QCT254V-W22	2,572	H1	271	1.15	19.0	89.5	23.213	460	7;23;30
15/3.75	11/2.8	1800/900	284T	01589EP3QCT284V2F1-W	3,878	H1	435	1.15	18.7	90.2	26.433	460	22;30
		1800/900	284T	01589EP3QCT284V2-W22	3,878	H1	435	1.15	18.7	90.2	26.433	460	7;22;30
		1200/600	286T	01526EP3HCT286VF1-W2	3,274	H1	271	1.15	14.4	90.2	27.929	575	23;30
		1200/600	286T	01526EP3HCT286V-W22	3,274	H1	271	1.15	14.4	90.2	27.929	575	7;23;30
		1200/600	286T	01526EP3PCT286VF1-W2	3,274	H1	271	1.15	41.4	90.2	27.929	200	23;30
		1200/600	286T	01526EP3PCT286V-W22	3,274	H1	271	1.15	41.4	90.2	27.929	200	7;23;30
		1200/600	286T	01526EP3QCT286VF1-W2	3,274	H1	271	1.15	18.0	90.2	27.929	460	23;30
		1200/600	286T	01526EP3QCT286V-W22	3,274	H1	271	1.15	18.0	90.2	27.929	460	7;23;30
		1800/900	256T	02089EP3HCT256VF1-W2	2,923	H1	318	1.15	20.9	90.2	24.945	575	23;30
		1800/900	256T	02089EP3HCT256V-W22	2,923	H1	318	1.15	20.9	90.2	24.945	575	7;23;30
		1800/900	256T	02089EP3PCT256VF1-W2	2,923	H1	354	1.15	60.0	90.2	24.945	200	23;30
		1800/900	256T	02089EP3PCT256V-W22	2,923	H1	318	1.15	60.0	90.2	24.945	200	7;23;30
		1800/900	286T	02089EP3PCT286V2F1-W	4,827	H1	512	1.15	57.3	91.0	27.929	200	22;30
20/5	15/3.7	1800/900	286T	02089EP3PCT286V2-W22	4,827	H1	512	1.15	57.3	91.0	27.929	200	7;22;30
		1800/900	256T	02089EP3QCT256VF1-W2	2,923	H1	354	1.15	26.1	90.2	24.945	460	23;30
		1800/900	256T	02089EP3QCT256V-W22	2,923	H1	318	1.15	26.1	90.2	24.945	460	7;23;30
		1800/900	286T	02089EP3QCT286V2F1-W	4,827	H1	512	1.15	24.9	91.0	27.929	460	22;30
		1800/900	286T	02089EP3QCT286V2-W22	4,827	H1	512	1.15	24.9	91.0	27.929	460	7;22;30
		1200/600	324T	02026EP3QCT324V-W22	4,101	H1	318	1.15	24.8	90.2	29.62	460	7;23;30

Continued on next page

Refer to electrical and mechanical data sections for additional technical information. Please refer to back cover for description of "NOTES"

For detailed specifications, data sheets, drawings and performance curves visit http://catalog.wegelectric.com

COOLING TOWER MOTORS – THREE-PHASE
TEFC – Three-Phase – Double speed
(1 & 2 Windings) – High Efficiency *continued*

HP	kW	RPM	NEMA Frame	Catalog Number	List Price	Mult. Symbol	Approx. Shipping Weight (lbs)	Service Factor	FL Amps @ High	FL. Eff (%)	"C" Dimension (in)	Voltage (V)	Notes
25/6.3	18.5/4.6	1800/900	286T	02589EP3HCT286VF1-W2	4,199	H1	512	1.15	23.5	91.7	27.929	575	23;30
		1800/900	286T	02589EP3HCT286V-W22	4,199	H1	512	1.15	23.5	91.7	27.929	575	7;23;30
		1800/900	286T	02589EP3PCT286VF1-W2	4,199	H1	512	1.15	67.6	91.7	27.929	200	23;30
		1800/900	324T	02589EP3PCT324V2F1-W	5,826	H1	531	1.15	71.1	91.7	29.62	200	22;30
		1800/900	324T	02589EP3PCT324V2-W22	5,826	H1	531	1.15	71.1	91.7	29.62	200	7;22;30
		1800/900	286T	02589EP3QCT286VF1-W2	4,199	H1	498	1.15	29.4	91.7	27.929	460	23;30
		1800/900	286T	02589EP3QCT286V-W22	4,199	H1	512	1.15	29.4	91.7	27.929	460	7;23;30
		1800/900	324T	02589EP3QCT324V2F1-W	5,826	H1	531	1.15	30.9	91.7	29.62	460	22;30
		1800/900	324T	02589EP3QCT324V2-W22	5,826	H1	531	1.15	30.9	91.7	29.62	460	7;22;30
		1200/600	326T	02526EP3QCT326V-W22	6,222	H1	512	1.15	29.9	90.2	31.116	460	7;23;30
30/7.5	22/5.5	1800/900	324T	03089EP3HCT324VF1-W2	4,725	H1	542	1.15	29.7	91.7	29.62	575	23;30
		1800/900	324T	03089EP3HCT324V-W22	4,725	H1	542	1.15	29.7	91.7	29.62	575	7;23;30
		1800/900	324T	03089EP3PCT324VF1-W2	4,725	H1	579	1.15	85.5	91.7	29.62	200	23;30
		1800/900	324T	03089EP3PCT324V-W22	4,725	H1	542	1.15	85.5	91.7	29.62	200	7;23;30
		1800/900	326T	03089EP3PCT326V2F1-W	6,995	H1	625	1.15	85.9	92.4	31.116	200	22;30
		1800/900	326T	03089EP3PCT326V2-W22	6,995	H1	625	1.15	85.9	92.4	31.116	200	7;22;30
		1800/900	324T	03089EP3QCT324VF1-W2	4,725	H1	542	1.15	37.2	91.7	29.62	460	23;30
		1800/900	324T	03089EP3QCT324V-W22	4,725	H1	576	1.15	37.2	91.7	29.62	460	7;23;30
		1800/900	326T	03089EP3QCT326V2F1-W	6,995	H1	625	1.15	37.4	92.4	31.116	460	22;30
		1800/900	326T	03089EP3QCT326V2-W22	6,995	H1	625	1.15	37.4	92.4	31.116	460	7;22;30
		1200/600	364T	03026EP3QCT364V-W22	7,435	H1	542	1.15	35.4	91.7	33.709	460	7;23;30
40/10	30/7.5	1800/900	326T	04089EP3HCT326VF1-W2	5,464	H1	625	1.15	38.3	92.4	31.116	575	23;30
		1800/900	326T	04089EP3HCT326V-W22	5,464	H1	625	1.15	38.3	92.4	31.116	575	7;23;30
		1800/900	326T	04089EP3PCT326VF1-W2	5,464	H1	625	1.15	110	92.4	31.116	200	23;30
		1800/900	326T	04089EP3PCT326V-W22	5,464	H1	625	1.15	110	92.4	31.116	200	7;23;30
		1800/900	364/5T	04089EP3PCT364V2F1-W	8,720	H1	1029	1.15	108	92.4	33.709	200	22;30
		1800/900	364/5T	04089EP3PCT364V2-W22	8,720	H1	1029	1.15	108	92.4	33.709	200	7;22;30
		1800/900	326T	04089EP3QCT326VF1-W2	5,464	H1	625	1.15	47.9	92.4	31.116	460	23;30
		1800/900	326T	04089EP3QCT326V-W22	5,464	H1	625	1.15	47.9	92.4	31.116	460	7;23;30
		1800/900	364/5T	04089EP3QCT364V2F1-W	8,720	H1	1029	1.15	46.8	92.4	33.709	460	22;30
		1800/900	364/5T	04089EP3QCT364V2-W22	8,720	H1	1029	1.15	46.8	92.4	33.709	460	7;22;30
		1200/600	365T	04026EP3QCT365VF1-W2	9,302	H1	625	1.15	47.4	92.4	33.709	460	23;30
		1200/600	365T	04026EP3QCT365V-W22	9,302	H1	625	1.15	47.4	92.4	33.709	460	7;23;30

Continued on next page

Refer to electrical and mechanical data sections for additional technical information. Please refer to back cover for description of "NOTES"

For detailed specifications, data sheets, drawings and performance curves visit http://catalog.wegelectric.com

Data subject to change without notice.

COOLING TOWER MOTORS – THREE-PHASE
TEFC - Three-Phase – Double speed
(1 & 2 Windings) - High Efficiency *continued*

HP	kW	RPM	NEMA Frame	Catalog Number	List Price	Mult. Symbol	Approx. Shipping Weight (lbs)	Service Factor	FL Amps @ High	FL. Eff (%)	"C" Dimension (in)	Voltage (V)	Notes
50/12.5	37/9.2	1800/900	364/5T	05089EP3HCT364VF1-W2	7,526	H1	1051	1.15	47.3	92.4	33.709	575	23;30
		1800/900	364/5T	05089EP3HCT364V-W22	7,526	H1	1051	1.15	47.3	92.4	33.709	575	7;23;30
		1800/900	364/5T	05089EP3PCT364VF1-W2	7,526	H1	1051	1.15	136	92.4	33.709	200	23;30
		1800/900	364/5T	05089EP3PCT364V-W22	7,526	H1	1051	1.15	136	92.4	33.709	200	7;23;30
		1800/900	364/5T	05089EP3PCT365V2F1-W	11,093	H1	1102	1.15	130	93.0	33.709	200	22;30
		1800/900	364/5T	05089EP3PCT365V2-W22	11,093	H1	1102	1.15	130	93.0	33.709	200	7;22;30
		1800/900	364/5T	05089EP3QCT364VF1-W2	7,526	H1	1051	1.15	59.1	92.4	33.709	460	23;30
		1800/900	364/5T	05089EP3QCT364V-W22	7,526	H1	938	1.15	59.1	92.4	33.709	460	7;23;30
		1800/900	364/5T	05089EP3QCT365V2F1-W	11,093	H1	1102	1.15	56.5	93.0	33.709	460	22;30
		1800/900	364/5T	05089EP3QCT365V2-W22	11,093	H1	1102	1.15	56.5	93.0	33.709	460	7;22;30
		1200/600	364/5T	05026EP3QCT365VF1-W2	11,051	H1	1051	1.15	59.6	91.7	33.709	460	23;30
		1200/600	364/5T	05026EP3QCT365V-W22	11,051	H1	1051	1.15	59.6	91.7	33.709	460	7;23;30
60/15	45/11	1800/900	364/5T	06089EP3PCT365VF1-W2	11,068	H1	1102	1.15	162	93.0	33.709	200	23;30
		1800/900	364/5T	06089EP3PCT365V-W22	11,068	H1	1102	1.15	162	93.0	33.709	200	7;23;30
		1800/900	364/5T	06089EP3QCT365VF1-W2	11,068	H1	1102	1.15	70.6	93.0	33.709	460	23;30
		1800/900	364/5T	06089EP3QCT365V-W22	11,068	H1	1102	1.15	70.6	93.0	33.709	460	7;23;30
75/18.5	55/13.6	1800/900	404/5T	07589EP3PCT404VF1-W2	14,226	H1	1245	1.15	196	93.0	38.077	200	23;30
		1800/900	404/5T	07589EP3PCT404V-W22	14,226	H1	1245	1.15	196	93.0	38.077	200	7;23;30
		1800/900	404/5T	07589EP3QCT404VF1-W2	14,226	H1	1293	1.15	85.3	93.0	38.077	460	23;30
		1800/900	404/5T	07589EP3QCT404V-W22	14,226	H1	1245	1.15	85.3	93.0	38.077	460	7;23;30
100/25	75/18.5	1800/900	444/5T	10089EP3PCT444VF1-W2	16,398	H1	2149	1.15	274	94.1	43.776	200	23;30
		1800/900	444/5T	10089EP3PCT444V-W22	16,398	H1	2149	1.15	274	94.1	43.776	200	7;23;30
		1800/900	444/5T	10089EP3QCT444VF1-W2	16,398	H1	2149	1.15	119	94.1	43.776	460	23;30
		1800/900	444/5T	10089EP3QCT444V-W22	16,398	H1	2131	1.15	119	94.1	43.776	460	7;23;30

Refer to electrical and mechanical data sections for additional technical information. Please refer to back cover for description of “NOTES”

For detailed specifications, data sheets, drawings and performance curves visit http://catalog.wegelectric.com

Air Handling Motors

PAD MOUNT MOTORS

Three-Phase TEAO - NEMA Premium



These TEAO motors are supplied with a detached terminal box and extended leads for remote installation.

Standard Features:

- 50/60 Hz rated (380V on Nameplate - 400/415 Available - Same horsepower at 50 Hz with a 1.0 service factor)
- Class F insulation (Impregnation Resin and magnet Wire are class H)
- Stainless Steel Nameplate - Laser etched with high contrast background
- Regreasable ball bearings (Frame 254Y and up)

Features that make a difference:

- 1.25 service factor
- Detached terminal box and extended leads
- Two stainless steel plates provided

Inverter Rated:
1000 : 1 for variable torque

ADDITIONAL TECHNICAL DATA

ELECTRICAL DATA: Contact WEG
MECHANICAL DATA: Contact WEG



PAD MOUNT MOTORS – Three-Phase

TEAO – NEMA Premium

HP	kW	RPM	NEMA Frame	Catalog Number	List Price	Mult. Symbol	Approx. Shipping Weight (lbs)	Service Factor	FL Amps @ High	FL. Eff (%)	"C" Dimension (in)	Voltage (V)	Notes
1	0.75	3600	143Y	00136ET3EPM143/5Y	565	Y1	41	1.25	1.41	81.5	12.250	208-230/460	
		1800	143Y	00118ET3EPM143/5Y	594	Y1	47	1.25	1.43	85.5	12.250	208-230/460	
1.5	1.1	3600	143Y	00156ET3EPM143/5Y	613	Y1	47	1.25	1.98	84.0	12.250	208-230/460	
		1800	145Y	00158ET3EPM143/5Y	617	Y1	52	1.25	2.00	86.5	13.234	208-230/460	
2	1.5	3600	145Y	00236ET3EPM143/5Y	661	Y1	52	1.25	2.65	85.5	13.234	208-230/460	
		1800	145Y	00218ET3EPM143/5Y	685	Y1	52	1.25	2.63	86.5	13.234	208-230/460	
3	2.2	3600	182Y	00336ET3EPM182/4Y	847	Y1	106	1.25	3.68	87.5	14.860	208-230/460	
		1800	182Y	00318ET3EPM182/4Y	735	Y1	102	1.25	3.90	89.5	14.860	208-230/460	
5	3.7	3600	184Y	00536ET3EPM182/4Y	985	Y1	113	1.25	5.96	89.5	15.860	208-230/460	
		1800	184Y	00518ET3EPM182/4Y	855	Y1	110	1.25	6.40	89.5	15.860	208-230/460	
7.5	5.5	3600	213Y	00736ET3EPM213/5Y	1,248	Y1	162	1.25	8.63	91.0	18.021	208-230/460	
		1800	213Y	00718ET3EPM213/5Y	1,240	Y1	170	1.25	9.29	91.7	18.021	208-230/460	
10	7.5	3600	215Y	01036ET3EPM213/5Y	1,477	Y1	185	1.25	11.5	91.7	19.517	208-230/460	
		1800	215Y	01018ET3EPM213/5Y	1,450	Y1	181	1.25	12.6	91.7	19.517	208-230/460	
		1200	256Y	01012ET3EPM254/6Y	2,611	Y1	320	1.25	13.3	91.0	24.945	208-230/460	
15	11	3600	254Y	01536ET3EPM254/6Y	2,005	Y1	270	1.25	16.9	91.7	23.213	208-230/460	11
		1800	254Y	01518ET3EPM254/6Y	2,050	Y1	297	1.25	18.0	92.4	23.213	208-230/460	
		1200	284Y	01512ET3EPM284/6Y	3,652	Y1	400	1.25	17.3	91.7	26.433	208-230/460	11
20	15	1800	256Y	02018ET3EPM254/6Y	2,441	Y1	326	1.25	24.4	93.0	24.945	208-230/460	
		1200	286Y	02012ET3EPM284/6Y	4,437	Y1	450	1.25	24.1	91.7	27.929	208-230/460	
25	18.5	1800	284Y	02518ET3EPM284/6Y	3,071	Y1	436	1.25	29.5	93.6	26.433	208-230/460	
		1200	324Y	02512ET3EPM324/6Y	5,353	Y1	591	1.25	30.5	93.0	29.620	208-230/460	
30	22	1800	286Y	03018ET3EPM284/6Y	3,610	Y1	466	1.25	35.1	93.6	27.929	208-230/460	
		1200	326Y	03012ET3EPM324/6Y	5,906	Y1	651	1.25	35.8	93.0	31.116	208-230/460	
40	30	1800	324Y	04018ET3EPM324/6Y	4,638	Y1	621	1.25	48.3	94.1	29.620	208-230/460	
		1200	364Y	04012ET3EPM364/5Y	8,084	Y1	1062	1.25	47.1	94.1	33.709	208-230/460	
50	37	1800	326Y	05018ET3EPM324/6Y	5,661	Y1	619	1.25	60.6	94.5	31.116	208-230/460	

Refer to electrical and mechanical data sections for additional technical information. Please refer to back cover for description of “NOTES”

For detailed specifications, data sheets, drawings and performance curves visit http://catalog.wegelectric.com

Data subject to change without notice.

PAD MOUNT MOTORS – Three-Phase



TEAO – High Efficiency

HP	kW	RPM	NEMA Frame	Catalog Number	List Price	Mult. Symbol	Approx. Shipping Weight (lbs)	Service Factor	FL Amps @ High	FL. Eff (%)	"C" Dimension (in)	Voltage (V)	Notes
1	0.75	3600	143Y	00136EP3EPM143/5Y	448	Y1	40	1.25	1.48	78.5	12.250	208-230/460	30
		1800	143Y	00118EP3EPM143/5Y	465	Y1	43	1.25	1.48	82.5	12.250	208-230/460	30
		900	182Y	00109EP3EPM182/4Y	930	Y1	91	1.25	2.31	74.0	14.860	208-230/460	30
1.5	1.1	3600	143Y	00156EP3EPM143/5Y	486	Y1	43	1.25	2.07	82.5	12.250	208-230/460	30
		1800	145Y	00158EP3EPM143/5Y	466	Y1	45	1.25	2.05	84.0	13.234	208-230/460	30
2	1.5	3600	145Y	00236EP3EPM143/5Y	549	Y1	47	1.25	2.60	84.0	13.234	208-230/460	30
3	2.2	3600	182Y	00336EP3EPM182/4Y	653	Y1	97	1.25	3.67	85.5	14.860	208-230/460	30
		1800	182Y	00318EP3EPM182/4Y	585	Y1	92	1.15	4.15	87.5	14.860	208-230/460	30
5	3.7	3600	184Y	00536EP3EPM182/4Y	813	Y1	106	1.25	6.10	87.5	15.860	208-230/460	30
		1800	184Y	00518EP3EPM182/4Y	692	Y1	85	1.15	6.80	87.5	15.860	208-230/460	30
7.5	5.5	3600	213Y	00736EP3EPM213/5Y	1,090	Y1	149	1.25	8.67	88.5	18.021	208-230/460	30
		1800	213Y	00718EP3EPM213/5Y	940	Y1	147	1.25	9.52	89.5	18.021	208-230/460	30
		1200	254Y	00712EP3EPM254/6Y	1,861	Y1	247	1.25	9.52	89.5	23.213	208-230/460	30
10	7.5	3600	215Y	01036EP3EPM213/5Y	1,268	Y1	149	1.25	11.7	89.5	19.517	208-230/460	30
		1800	215Y	01018EP3EPM213/5Y	1,119	Y1	155	1.25	12.8	89.5	19.517	208-230/460	30
15	11	3600	254Y	01536EP3EPM254/6Y	1,801	Y1	264	1.25	17.0	90.2	23.213	208-230/460	30
		1800	254Y	01518EP3EPM254/6Y	1,658	Y1	279	1.25	18.1	91.0	23.213	208-230/460	30
20	15	1800	256Y	02018EP3EPM254/6Y	2,035	Y1	299	1.25	24.6	91.0	24.945	208-230/460	30
25	18.5	1800	284Y	02518EP3EPM284/6Y	2,458	Y1	405	1.25	29.6	92.4	26.433	208-230/460	30
30	22	1800	286Y	03018EP3EPM284/6Y	3,008	Y1	425	1.25	34.7	92.4	27.929	208-230/460	30
40	30	1800	324Y	04018EP3EPM324/6Y	4,069	Y1	547	1.25	47.6	93.0	29.620	208-230/460	30
		1200	364Y	04012EP3EPM364/5Y	6,587	Y1	871	1.25	47.6	93.0	33.709	208-230/460	30
50	37	1800	326Y	05018EP3EPM324/6Y	4,536	Y1	621	1.25	58.7	93.0	31.116	208-230/460	30
60	45	1200	404Y	06012EP3EPM404/5Y	10,017	Y1	1104	1.25	70.2	93.6	38.077	208-230/460	30

Refer to electrical and mechanical data sections for additional technical information. Please refer to back cover for description of "NOTES"

For detailed specifications, data sheets, drawings and performance curves visit http://catalog.wegelectric.com

Data subject to change without notice.

Pump Genius Enabled CFW11

Pump Genius process control software is designed to reduce system operation and maintenance costs while increasing process accuracy and protection. The software provides multiple pump control and protection, as well as system monitoring and protection. Pump Genius can be applied to any system that requires constant flow or pressure.

Benefits

- Reduced System Component Cost
- Improved System Reliability
- Reduce Maintenance Costs
- Eliminate Costly Control Panels
- Reduce System Energy Requirements
- Reduce Overall Installation Costs

System Operation

- Pump Genius software monitors system pressure or flow and references low / high set point and run time requirements.
- The lead and lag pumps are cycled on and off based on motor run times.
  - Starting motors are selected based on run time - motor with least amount of run time
  - Stopping motors are selected based on run time - motor with highest amount of run time
  - All pumps are dynamically alternated based on run times and system set point requirements
- System faults are monitored and alarmed
- Motor faults are monitored and alarmed
- Drive faults are monitored and alarmed
- Up to 6 pumps dynamically alternated and controlled



Pump Genius Enabled CFW1
Variable Frequency Drive

Description:

Pump Genius software works with the CFW11 drive to control system processes.

The software monitors system pressure or flow and manages pumping requirements.

Please contact your authorized WEG distributor or go to **weg.net/us** for further information or additional specifications. **1-800-ASK-4WEG**

www.weg.net/us

Pump Motors

JET PUMP (56C/56J FRAMES)

These versatile motors have the torque and durability for the toughest commercial applications, yet are also economical choices for residential applications. Available with or without base and in “J” and “C” configurations



ODP Single Phase



ODP Three Phase



TEFC Single Phase



TEFC Three Phase

ODP & TEFC - Single Phase

- Insulation class B
- Sealed ball bearings (Drive end)
- NEMA Service factor

ODP & TEFC - Three Phase

- Insulation class B (ODP)
- Insulation class F (TEFC)
- NEMA Service factor

Features that make a difference:

ODP & TEFC - Single Phase

- Automatic Reset Thermal Overload Protector
- Stainless steel shaft end

ODP & TEFC - Three Phase

- Stainless steel shaft end

ADDITIONAL TECHNICAL DATA

ELECTRICAL DATA: B-66 to B-69
MECHANICAL DATA: C-39 to C-42



JET PUMP SINGLE-PHASE (56C/56J FRAMES)

TEFC – Foot Mount

HP	kW	RPM	NEMA Frame	Catalog Number	List Price	Mult. Symbol	Approx. Shipping Weight (lbs)	Service Factor	FL Amps @ High	FL. Eff (%)	"C" Dimension (in)	Voltage (V)	Notes
0.33	0.25	3600	B56C	.3336ES1BJP56C	263	P1A	36	1.15	2.85	53.0	11.496	115/208-230	3;9
		3600	B56J	.3336ES1BJP56J	282	P1B	36	1.15	2.85	53.0	11.996	115/208-230	3;9
0.5	0.37	3600	B56C	.5036ES1BJP56C	284	P1A	40	1.15	3.80	58.0	11.496	115/208-230	3;9
		3600	B56J	.5036ES1BJP56J	300	P1B	40	1.15	3.80	58.0	11.996	115/208-230	3;9
0.75	0.55	3600	B56C	.7536ES1BJP56C	320	P1A	41	1.15	5.20	64.0	11.496	115/208-230	3;9
		3600	B56J	.7536ES1BJP56J	330	P1B	41	1.15	5.20	64.0	11.996	115/208-230	3;9
1	0.75	3600	D56C	00136ES1BJP56C	344	P1A	46	1.15	6.40	67.0	12.677	115/208-230	3;9
		3600	D56J	00136ES1BJP56J	374	P1B	46	1.15	6.40	67.0	13.150	115/208-230	3;9
1.5	1.1	3600	D56C	00156ES1BJP56C	412	P1A	56	1.15	8.55	70.0	12.677	115/208-230	3;9
		3600	D56J	00156ES1BJP56J	425	P1B	56	1.15	8.55	70.0	13.150	115/208-230	3;9
2	1.5	3600	F56HC	00236ES1BJP56C	487	P1A	65	1.15	10.0	74.0	13.858	115/208-230	3;9
		3600	F56HJ	00236ES1BJP56J	486	P1B	65	1.15	10.0	74.0	14.330	115/208-230	3;9
3	2.2	3600	G56HC	00336ES1DJP56C	548	P1A	78	1.15	13.0	80.0	14.252	230	3;9;19
		3600	G56HJ	00336ES1DJP56J	557	P1B	78	1.15	13.0	80.0	14.724	230	9;19

TEFC – Footless

HP	kW	RPM	NEMA Frame	Catalog Number	List Price	Mult. Symbol	Approx. Shipping Weight (lbs)	Service Factor	FL Amps @ High	FL. Eff (%)	"C" Dimension (in)	Voltage (V)	Notes
0.33	0.25	3600	B56C	.3336ES1BJPR56C	282	P1A	36	1.15	2.85	53.0	11.496	115/208-230	3;9;20
		3600	B56J	.3336ES1BJPR56J	296	P1B	36	1.15	2.85	53.0	11.996	115/208-230	9;20
0.5	0.37	3600	B56C	.5036ES1BJPR56C	299	P1A	40	1.15	3.80	58.0	11.496	115/208-230	3;9;20
		3600	B56J	.5036ES1BJPR56J	305	P1B	40	1.15	3.80	58.0	11.996	115/208-230	9;20
0.75	0.55	3600	B56C	.7536ES1BJPR56C	341	P1A	41	1.15	5.20	64.0	11.496	115/208-230	3;9;20
		3600	B56J	.7536ES1BJPR56J	336	P1B	41	1.15	5.20	64.0	11.996	115/208-230	9;20
1	0.75	3600	D56C	00136ES1BJPR56C	357	P1A	46	1.15	6.40	67.0	12.677	115/208-230	3;9;20
		3600	D56J	00136ES1BJPR56J	386	P1B	46	1.15	6.40	67.0	13.150	115/208-230	9;20
1.5	1.1	3600	D56C	00156ES1BJPR56C	432	P1A	56	1.15	8.55	70.0	12.677	115/208-230	3;9;20
		3600	D56J	00156ES1BJPR56J	438	P1B	56	1.15	8.55	70.0	13.150	115/208-230	9;20
2	1.5	3600	F56C	00236ES1BJPR56C	494	P1A	65	1.15	10.0	74.0	13.858	115/208-230	3;9;20
		3600	F56J	00236ES1BJPR56J	498	P1B	65	1.15	10.0	74.0	14.330	115/208-230	9;20
3	2.2	3600	G56C	00336ES1DJPR56C	555	P1A	78	1.15	13.0	80.0	14.252	230	3;9;19;20
		3600	G56J	00336ES1DJPR56J	573	P1B	78	1.15	13.0	80.0	14.724	230	9;19;20

Refer to electrical and mechanical data sections for additional technical information. Please refer to back cover for description of “NOTES”

For detailed specifications, data sheets, drawings and performance curves visit http://catalog.wegelectric.com



JET PUMP SINGLE-PHASE (56C/56J FRAMES)

ODP – Foot Mount

HP	kW	RPM	NEMA Frame	Catalog Number	List Price	Mult. Symbol	Approx. Shipping Weight (lbs)	Service Factor	FL Amps @ High	FL. Eff (%)	"C" Dimension (in)	Voltage (V)	Notes
0.33	0.25	3600	W56J	.33360S1BJP56J	254	P1B	21	1.75	2.90	58.0	10.732	115/208-230	3;9
0.5	0.37	3600	W56J	.50360S1BJP56J	258	P1B	24	1.60	3.60	64.4	11.126	115/208-230	3;9
0.75	0.55	3600	W56J	.75360S1BJP56J	296	P1B	32	1.50	4.25	68.3	11.913	115/208-230	3;9
1	0.75	3600	E56J	001360S1BJP56J	334	P1B	36	1.40	6.80	66.3	12.031	115/208-230	3;9
1.5	1.1	3600	E56J	001560S1BJP56J	382	P1B	40	1.30	8.20	73.2	13.212	115/208-230	3;9
2	1.5	3600	E56J	002360S1BJP56J	438	P1B	48	1.20	10.4	77.3	14.000	115/208-230	3;9
3	2.2	3600	E56J	003360S1DJP56J	499	P1B	53	1.15	15.0	77.1	14.787	230	3;9

Refer to electrical and mechanical data sections for additional technical information. Please refer to back cover for description of "NOTES"

For detailed specifications, data sheets, drawings and performance curves visit http://catalog.wegelectric.com

Data subject to change without notice.



JET PUMP SINGLE-PHASE (56C/56J FRAMES)

ODP – Footless

HP	kW	RPM	NEMA Frame	Catalog Number	List Price	Mult. Symbol	Approx. Shipping Weight (lbs)	Service Factor	FL Amps @ High	FL. Eff (%)	"C" Dimension (in)	Voltage (V)	Notes
0.33	0.25	3600	W56C	.33360S1BJPR56C	237	P1A	21	1.75	2.90	58.0	10.232	115/208-230	3;9;20
		3600	W56J	.33360S1BJPR56J	255	P1B	21	1.75	2.90	58.0	10.732	115/208-230	3;9;20
0.5	0.37	3600	W56C	.50360S1BJPR56C	255	P1A	24	1.60	3.60	64.4	10.826	115/208-230	3;9;20
		3600	W56J	.50360S1BJPR56J	258	P1B	24	1.60	3.60	64.4	11.126	115/208-230	3;9;20
0.75	0.55	3600	W56C	.75360S1BJPR56C	297	P1A	32	1.50	4.25	68.3	11.413	115/208-230	3;9;20
		3600	W56J	.75360S1BJPR56J	296	P1B	32	1.50	4.25	68.3	11.913	115/208-230	3;9;20
1	0.75	3600	E56C	00136OS1BJPR56C	317	P1A	36	1.40	6.80	66.3	11.531	115/208-230	3;9;20
		3600	E56J	00136OS1BJPR56J	334	P1B	36	1.40	6.80	66.3	12.031	115/208-230	3;9;20
1.5	1.1	3600	E56C	00156OS1BJPR56C	338	P1A	40	1.30	8.20	73.2	12.712	115/208-230	3;9;20
		3600	E56J	00156OS1BJPR56J	382	P1B	40	1.30	8.20	73.2	13.212	115/208-230	3;9;20
2	1.5	3600	E56C	00236OS1BJPR56C	424	P1A	58	1.20	10.4	77.3	13.500	115/208-230	3;9;20
		3600	E56J	00236OS1BJPR56J	438	P1B	48	1.20	10.4	77.3	14.000	115/208-230	3;9;20
3	2.2	3600	E56C	00336OS1DJPR56C	482	P1A	53	1.15	15.0	77.1	14.287	230	3;9;20
		3600	E56J	00336OS1DJPR56J	499	P1B	53	1.15	15.0	77.1	14.787	230	3;9;20

Refer to electrical and mechanical data sections for additional technical information. Please refer to back cover for description of “NOTES”

For detailed specifications, data sheets, drawings and performance curves visit http://catalog.wegelectric.com

JET PUMP THREE-PHASE (56C/56J FRAMES)



TEFC – Foot Mount

HP	kW	RPM	NEMA Frame	Catalog Number	List Price	Mult. Symbol	Approx. Shipping Weight (lbs)	Service Factor	FL Amps @ High	FL. Eff (%)	"C" Dimension (in)	Voltage (V)	Notes
0.3	0.25	3600	B56J	.3336ES3EJP56J	259	P1B	33	1.15	0.60	66.0	11.996	208-230/460	9
		3600	56J	.3336ES3EJP56J-S	259	P1B	22	1.15	0.60	62.0	11.654	208-230/460	9
0.5	0.37	3600	B56J	.5036ES3EJP56J	267	P1B	36	1.15	0.83	72.0	11.996	208-230/460	9
		3600	56J	.5036ES3EJP56J-S	267	P1B	24	1.15	0.84	68.0	12.047	208-230/460	9
0.75	0.55	3600	B56J	.7536ES3EJP56J	301	P1B	41	1.15	1.10	77.0	11.996	208-230/460	9
		3600	56J	.7536ES3EJP56J-S	301	P1B	25	1.15	1.13	72.0	12.047	208-230/460	9
1	0.75	3600	B56J	00136ES3EJP56J	344	P1B	44	1.15	1.40	80.0	11.996	208-230/460	9
		3600	56J	00136ES3EJP56J-S	344	P1B	28	1.15	1.51	74.0	12.441	208-230/460	9
1.5	1.1	3600	B56J	00156ES3EJP56J	374	P1B	48	1.15	1.96	82.5	11.996	208-230/460	9
		3600	56J	00156ES3EJP56J-S	374	P1B	31	1.15	1.99	77.0	12.835	208-230/460	9
2	1.5	3600	D56J	00236ES3EJP56J	421	P1B	58	1.15	2.58	82.5	13.150	208-230/460	9
		3600	56HJ	00236ES3EJP56J-S	421	P1B	36	1.15	2.57	81.5	13.622	208-230/460	9
3	2.2	3600	F56HJ	00336ES3EJP56J	489	P1B	67	1.15	3.80	84.0	14.330	208-230/460	9
		3600	56HJ	00336ES3EJP56J-S	489	P1B	43	1.15	3.76	81.5	14.409	208-230/460	9

Refer to electrical and mechanical data sections for additional technical information. Please refer to back cover for description of “NOTES”

For detailed specifications, data sheets, drawings and performance curves visit http://catalog.wegelectric.com

Data subject to change without notice.



JET PUMP THREE-PHASE (56C/56J FRAMES)

TEFC – Footless

HP	kW	RPM	NEMA Frame	Catalog Number	List Price	Mult. Symbol	Approx. Shipping Weight (lbs)	Service Factor	FL Amps @ High	FL. Eff (%)	"C" Dimension (in)	Voltage (V)	Notes
0.33	0.25	3600	B56C	.3336ES3EJPR56C	257	P1A	33	1.15	0.60	66.0	11.496	208-230/460	9;20
		3600	56C	.3336ES3EJPR56C-S	257	P1A	22	1.15	0.60	62	11.142	208-230/460	9;20
		3600	B56J	.3336ES3EJPR56J	268	P1B	33	1.15	0.60	66.0	11.996	208-230/460	9;20
		3600	56J	.3336ES3EJPR56J-S	268	P1B	22	1.15	0.60	62	11.654	208-230/460	9;20
0.5	0.37	3600	B56C	.5036ES3EJPR56C	270	P1A	36	1.15	0.83	72.0	11.496	208-230/460	9;20
		3600	56C	.5036ES3EJPR56C-S	270	P1A	24	1.15	0.84	68	11.539	208-230/460	9;20
		3600	B56J	.5036ES3EJPR56J	282	P1B	36	1.15	0.83	72.0	11.996	208-230/460	9;20
		3600	56J	.5036ES3EJPR56J-S	282	P1B	24	1.15	0.84	68	12.047	208-230/460	9;20
0.75	0.55	3600	B56C	.7536ES3EJPR56C	293	P1A	41	1.15	1.10	77.0	11.496	208-230/460	9;20
		3600	56C	.7536ES3EJPR56C-S	293	P1A	25	1.15	1.13	72	11.535	208-230/460	9;20
		3600	B56J	.7536ES3EJPR56J	319	P1B	41	1.15	1.10	77.0	11.996	208-230/460	9;20
		3600	56J	.7536ES3EJPR56J-S	319	P1B	25	1.15	1.13	72	12.047	208-230/460	9;20
1	0.75	3600	B56C	00136ES3EJPR56C	346	P1A	44	1.15	1.40	80.0	11.496	208-230/460	9;20
		3600	56C	00136ES3EJPR56C-S	346	P1A	28	1.15	1.51	74	11.933	208-230/460	9;20
		3600	B56J	00136ES3EJPR56J	346	P1B	44	1.15	1.40	80.0	11.996	208-230/460	9;20
		3600	56J	00136ES3EJPR56J-S	346	P1B	28	1.15	1.51	74	12.441	208-230/460	9;20
1.5	1.1	3600	B56C	00156ES3EJPR56C	371	P1A	48	1.15	1.96	82.5	11.496	208-230/460	9;20
		3600	56C	00156ES3EJPR56C-S	371	P1A	31	1.15	1.99	77	12.323	208-230/460	9;20
		3600	B56J	00156ES3EJPR56J	378	P1B	48	1.15	1.96	82.5	11.996	208-230/460	9;20
		3600	56J	00156ES3EJPR56J-S	378	P1B	31	1.15	1.99	77	12.835	208-230/460	9;20
2	1.5	3600	D56C	00236ES3EJPR56C	401	P1A	58	1.15	2.58	82.5	12.677	208-230/460	9;20
		3600	56HC	00236ES3EJPR56C-S	401	P1A	36	1.15	2.57	81.5	13.114	208-230/460	9;20
		3600	D56J	00236ES3EJPR56J	430	P1B	58	1.15	2.58	82.5	13.150	208-230/460	9;20
		3600	56HJ	00236ES3EJPR56J-S	430	P1B	36	1.15	2.57	81.5	13.622	208-230/460	9;20
3	2.2	3600	F56C	00336ES3EJPR56C	480	P1A	67	1.15	3.80	84.0	13.858	208-230/460	9;19;20
		3600	56HC	00336ES3EJPR56C-S	480	P1A	43	1.15	3.76	81.5	13.898	208-230/460	9;19;20
		3600	F56J	00336ES3EJPR56J	503	P1B	67	1.15	3.80	84.0	14.330	208-230/460	9;20
		3600	56HJ	00336ES3EJPR56J-S	503	P1B	43	1.15	3.76	81.5	14.409	208-230/460	9;20

Refer to electrical and mechanical data sections for additional technical information. Please refer to back cover for description of “NOTES”

For detailed specifications, data sheets, drawings and performance curves visit http://catalog.wegelectric.com

Pump Motors

JET PUMP THREE-PHASE (56C/56J FRAMES)



ODP – Foot Mount

HP	kW	RPM	NEMA Frame	Catalog Number	List Price	Mult. Symbol	Approx. Shipping Weight (lbs)	Service Factor	FL Amps @ High	FL. Eff (%)	"C" Dimension (in)	Voltage (V)	Notes
0.33	0.25	3600	A56C	.33360S3EJP56J	224	P1B	23	1.75	0.70	63.0	10.315	208-230/460	9
		3600	56C	.33360S3EJP56J-S	224	P1B	21	1.35	0.66	66	10.315	208-230/460	9
0.5	0.37	3600	A56J	.50360S3EJP56J	236	P1B	24	1.60	0.96	66.0	10.985	208-230/460	9
		3600	56J	.50360S3EJP56J-S	236	P1B	21	1.25	0.95	68	10.827	208-230/460	9
		3600	A56J	.50360S3HJP56J	236	P1B	24	1.60	0.77	66.0	10.985	575	9
		3600	56J	.50360S3HJP56J-S	236	P1B	21	1.25	0.76	68	10.827	575	9
0.75	0.55	3600	B56J	.75360S3EJP56J	271	P1B	26	1.50	1.20	72.0	11.733	208-230/460	9
		3600	56J	.75360S3EJP56J-S	271	P1B	23	1.25	1.26	72	11.220	208-230/460	9
		3600	B56J	.75360S3HJP56J	271	P1B	26	1.50	0.96	72.0	11.733	575	9
		3600	56J	.75360S3HJP56J-S	271	P1B	23	1.25	1.01	72	11.220	575	9
1	0.75	3600	B56J	001360S3EJP56J	286	P1B	29	1.40	1.55	74.0	11.733	208-230/460	9
		3600	56J	001360S3EJP56J-S	286	P1B	25	1.25	1.61	74	11.220	208-230/460	9
		3600	B56J	001360S3HJP56J	286	P1B	29	1.40	1.24	74.0	11.733	575	9
		3600	56J	001360S3HJP56J-S	286	P1B	25	1.25	1.29	74	11.220	575	9
1.5	1.1	3600	D56J	001560S3EJP56J	296	P1B	34	1.30	2.13	76.0	12.993	208-230/460	9
		3600	56J	001560S3EJP56J-S	296	P1B	28	1.15	2.16	77	11.614	208-230/460	9
		3600	D56J	001560S3HJP56J	296	P1B	34	1.30	1.70	76.0	12.993	575	9
		3600	56J	001560S3HJP56J-S	296	P1B	28	1.15	1.73	77	11.614	575	9
2	1.5	3600	D56J	002360S3EJP56J	316	P1B	39	1.20	2.68	81.0	12.993	208-230/460	9
		3600	56HJ	002360S3EJP56J-S	316	P1B	31	1.15	2.82	78.5	12.008	208-230/460	9
		3600	D56J	002360S3HJP56J	316	P1B	39	1.20	2.14	81.0	12.993	575	9
		3600	56HJ	002360S3HJP56J-S	316	P1B	31	1.15	2.26	78.5	12.008	575	9
3	2.2	3600	F56HJ	003360S3EJP56J	339	P1B	45	1.15	3.87	82.0	14.174	208-230/460	9
		3600	56HJ	003360S3EJP56J-S	339	P1B	35	1.15	3.89	81.5	12.795	208-230/460	9
		3600	F56HJ	003360S3HJP56J	339	P1B	45	1.15	3.10	82.0	14.174	575	9
		3600	56HJ	003360S3HJP56J-S	339	P1B	35	1.15	3.11	81.5	12.795	575	9

Refer to electrical and mechanical data sections for additional technical information. Please refer to back cover for description of "NOTES"

For detailed specifications, data sheets, drawings and performance curves visit http://catalog.wegelectric.com

Data subject to change without notice.

JET PUMP THREE-PHASE (56C/56J FRAMES)

ODP – Footless

HP	kW	RPM	NEMA Frame	Catalog Number	List Price	Mult. Symbol	Approx. Shipping Weight (lbs)	Service Factor	FL Amps @ High	FL. Eff (%)	"C" Dimension (in)	Voltage (V)	Notes
0.33	0.25	3600	A56C	.33360S3EJPR56C	220	P1A	23	1.75	0.70	63.0	10.315	208-230/460	9;20
		3600	56C	.33360S3EJPR56C-S	220	P1A	21	1.35	0.66	66	10.315	208-230/460	9;20
		3600	A56J	.33360S3EJPR56J	229	P1B	23	1.75	0.70	63.0	10.985	208-230/460	9;20
		3600	56J	.33360S3EJPR56J-S	229	P1B	21	1.35	0.66	66	10.815	208-230/460	9;20
0.5	0.37	3600	A56C	.50360S3EJPR56C	224	P1A	24	1.60	0.96	66.0	10.315	208-230/460	9;20
		3600	56C	.50360S3EJPR56C-S	224	P1A	21	1.25	0.95	68	10.315	208-230/460	9;20
		3600	A56J	.50360S3EJPR56J	241	P1B	24	1.60	0.96	66.0	10.985	208-230/460	9;20
		3600	56J	.50360S3EJPR56J-S	241	P1B	21	1.25	0.95	68	10.827	208-230/460	9;20
0.75	0.55	3600	B56C	.75360S3EJPR56C	257	P1A	26	1.50	1.20	72.0	11.103	208-230/460	9;20
		3600	56C	.75360S3EJPR56C-S	257	P1A	23	1.25	1.26	72	10.709	208-230/460	9;20
		3600	B56J	.75360S3EJPR56J	278	P1B	26	1.50	1.20	72.0	11.733	208-230/460	9;20
		3600	56J	.75360S3EJPR56J-S	278	P1B	23	1.25	1.26	72	11.220	208-230/460	9;20
		3600	B56C	.75360S3HJPR56C	257	P1A	26	1.50	0.96	72.0	11.103	575	9;20
		3600	56C	.75360S3HJPR56C-S	257	P1A	23	1.25	1.01	72	10.709	575	9;20
1	0.75	3600	B56C	001360S3EJPR56C	274	P1A	29	1.40	1.55	74.0	11.103	208-230/460	9;20
		3600	56C	001360S3EJPR56C-S	274	P1A	24	1.25	1.61	74	10.709	208-230/460	9;20
		3600	B56J	001360S3EJPR56J	287	P1B	29	1.40	1.55	74.0	11.733	208-230/460	9;20
		3600	56J	001360S3EJPR56J-S	287	P1B	25	1.25	1.61	74	11.220	208-230/460	9;20
1.5	1.1	3600	D56C	001560S3EJPR56C	290	P1A	34	1.30	2.13	76.0	12.284	208-230/460	9;20
		3600	56C	001560S3EJPR56C-S	290	P1A	27	1.15	2.16	77	11.102	208-230/460	9;20
		3600	D56J	001560S3EJPR56J	305	P1B	34	1.30	2.13	76.0	12.993	208-230/460	9;20
		3600	56J	001560S3EJPR56J-S	305	P1B	28	1.15	2.16	77	11.614	208-230/460	9;20
		3600	D56C	001560S3HJPR56C	290	P1A	34	1.30	1.70	76.0	12.284	575	9;20
		3600	56C	001560S3HJPR56C-S	290	P1A	27	1.15	1.73	77	11.102	575	9;20
2	1.5	3600	D56C	002360S3EJPR56C	311	P1A	58	1.20	2.68	81.0	12.284	208-230/460	9;20
		3600	56HC	002360S3EJPR56C-S	311	P1A	32	1.15	2.82	78.5	11.890	208-230/460	9;20
		3600	D56J	002360S3EJPR56J	321	P1B	39	1.20	2.68	81.0	12.993	208-230/460	9;20
		3600	56HJ	002360S3EJPR56J-S	321	P1B	31	1.15	2.82	78.5	12.008	208-230/460	9;20
		3600	D56C	002360S3HJPR56C	311	P1A	58	1.20	2.14	81.0	12.284	575	9;20
		3600	56HC	002360S3HJPR56C-S	311	P1A	32	1.15	2.26	78.5	11.890	575	9;20
3	2.2	3600	F56HC	003360S3EJPR56C	332	P1A	67	1.15	3.87	82.0	13.645	208-230/460	9;20
		3600	56HC	003360S3EJPR56C-S	332	P1A	35	1.15	3.89	81.5	12.283	208-230/460	9;20
		3600	F56J	003360S3EJPR56J	350	P1B	45	1.15	3.87	82.0	14.174	208-230/460	9;20
		3600	56HJ	003360S3EJPR56J-S	350	P1B	35	1.15	3.89	81.5	12.795	208-230/460	9;20

Refer to electrical and mechanical data sections for additional technical information. Please refer to back cover for description of “NOTES”

For detailed specifications, data sheets, drawings and performance curves visit http://catalog.wegelectric.com

Pump Motors

POOL & SPA MOTORS

ODP

These motors are specially designed for pool duty. Available in high and low service factor.



C-Face

Standard Features:

- C-Face is cast iron; square flange is aluminum
- Class B insulation

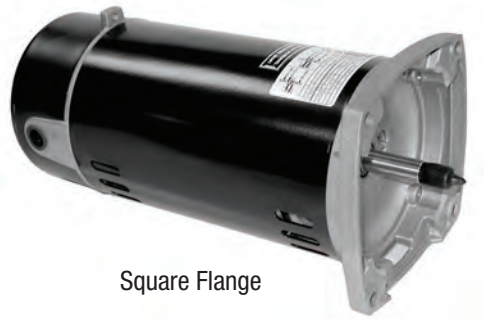

Square Flange

Features that make a difference:

- Dual compartment for easy maintenance
- Rated for 50 degrees Celsius ambient temperature
- Stainless steel shaft (AISI 316)
- Automatic Reset thermal overload protection
- Threaded shaft
- Internal and external grounding
- Terminal box threaded NPT 1/2”
- Sealed bearings
- Drive endshield sealing (V’ring for C-face, Lip Seal for Square flange)
- Epoxy coating

ADDITIONAL TECHNICAL DATA

ELECTRICAL DATA: B-70
MECHANICAL DATA: C-59



ODP – C-Face – Start Capacitor – High Service Factor

HP	kW	RPM	NEMA Frame	Catalog Number	List Price	Mult. Symbol	Approx. Shipping Weight (lbs)	Service Factor	FL Amps @ High	FL. Eff (%)	"C" Dimension (in)	Voltage (V)	Notes
0.5	0.37	3600	K56J	PCJ105H	236	P1D	20	1.60	4.55	60.4	13.898	115/230	3;9;20
0.75	0.55	3600	K56J	PCJ107H	263	P1D	24	1.50	5.60	65.8	13.898	115/230	3;9;20
1	0.75	3600	L56J	PCJ110H	300	P1D	27	1.40	7.05	69.7	14.488	115/230	3;9;20
1.5	1.1	3600	M56J	PCJ115H	400	P1D	30	1.30	7.50	76.3	15.079	230	3;9;20
2	1.5	3600	M56J	PCJ120H	486	P1D	32	1.20	9.20	78.3	15.079	230	3;9;20



ODP – Square Flange – Start Capacitor – High Service Factor

HP	kW	RPM	NEMA Frame	Catalog Number	List Price	Mult. Symbol	Approx. Shipping Weight (lbs)	Service Factor	FL Amps @ High	FL. Eff (%)	"C" Dimension (in)	Voltage (V)	Notes
0.33	0.25	3600	K48Y	PCQ103H	231	P1D	18	1.95	3.45	55.0	12.913	115/230	3;9;20
0.5	0.37	3600	K48Y	PCQ105H	241	P1D	20	1.90	4.55	60.4	12.913	115/230	3;9;20
0.75	0.55	3600	K48Y	PCQ107H	275	P1D	24	1.65	5.60	65.8	12.913	115/230	3;9;20
1	0.75	3600	L48Y	PCQ110H	320	P1D	27	1.65	7.05	69.7	13.504	115/230	3;9;20
1.5	1.1	3600	M48Y	PCQ115H	411	P1D	30	1.50	7.50	76.3	14.094	230	3;9;20
2	1.5	3600	M48Y	PCQ120H	500	P1D	32	1.30	9.20	78.3	14.094	230	3;9;20

Refer to electrical and mechanical data sections for additional technical information. Please refer to back cover for description of “NOTES”

For detailed specifications, data sheets, drawings and performance curves visit http://catalog.wegelectric.com

POOL & SPA SINGLE-PHASE MOTORS



ODP – C-Face – Start Capacitor – Low Service Factor

HP	kW	RPM	NEMA Frame	Catalog Number	List Price	Mult. Symbol	Approx. Shipping Weight (lbs)	Service Factor	FL Amps @ High	FL. Eff (%)	"C" Dimension (in)	Voltage (V)	Notes
0.75	0.55	3600	K56J	PCJ107	236	P1D	20	1.30	5.10	66.2	13.898	115/230	3;9;20
1	0.75	3600	K56J	PCJ110	263	P1D	24	1.25	6.25	70.1	13.898	115/230	3;9;20
1.5	1.1	3600	L56J	PCJ115	300	P1D	27	1.10	8.85	69.6	14.488	115/230	3;9;20
2	1.5	3600	M56J	PCJ120	400	P1D	30	1.10	9.30	76.6	15.079	230	3;9;20
2.5	1.9	3600	M56J	PCJ125	486	P1D	32	1.04	10.8	80.7	15.079	230	3;9;20



ODP – Square Flange – Start Capacitor – Low Service Factor

HP	kW	RPM	NEMA Frame	Catalog Number	List Price	Mult. Symbol	Approx. Shipping Weight (lbs)	Service Factor	FL Amps @ High	FL. Eff (%)	"C" Dimension (in)	Voltage (V)	Notes
0.5	0.37	3600	K48Y	PCQ105	231	P1D	18	1.30	3.75	61.8	12.913	115/230	3;9;20
0.75	0.55	3600	K48Y	PCQ107	241	P1D	20	1.30	5.10	66.2	12.913	115/230	3;9;20
1	0.75	3600	K48Y	PCQ110	275	P1D	24	1.25	6.25	70.1	12.913	115/230	3;9;20
1.5	1.1	3600	L48Y	PCQ115	320	P1D	27	1.10	8.85	69.6	13.504	115/230	3;9;20
2	1.5	3600	M48Y	PCQ120	411	P1D	30	1.10	9.30	76.6	14.094	230	3;9;20
2.5	1.9	3600	M48Y	PCQ125	500	P1D	32	1.04	10.8	80.7	14.094	230	3;9;20

Refer to electrical and mechanical data sections for additional technical information. Please refer to back cover for description of "NOTES"

For detailed specifications, data sheets, drawings and performance curves visit http://catalog.wegelectric.com

Data subject to change without notice.

Pump Motors

CLOSE-COUPLED PUMP MOTORS

ODP - Three Phase

WEG Open Drip Proof motors are designed to meet demanding applications in environments where dirt and humidity are minimal. These motors are specifically designed to provide maximum ventilation and heat dissipation.



Inverter Rated: 1000 : 1 for variable torque

Features that make a difference:

- 50/60 Hz rated (380V on Nameplate - 400/415 Available - Same Horse Power at 50 Hz with a 1.0 service factor)
- Class F insulation (Impregnation Resin and Magnet wire are class H)
- F1 Mounted (Cast Iron Frame motors are F2 convertible)
- Stainless Steel Nameplate - Laser etched with high contrast background (Cast Iron Frame only)
- Regreasable ball bearings (Frames 254JM/JP and up)
- Aegis Ring™ inside. See page 229

TEFC - Three Phase

High performance with maximum energy efficiency, this is the meaning of the new WEG electric motor. High efficiency and Low cost of Ownership throughout the entire motor lifetime have been the basis for the W22 development. A design created to anticipate concepts on performance and energy savings.

WEG's W22 cast iron platform has an improved cooling system and solid feet for cooler operation and reduced vibration and noise extending the life of the motor.



Inverter Rated: 1000 : 1 for variable torque

Standard Features:

- 50/60 Hz rated (380V on Nameplate - 400/415 Available - Same Horse Power at 50 Hz with a 1.0 service factor)
- Class F insulation (Impregnation Resin and Magnet wire are class H)
- F1 Mounted (Cast Iron frames are F2 convertible)
- Stainless Steel Nameplate - Laser etched with high contrast background
- Regreasable ball bearings (Frames 254JM/JP and up)
- Gasketed conduit box
- Class I, Div. 2, Groups A, B, C & D – T3, Class II, Div 2, Groups F & G – T3C

Features that make a difference:

- 1.25 service factor
- Optimized ventilation system for cooler operation and reduced noise levels
- Solid base for reduced vibration levels
- NPT Threaded terminal box
- Aegis Ring™ inside. See page 227

ADDITIONAL TECHNICAL DATA

ELECTRICAL DATA:	
– High Efficiency	B-22; B-52
– NEMA Premium	B-6; B-18
MECHANICAL DATA:	C-27 to C-35

CLOSE-COUPLED PUMP TEFC MOTORS



JM – TEFC – Single-Phase

HP	kW	RPM	NEMA Frame	Catalog Number	List Price	Mult. Symbol	Approx. Shipping Weight (lbs)	Service Factor	FL Amps @ High	FL. Eff (%)	"C" Dimension (in)	Voltage (V)	Notes
0.50	0.37	3600	143JM	.5036ES1E143JM	668	P1	26	1.15	1.90	60.0	15.866	208-230/460	
1	0.75	3600	143JM	00136ES1E143JM	682	P1	53	1.15	3.15	67.0	15.866	208-230/460	
		1800	143JM	00118ES1E143JM	687	P1	60	1.15	2.65	75.0	15.866	208-230/460	
1.5	1.1	3600	143JM	00156ES1E143JM	729	P1	57	1.15	3.90	73.0	15.866	208-230/460	
		1800	145JM	00158ES1E145JM	754	P1	67	1.15	3.60	77.0	16.458	208-230/460	
2	1.5	3600	145JM	00236ES1E145JM	770	P1	60	1.15	4.90	79.0	16.458	208-230/460	
		1800	145JM	00218ES1E145JM	814	P1	68	1.15	4.60	78.0	16.458	208-230/460	
3	2.2	3600	145JM	00336ES1C145JM	1,076	P1	65	1.15	13.5	79.0	16.458	208-230	
		3600	145JM	00336ES1E145JM	1,076	P1	65	1.15	6.75	79.0	16.458	208-230/460	
		1800	184JM	00318ES1E184JM	1,182	P1	100	1.15	6.80	77.0	17.368	208-230/460	
5	3.7	3600	184JM	00536ES1C184JM	1,457	P1	110	1.15	21.0	83.0	17.368	208-230	
		3600	184JM	00536ES1E184JM	1,457	P1	110	1.15	10.5	83.0	17.368	208-230/460	
		1800	184JM	00518ES1E184JM	1,430	P1	120	1.15	10.7	79.0	17.368	208-230/460	
7.5	5.5	3600	213JM	00736ES1C213JM	1,641	P1	149	1.15	29.8	86.0	18.904	208-230	
		3600	213JM	00736ES1E213JM	1,641	P1	149	1.15	14.9	86.0	18.904	208-230/460	
		1800	215JM	00718ES1C215JM	1,766	P1	163	1.15	34.0	83.0	20.400	208-230	
		1800	215JM	00718ES1E215JM	1,762	P1	164	1.15	17.0	83.0	20.400	208-230/460	
10	7.5	3600	215JM	01036ES1C215JM	2,172	P1	162	1.15	38.8	86.0	20.400	208-230	
		3600	215JM	01036ES1E215JM	2,172	P1	162	1.15	19.4	86.0	20.400	208-230/460	
		1800	215JM	01018ES1C215JM	2,057	P1	187	1.15	39.0	84.0	20.400	208-230	
		1800	215JM	01018ES1E215JM	2,057	P1	179	1.15	19.5	84.0	20.400	208-230/460	

JP – TEFC – Single-Phase

HP	kW	RPM	NEMA Frame	Catalog Number	List Price	Mult. Symbol	Approx. Shipping Weight (lbs)	Service Factor	FL Amps @ High	FL. Eff (%)	"C" Dimension (in)	Voltage (V)	Notes
0.50	0.37	3600	143JP	.5036ES1E143JP	668	P1	26	1.15	1.90	60.0	18.519	208-230/460	
1	0.75	1800	143JP	00118ES1E143JP	687	P1	61	1.15	2.65	75.0	18.519	208-230/460	
1.5	1.1	3600	143JP	00156ES1E143JP	729	P1	37	1.15	3.90	73.0	18.519	208-230/460	
		1800	145JP	00158ES1E145JP	754	P1	49	1.15	3.60	77.0	19.519	208-230/460	
2	1.5	3600	145JP	00236ES1E145JP	770	P1	45	1.15	4.90	79.0	19.519	208-230/460	
		1800	145JP	00218ES1E145JP	814	P1	54	1.15	4.60	78.0	19.519	208-230/460	
3	2.2	3600	145JP	00336ES1E145JP	1,076	P1	67	1.15	6.75	79.0	19.519	208-230/460	
		1800	184JP	00318ES1E184JP	1,182	P1	131	1.15	6.80	77.0	20.429	208-230/460	
5	3.7	3600	184JP	00536ES1E184JP	1,457	P1	117	1.15	10.5	83.0	20.429	208-230/460	
		1800	184JP	00518ES1E184JP	1,430	P1	153	1.15	10.7	79.0	20.429	208-230/460	
7.5	5.5	3600	213JP	00736ES1E213JP	1,641	P1	163	1.15	14.9	86.0	22.776	208-230/460	
		1800	215JP	00718ES1E215JP	1,762	P1	178	1.15	17.0	83.0	24.272	208-230/460	
10	7.5	3600	215JP	01036ES1E215JP	2,172	P1	177	1.15	19.4	86.0	24.272	208-230/460	
		1800	215JP	01018ES1E215JP	2,057	P1	202	1.15	19.5	84.0	24.272	208-230/460	

Note: Flanged motors on Cast Iron frame sizes 143/5 to 254/6 have non-NEMA BA dimension. Refer to mechanical section of this catalog for details.

Refer to electrical and mechanical data sections for additional technical information. Please refer to back cover for description of "NOTES"

For detailed specifications, data sheets, drawings and performance curves visit http://catalog.wegelectric.com

Data subject to change without notice.



CLOSE-COUPLED PUMP TEFC MOTORS
JM – TEFC – Three-Phase

HP	kW	RPM	NEMA Frame	Catalog Number	List Price	Mult. Symbol	Approx. Shipping Weight (lbs)	Service Factor	FL Amps @ High	FL. Eff (%)	"C" Dimension (in)	Voltage (V)	Notes
1	0.75	1800	143/5JM	00118EP3E143JM-S	497	P1S	37	1.15	1.56	82.5	15.709	208-230/460	9;30
		1800	143/5JM	00118EP3E143JM-W22	497	P1	52	1.25	1.44	82.5	15.304	208-230/460	30
		1800	143/5JM	00118EP3H143JM-S	497	P1S	37	1.15	1.25	82.5	15.709	575	9;30
		1800	143/5JM	00118EP3H143JM-W22	497	P1	50	1.25	1.15	82.5	15.304	575	30
		1800	143/5JM	00118ET3E143JM-S	613	P1S	43	1.15	1.47	85.5	15.709	208-230/460	9
		1800	143/5JM	00118ET3E143JM-W22	613	P1	53	1.25	1.41	85.5	15.304	208-230/460	
		1800	143/5JM	00118ET3H143JM-S	613	P1S	43	1.15	1.17	85.5	15.709	575	9
		1800	143/5JM	00118ET3H143JM-W22	613	P1	49	1.25	1.13	85.5	15.304	575	
		1200	143/5JM	00112ET3E145JM-S	700	P1S	43	1.15	1.58	82.5	15.709	208-230/460	9
		1200	143/5JM	00112ET3E145JM-W22	700	P1	55	1.25	1.73	82.5	15.304	208-230/460	
1.5	1.1	3600	143/5JM	00156EP3E143JM-S	527	P1S	36	1.15	1.90	82.5	15.709	208-230/460	9;30
		3600	143/5JM	00156EP3E143JM-W22	527	P1	49	1.25	1.99	82.5	15.304	208-230/460	30
		3600	143/5JM	00156ET3E143JM-S	710	P1S	39	1.15	1.87	84	15.709	208-230/460	9
		3600	143/5JM	00156ET3E143JM-W22	710	P1	53	1.25	1.91	84.0	15.304	208-230/460	
		1800	143/5JM	00158EP3E145JM-S	509	P1S	43	1.15	2.16	84	15.709	208-230/460	9;30
		1800	143/5JM	00158EP3E145JM-W22	509	P1	58	1.25	2.03	84.0	15.304	208-230/460	30
		1800	143/5JM	00158EP3H145JM-S	509	P1S	43	1.15	1.73	84	15.709	575	9;30
		1800	143/5JM	00158EP3H145JM-W22	509	P1	56	1.25	1.62	84.0	15.304	575	30
		1800	143/5JM	00158ET3E145JM-S	643	P1S	43	1.15	2.02	86.5	15.709	208-230/460	9
		1800	143/5JM	00158ET3E145JM-W22	643	P1	60	1.25	2.02	86.5	15.304	208-230/460	
		1800	143/5JM	00158ET3H145JM-S	643	P1S	43	1.15	1.62	86.5	15.709	575	9
		1800	143/5JM	00158ET3H145JM-W22	643	P1	58	1.25	1.62	86.5	15.304	575	
		1200	182/4JM	00152ET3E182JM-S	909	P1S	73	1.15	2.22	87.5	17.835	208-230/460	9
		1200	182/4JM	00152ET3E182JM-W22	909	P1	74	1.25	2.39	87.5	17.020	208-230/460	
2	1.5	3600	143/5JM	00236EP3E145JM-S	583	P1S	41	1.15	2.55	84	15.709	208-230/460	9;30
		3600	143/5JM	00236EP3E145JM-W22	583	P1	56	1.25	2.64	84.0	15.304	208-230/460	30
		3600	143/5JM	00236EP3H145JM-S	583	P1S	41	1.15	2.04	84	15.709	575	9;30
		3600	143/5JM	00236EP3H145JM-W22	583	P1	57	1.25	2.11	84.0	15.304	575	30
		3600	143/5JM	00236ET3E145JM-S	683	P1S	45	1.15	2.47	85.5	16.102	208-230/460	9
		3600	143/5JM	00236ET3E145JM-W22	683	P1	62	1.25	2.53	85.5	15.304	208-230/460	
		1800	143/5JM	00218EP3E145JM-S	560	P1S	47	1.15	2.95	84.0	16.496	208-230/460	9;30
		1800	143/5JM	00218EP3E145JM-W22	560	P1	57	1.25	2.73	84.0	15.304	208-230/460	30
		1800	143/5JM	00218EP3H145JM-S	560	P1S	47	1.15	2.36	84.0	16.496	575	9;30
		1800	143/5JM	00218EP3H145JM-W22	560	P1	59	1.25	2.18	84.0	15.304	575	30
		1800	143/5JM	00218ET3E145JM-S	707	P1S	47	1.15	2.72	86.5	16.102	208-230/460	9
		1800	143/5JM	00218ET3E145JM-W22	707	P1	63	1.25	2.61	86.5	15.304	208-230/460	
		1800	143/5JM	00218ET3H145JM-S	707	P1S	47	1.15	2.18	86.5	16.102	575	9
		1800	143/5JM	00218ET3H145JM-W22	707	P1	62	1.25	2.09	86.5	15.304	575	
		1200	182/4JM	00212ET3E184JM-S	1,021	P1S	83	1.15	3.00	88.5	18.622	208-230/460	9
		1200	182/4JM	00212ET3E184JM-W22	1,021	P1	101	1.25	3.23	88.5	17.020	208-230/460	

Note: Flanged motors on Cast Iron frame sizes 143/5 to 254/6 have non-NEMA BA dimension. Refer to mechanical section of this catalog for details.

Continued on next page

Refer to electrical and mechanical data sections for additional technical information. Please refer to back cover for description of "NOTES"

For detailed specifications, data sheets, drawings and performance curves visit http://catalog.wegelectric.com

CLOSE-COUPLED PUMP TEFC MOTORS

JM – TEFC – Three-Phase *continued*

HP	kW	RPM	NEMA Frame	Catalog Number	List Price	Mult. Symbol	Approx. Shipping Weight (lbs)	Service Factor	FL Amps @ High	FL. Eff (%)	"C" Dimension (in)	Voltage (V)	Notes
3	2.2	3600	143/5JM	00336EP3E145JM-S	647	P1S	50	1.15	3.55	85.5	16.496	208-230/460	9;30
		3600	143/5JM	00336EP3E145JM-W22	647	P1	65	1.15	3.76	85.5	15.304	208-230/460	30
		3600	182/4JM	00336EP3E182JM-S	744	P1S	67	1.15	3.80	85.5	17.835	208-230/460	9;30
		3600	182/4JM	00336EP3E182JM-W22	744	P1	90	1.25	3.67	85.5	17.020	208-230/460	30
		3600	143/5JM	00336EP3H145JM-S	647	P1S	50	1.15	2.84	85.5	16.496	575	9;30
		3600	143/5JM	00336EP3H145JM-W22	647	P1	56	1.15	3.01	85.5	15.304	575	30
		3600	182/4JM	00336ET3E182JM-S	918	P1S	71	1.15	3.67	86.5	17.835	208-230/460	9
		3600	182/4JM	00336ET3E182JM-W22	918	P1	104	1.25	3.63	86.5	17.020	208-230/460	
		3600	182/4JM	00336ET3H182JM-S	918	P1S	71	1.15	2.94	86.5	17.835	575	9
		3600	182/4JM	00336ET3H182JM-W22	918	P1	96	1.25	2.90	86.5	17.020	575	
		1800	182/4JM	00318EP3E182JM-S	886	P1S	71	1.15	4.05	87.5	17.835	208-230/460	9;30
		1800	182/4JM	00318EP3E182JM-W22	886	P1	91	1.25	3.85	87.5	17.020	208-230/460	30
		1800	182/4JM	00318EP3H182JM-S	886	P1S	71	1.15	3.24	87.5	17.835	575	9;30
		1800	182/4JM	00318EP3H182JM-W22	886	P1	90	1.25	3.08	87.5	17.020	575	30
		1800	182/4JM	00318ET3E182JM-S	1,022	P1S	87	1.15	3.81	89.5	19.390	208-230/460	9
		1800	182/4JM	00318ET3E182JM-W22	1,022	P1	94	1.25	3.88	89.5	17.020	208-230/460	
		1800	182/4JM	00318ET3H182JM-S	1,022	P1S	87	1.15	3.05	89.5	19.390	575	9
		1800	182/4JM	00318ET3H182JM-W22	1,022	P1	93	1.25	3.10	89.5	17.020	575	
		1200	213/5JM	00312ET3E213JM-S	1,423	P1S	142	1.15	4.17	89.5	20.433	208-230/460	9
		1200	213/5JM	00312ET3E213JM-W22	1,423	P1	126	1.25	4.41	89.5	20.174	208-230/460	
5	3.7	3600	182/4JM	00536EP3E184JM-S	922	P1S	76	1.15	5.96	87.5	18.228	208-230/460	9;30
		3600	182/4JM	00536EP3E184JM-W22	922	P1	94	1.25	5.90	87.5	17.020	208-230/460	30
		3600	182/4JM	00536EP3H184JM-S	922	P1S	76	1.15	4.77	87.5	18.228	575	9;30
		3600	182/4JM	00536EP3H184JM-W22	922	P1	93	1.25	4.72	87.5	17.020	575	30
		3600	182/4JM	00536ET3E184JM-S	1,075	P1S	86	1.15	5.90	88.5	19.390	208-230/460	9
		3600	182/4JM	00536ET3E184JM-W22	1,075	P1	106	1.25	5.90	88.5	17.020	208-230/460	
		3600	182/4JM	00536ET3H184JM-S	1,075	P1S	86	1.15	4.72	88.5	19.390	575	9
		3600	182/4JM	00536ET3H184JM-W22	1,075	P1	99	1.25	4.72	88.5	17.020	575	
		1800	182/4JM	00518EP3E184JM-S	993	P1S	84	1.15	6.55	87.5	19.390	208-230/460	9;30
		1800	182/4JM	00518EP3E184JM-W22	993	P1	100	1.25	6.49	87.5	17.020	208-230/460	30
		1800	182/4JM	00518EP3H184JM-S	993	P1S	84	1.15	5.24	87.5	19.390	575	9;30
		1800	182/4JM	00518EP3H184JM-W22	993	P1	95	1.25	5.19	87.5	17.020	575	30
		1800	182/4JM	00518EP3P184JM-S	993	P1S	84	1.15	15.1	87.5	19.390	200	9;30
		1800	182/4JM	00518EP3P184JM-W22	993	P1	95	1.25	14.9	87.5	17.020	200	30
		1800	182/4JM	00518ET3E184JM-S	1,141	P1S	79	1.15	6.49	89.5	19.390	208-230/460	9
		1800	182/4JM	00518ET3E184JM-W22	1,141	P1	102	1.25	6.45	89.5	17.020	208-230/460	
		1800	182/4JM	00518ET3H184JM-S	1,141	P1S	79	1.15	5.19	89.5	19.390	575	9
		1800	182/4JM	00518ET3H184JM-W22	1,141	P1	97	1.25	5.16	89.5	17.020	575	
		1200	213/5JM	00512ET3E215JM-S	1,769	P1S	156	1.15	6.74	89.5	21.220	208-230/460	9
		1200	213/5JM	00512ET3E215JM-W22	1,769	P1	167	1.25	6.83	89.5	20.174	208-230/460	

Continued on next page

Note: Flanged motors on Cast Iron frame sizes 143/5 to 254/6 have non-NEMA BA dimension. Refer to mechanical section of this catalog for details.

Refer to electrical and mechanical data sections for additional technical information. Please refer to back cover for description of "NOTES"

For detailed specifications, data sheets, drawings and performance curves visit http://catalog.wegelectric.com

Data subject to change without notice.

CLOSE-COUPLED PUMP TEFC MOTORS

JM – TEFC – Three-Phase *continued*

HP	kW	RPM	NEMA Frame	Catalog Number	List Price	Mult. Symbol	Approx. Shipping Weight (lbs)	Service Factor	FL Amps @ High	FL. Eff (%)	"C" Dimension (in)	Voltage (V)	Notes
7.5	5.5	3600	182/4JM	00736EP3E184JM-S	1,125	P1S	84	1.15	8.67	88.5	18.622	208-230/460	9;30
		3600	182/4JM	00736EP3E184JM-W22	1,125	P1	106	1.15	8.48	88.5	17.020	208-230/460	30
		3600	213/5JM	00736EP3E213JM-S	1,277	P1S	129	1.15	8.76	88.5	20.433	208-230/460	9;30
		3600	213/5JM	00736EP3E213JM-W22	1,277	P1	152	1.25	8.86	88.5	20.174	208-230/460	30
		3600	182/4JM	00736EP3H184JM-S	1,125	P1S	84	1.15	6.94	88.5	18.622	575	9;30
		3600	182/4JM	00736EP3H184JM-W22	1,125	P1	100	1.15	6.78	88.5	17.020	575	30
		3600	213/5JM	00736EP3H213JM-S	1,277	P1S	129	1.15	7.01	88.5	20.433	575	9;30
		3600	213/5JM	00736EP3H213JM-W22	1,277	P1	151	1.25	7.09	88.5	20.174	575	30
		3600	213/5JM	00736ET3E213JM-S	1,419	P1S	144	1.15	8.67	89.5	20.433	208-230/460	9
		3600	213/5JM	00736ET3E213JM-W22	1,419	P1	154	1.25	8.76	89.5	20.174	208-230/460	
		1800	213/5JM	00718EP3E213JM-S	1,256	P1S	134	1.15	9.07	89.5	20.433	208-230/460	9;30
		1800	213/5JM	00718EP3E213JM-W22	1,256	P1	159	1.25	9.31	89.5	20.174	208-230/460	30
		1800	213/5JM	00718EP3H213JM-S	1,256	P1S	134	1.15	7.26	89.5	20.433	575	9;30
		1800	213/5JM	00718EP3H213JM-W22	1,256	P1	144	1.25	7.45	89.5	20.174	575	30
		1800	213/5JM	00718ET3E213JM-S	1,519	P1S	131	1.15	9.07	91.7	20.039	208-230/460	9
		1800	213/5JM	00718ET3E213JM-W22	1,519	P1	173	1.25	9.00	91.7	20.174	208-230/460	
		1200	254/6JM	00712ET3E254JM-S	2,455	P1S	248	1.15	9.98	91	24.055	208-230/460	9
		1200	254/6JM	00712ET3E254JM-W22	2,455	P1	282	1.25	9.48	91.0	26.102	208-230/460	
10	7.5	3600	213/5JM	01036EP3E215JM-S	1,581	P1S	144	1.15	11.8	89.5	21.220	208-230/460	9;30
		3600	213/5JM	01036EP3E215JM-W22	1,581	P1	169	1.25	11.8	89.5	20.174	208-230/460	30
		3600	213/5JM	01036EP3H215JM-S	1,581	P1S	144	1.15	9.50	89.5	21.220	575	9;30
		3600	213/5JM	01036EP3H215JM-W22	1,581	P1	168	1.25	9.44	89.5	20.174	575	30
		3600	213/5JM	01036ET3E215JM-S	1,769	P1S	173	1.15	11.5	90.2	22.795	208-230/460	9
		3600	213/5JM	01036ET3E215JM-W22	1,769	P1	185	1.25	11.6	90.2	20.174	208-230/460	
		3600	213/5JM	01036ET3H215JM-S	1,769	P1S	173	1.15	9.20	90.2	22.795	575	9
		3600	213/5JM	01036ET3H215JM-W22	1,769	P1	177	1.25	9.28	90.2	20.174	575	
		1800	213/5JM	01018EP3E215JM-S	1,502	P1S	152	1.15	12.1	89.5	21.614	208-230/460	9;30
		1800	213/5JM	01018EP3E215JM-W22	1,502	P1	175	1.25	12.5	89.5	20.174	208-230/460	30
		1800	213/5JM	01018ET3E215JM-S	1,792	P1S	142	1.15	12.2	91.7	20.433	208-230/460	9
		1800	213/5JM	01018ET3E215JM-W22	1,792	P1	191	1.25	12.4	91.7	20.174	208-230/460	
		1200	254/6JM	01012ET3E256JM-S	2,979	P1S	277	1.15	13.8	91	24.843	208-230/460	9
		1200	254/6JM	01012ET3E256JM-W22	2,979	P1	309	1.25	12.9	91.0	26.102	208-230/460	

Continued on next page

Note: Flanged motors on Cast Iron frame sizes 143/5 to 254/6 have non-NEMA BA dimension. Refer to mechanical section of this catalog for details.

CLOSE-COUPLED PUMP TEFC MOTORS

JM – TEFC – Three-Phase *continued*

HP	kW	RPM	NEMA Frame	Catalog Number	List Price	Mult. Symbol	Approx. Shipping Weight (lbs)	Service Factor	FL Amps @ High	FL. Eff (%)	"C" Dimension (in)	Voltage (V)	Notes
		3600	213/5JM	01536EP3E215JM-S	1,803	P1S	159	1.15	17.2	90.2	22.795	208-230/460	9;30
		3600	213/5JM	01536EP3E215JM-W22	1,803	P1	185	1.15	16.8	90.2	20.174	208-230/460	30
		3600	254/6JM	01536EP3E254JM-S	2,029	P1S	200	1.15	18.0	90.2	24.055	208-230/460	9;30
		3600	254/6JM	01536EP3E254JM-W22	2,029	P1	287	1.25	17.4	90.2	26.102	208-230/460	30
		3600	213/5JM	01536EP3H215JM-S	1,803	P1S	159	1.15	13.8	90.2	22.795	575	9;30
		3600	213/5JM	01536EP3H215JM-W22	1,803	P1	177	1.15	13.4	90.2	20.174	575	30
		3600	254/6JM	01536EP3H254JM-S	2,029	P1S	200	1.15	14.4	90.2	24.055	575	9;30
		3600	254/6JM	01536EP3H254JM-W22	2,029	P1	287	1.25	13.9	90.2	26.102	575	30
		3600	213/5JM	01536ET3E215JM-S	2,058	P1S	181	1.15	17.1	91.0	22.795	208-230/460	9
		3600	213/5JM	01536ET3E215JM-W22	2,058	P1	178	1.25	17.0	91.0	20.174	208-230/460	
		3600	254/6JM	01536ET3E254JM-S	2,214	P1S	220	1.15	17.4	91	24.055	208-230/460	9
		3600	254/6JM	01536ET3E254JM-W22	2,214	P1	288	1.25	17.2	91.0	26.102	208-230/460	
15	11	3600	213/5JM	01536ET3H215JM-S	2,058	P1S	181	1.15	13.7	91.0	22.795	575	9
		3600	213/5JM	01536ET3H215JM-W22	2,058	P1	177	1.25	13.6	91.0	20.174	575	
		3600	254/6JM	01536ET3H254JM-S	2,214	P1S	220	1.15	14.0	91	24.055	575	9
		3600	254/6JM	01536ET3H254JM-W22	2,214	P1	287	1.25	13.8	91.0	26.102	575	
		1800	254/6JM	01518EP3E254JM-S	2,256	P1S	214	1.15	18.7	91	24.055	208-230/460	9;30
		1800	254/6JM	01518EP3E254JM-W22	2,256	P1	289	1.25	17.8	91.0	26.102	208-230/460	30
		1800	254/6JM	01518EP3H254JM-S	2,256	P1S	214	1.15	15.0	91	24.055	575	9;30
		1800	254/6JM	01518EP3H254JM-W22	2,256	P1	288	1.25	14.2	91.0	26.102	575	30
		1800	254/6JM	01518ET3E254JM-S	2,609	P1S	242	1.15	18.2	92.4	24.055	208-230/460	9
		1800	254/6JM	01518ET3E254JM-W22	2,609	P1	341	1.25	18.0	92.4	26.102	208-230/460	
		1800	254/6JM	01518ET3H254JM-S	2,609	P1S	242	1.15	14.6	92.4	24.055	575	9
		1800	254/6JM	01518ET3H254JM-W22	2,609	P1	335	1.25	14.4	92.4	26.102	575	
		1200	284/6JM	01512ET3E284JM-W22	3,912	P1	415	1.25	17.9	91.7	28.700	208-230/460	

Continued on next page

Note: Flanged motors on Cast Iron frame sizes 143/5 to 254/6 have non-NEMA BA dimension. Refer to mechanical section of this catalog for details.

Refer to electrical and mechanical data sections for additional technical information. Please refer to back cover for description of "NOTES"

For detailed specifications, data sheets, drawings and performance curves visit http://catalog.wegelectric.com

Data subject to change without notice.

JM – TEFC – Three-Phase *continued*

HP	kW	RPM	NEMA Frame	Catalog Number	List Price	Mult. Symbol	Approx. Shipping Weight (lbs)	Service Factor	FL Amps @ High	FL. Eff (%)	"C" Dimension (in)	Voltage (V)	Notes
		3600	254/6JM	02036EP3E256JM-S	2,568	P1S	238	1.15	23.5	90.2	24.055	208-230/460	9;30
		3600	254/6JM	02036EP3E256JM-W22	2,568	P1	306	1.25	23.7	90.2	26.102	208-230/460	30
		3600	254/6JM	02036EP3H256JM-S	2,568	P1S	238	1.15	18.8	90.2	24.055	575	9;30
		3600	254/6JM	02036EP3H256JM-W22	2,568	P1	285	1.25	19.0	90.2	26.102	575	30
		3600	254/6JM	02036ET3E256JM-S	2,965	P1S	256	1.15	22.7	91	24.055	208-230/460	9
		3600	254/6JM	02036ET3E256JM-W22	2,965	P1	314	1.25	23.2	91.0	26.102	208-230/460	
20	15	1800	254/6JM	02018EP3E256JM-S	2,490	P1S	242	1.15	24.9	91	24.055	208-230/460	9;30
		1800	254/6JM	02018EP3E256JM-W22	2,490	P1	317	1.25	24.3	91.0	26.102	208-230/460	30
		1800	254/6JM	02018ET3E256JM-S	2,857	P1S	271	1.15	24.5	92.4	24.843	208-230/460	9
		1800	254/6JM	02018ET3E256JM-W22	2,857	P1	363	1.25	24.1	93.0	26.102	208-230/460	
		1800	254/6JM	02018ET3H256JM-S	2,857	P1S	271	1.15	19.6	92.4	24.843	575	9
		1800	254/6JM	02018ET3H256JM-W22	2,857	P1	363	1.25	19.3	93.0	26.102	575	
		1200	284/6JM	02012ET3E286JM-W22	4,940	P1	460	1.25	24.2	91.7	28.700	208-230/460	
		3600	254/6JM	02536EP3E256JM-S	2,803	P1S	266	1.15	28.7	91.0	24.843	208-230/460	9;30
		3600	254/6JM	02536EP3E256JM-W22	2,803	P1	322	1.15	28.4	91.0	26.102	208-230/460	30
		3600	284/6JM	02536EP3E284JM-W22	2,989	P1	394	1.25	29.0	91.0	28.700	208-230/460	30
		3600	254/6JM	02536EP3H256JM-W22	2,803	P1	437	1.25	22.7	91.0	26.102	575	30
25	18.5	3600	284/6JM	02536ET3E284JM-W22	3,619	P1	416	1.25	28.5	91.7	28.700	208-230/460	
		1800	284/6JM	02518EP3E284JM-W22	3,186	P1	433	1.25	29.2	92.4	28.700	208-230/460	30
		1800	284/6JM	02518ET3E284JM-W22	3,734	P1	441	1.25	29.5	93.6	28.700	208-230/460	
		1200	324/6JM	02512ET3E324JM-W22	5,546	P1	579	1.25	30.4	93.0	29.645	208-230/460	
		3600	284/6JM	03036EP3E286JM-W22	3,797	P1	424	1.25	33.7	91.0	28.700	208-230/460	30
		3600	284/6JM	03036ET3E286JM-W22	4,539	P1	447	1.25	33.8	91.7	28.700	208-230/460	
		1800	284/6JM	03018EP3E286JM-W22	3,559	P1	463	1.25	34.3	92.4	28.700	208-230/460	30
30	22	1800	284/6JM	03018EP3H286JM-W22	3,559	P1	446	1.25	27.4	92.4	28.700	575	30
		1800	284/6JM	03018ET3E286JM-W22	4,096	P1	493	1.25	35.1	93.6	28.700	208-230/460	
		1200	324/6JM	03012ET3E326JM-W22	6,686	P1	583	1.25	35.8	93.0	29.645	208-230/460	
		3600	284/6JM	04036EP3E286JM-W22	4,353	P1	494	1.15	45.6	91.7	28.700	208-230/460	30
		3600	324/6JM	04036EP3E324JM-W22	4,746	P1	531	1.25	46.1	91.7	29.645	208-230/460	30
		3600	324/6JM	04036ET3E324JM-W22	5,534	P1	576	1.25	45.8	92.4	29.645	208-230/460	
40	30	1800	324/6JM	04018EP3E324JM-W22	4,803	P1	539	1.25	47.6	93.0	29.645	208-230/460	30
		1800	324/6JM	04018EP3H324JM-W22	4,803	P1	537	1.25	38.1	93.0	29.645	575	30
		1800	324/6JM	04018ET3E324JM-W22	5,316	P1	447	1.25	48.2	94.1	29.645	208-230/460	
		1200	364/5JM	04012ET3E364JM-W22	8,807	P1	947	1.25	46.5	94.1	33.031	208-230/460	

Continued on next page

Note: Flanged motors on Cast Iron frame sizes 143/5 to 254/6 have non-NEMA BA dimension. Refer to mechanical section of this catalog for details.

CLOSE-COUPLED PUMP TEFC MOTORS

JM – TEFC – Three-Phase *continued*

HP	kW	RPM	NEMA Frame	Catalog Number	List Price	Mult. Symbol	Approx. Shipping Weight (lbs)	Service Factor	FL Amps @ High	FL. Eff (%)	"C" Dimension (in)	Voltage (V)	Notes
50	37	3600	324/6JM	05036EP3E326JM-W22	5,502	P1	579	1.25	56.5	92.4	29.645	208-230/460	30
	37	3600	324/6JM	05036ET3E326JM-W22	6,622	P1	614	1.25	56.1	93.0	29.645	208-230/460	
	37	1800	324/6JM	05018EP3E326JM-W22	5,500	P1	615	1.25	58.1	93.0	29.645	208-230/460	30
	37	1800	324/6JM	05018EP3H326JM-W22	5,500	P1	542	1.25	46.5	93.0	29.645	575	30
	37	1800	324/6JM	05018ET3E326JM-W22	6,513	P1	645	1.25	59.2	94.5	29.645	208-230/460	
	37	1200	364/5JM	05012ET3E365JM-W22	10,551	P1	983	1.25	57.4	94.1	33.031	208-230/460	
60	45	3600	324/6JM	06036EP3E326JM-W22	6,598	P1	617	1.15	69.0	93.0	29.645	208-230/460	30
	45	3600	364/5JM	06036EP3E364JM-W22	7,137	P1	928	1.25	67.5	93.0	33.031	208-230/460	30
	45	3600	364/5JM	06036ET3E364JM-W22	8,261	P1	941	1.25	67.0	93.6	33.031	208-230/460	
	45	1800	324/6JM	06018EP3E326JM-W22	7,349	P1	641	1.15	71.0	93.6	29.645	208-230/460	30
	45	1800	364/5JM	06018EP3E364JM-W22	7,805	P1	933	1.25	69.4	93.6	33.031	208-230/460	30
	45	1800	364/5JM	06018ET3E364JM-W22	8,912	P1	1037	1.25	68.3	95.0	33.031	208-230/460	
75	55	3600	364/5JM	07536EP3E364JM-W22	8,995	P1	995	1.25	82.5	93.0	33.031	208-230/460	30
	55	3600	364/5JM	07536ET3E365JM-W22	11,124	P1	992	1.25	81.9	93.6	33.031	208-230/460	
	55	1800	364/5JM	07518EP3E365JM-W22	8,860	P1	993	1.25	84.3	94.1	33.031	208-230/460	30
	55	1800	364/5JM	07518ET3E365JM-W22	10,057	P1	1039	1.25	84.1	95.4	33.031	208-230/460	
100	75	3600	404/5TCZ	10036ET3E405JM-W22	13,093	P1	1220	1.25	110	94.1	37.724	208-230/460	
	75	3600	404/5TCZ	10036ET3G405JM-W22	13,093	P1	1215	1.25	110	94.1	37.724	460	
	75	1800	404/5TCZ	10018ET3E405JM-W22	12,300	P1	1321	1.25	111	95.4	37.724	208-230/460	
	75	1800	404/5TCZ	10018ET3G405JM-W22	12,300	P1	1318	1.25	111	95.4	37.724	460	

Note: Flanged motors on Cast Iron frame sizes 143/5 to 254/6 have non-NEMA BA dimension. Refer to mechanical section of this catalog for details.

Refer to electrical and mechanical data sections for additional technical information. Please refer to back cover for description of "NOTES"

For detailed specifications, data sheets, drawings and performance curves visit http://catalog.wegelectric.com

Data subject to change without notice.



CLOSE-COUPLED PUMP TEFC MOTORS

JP – TEFC – Three-Phase

HP	kW	RPM	NEMA Frame	Catalog Number	List Price	Mult. Symbol	Approx. Shipping Weight (lbs)	Service Factor	FL Amps @ High	FL. Eff (%)	"C" Dimension (in)	Voltage (V)	Notes
1	0.75	1800	143/5JP	00118EP3E143JP-S	508	P1S	37	1.15	1.56	82.5	18.780	208-230/460	9;30
		1800	143/5JP	00118EP3E143JP-W22	508	P1	51	1.25	1.44	82.5	18.365	208-230/460	30
		1800	143/5JP	00118ET3E143JP-S	624	P1S	43	1.15	1.47	85.5	18.780	208-230/460	9
		1800	143/5JP	00118ET3E143JP-W22	624	P1	50	1.25	1.41	85.5	18.365	208-230/460	
		1200	143/5JP	00112ET3E145JP-S	714	P1S	43	1.15	1.58	82.5	18.780	208-230/460	9
		1200	143/5JP	00112ET3E145JP-W22	714	P1	55	1.25	1.73	82.5	18.365	208-230/460	
1.5	1.1	3600	143/5JP	00156EP3E143JP-S	537	P1S	36	1.15	1.90	82.5	18.780	208-230/460	9;30
		3600	143/5JP	00156EP3E143JP-W22	537	P1	48	1.25	1.99	82.5	18.365	208-230/460	30
		3600	143/5JP	00156ET3E143JP-S	649	P1S	39	1.15	1.87	84	18.780	208-230/460	9
		3600	143/5JP	00156ET3E143JP-W22	649	P1	51	1.25	1.91	84.0	18.365	208-230/460	
		1800	143/5JP	00158EP3E145JP-S	519	P1S	43	1.15	2.16	84	18.780	208-230/460	9;30
		1800	143/5JP	00158EP3E145JP-W22	519	P1	57	1.25	2.03	84.0	18.365	208-230/460	30
		1800	143/5JP	00158ET3E145JP-S	653	P1S	43	1.15	2.02	86.5	18.780	208-230/460	9
		1800	143/5JP	00158ET3E145JP-W22	653	P1	62	1.25	2.02	86.5	18.365	208-230/460	
		1200	182/4JP	00152ET3E182JP-S	924	P1S	73	1.15	2.22	87.5	20.906	208-230/460	9
		1200	182/4JP	00152ET3E182JP-W22	924	P1	74	1.25	2.39	87.5	20.395	208-230/460	
2	1.5	3600	143/5JP	00236EP3E145JP-S	594	P1S	41	1.15	2.55	84	18.780	208-230/460	9;30
		3600	143/5JP	00236EP3E145JP-W22	594	P1	58	1.25	2.64	84.0	18.365	208-230/460	30
		3600	143/5JP	00236ET3E145JP-S	694	P1S	45	1.15	2.47	85.5	19.173	208-230/460	9
		3600	143/5JP	00236ET3E145JP-W22	694	P1	54	1.25	2.53	85.5	18.365	208-230/460	
		1800	143/5JP	00218EP3E145JP-S	571	P1S	47	1.15	2.95	84	19.567	208-230/460	9;30
		1800	143/5JP	00218EP3E145JP-W22	571	P1	60	1.25	2.73	84.0	18.365	208-230/460	30
		1800	143/5JP	00218ET3E145JP-S	718	P1S	47	1.15	2.72	86.5	19.173	208-230/460	9
		1800	143/5JP	00218ET3E145JP-W22	718	P1	60	1.25	2.61	86.5	18.365	208-230/460	
		1200	182/4JP	00212ET3E184JP-S	1,040	P1S	83	1.15	3.00	88.5	21.693	208-230/460	9
		1200	182/4JP	00212ET3E184JP-W22	1,040	P1	91	1.25	3.23	88.5	20.395	208-230/460	
3	2.2	3600	143/5JP	00336EP3E145JP-S	632	P1S	50	1.15	3.55	85.5	19.567	208-230/460	9;30
		3600	143/5JP	00336EP3E145JP-W22	632	P1	56	1.15	3.76	85.5	18.365	208-230/460	30
		3600	182/4JP	00336EP3E182JP-S	759	P1S	67	1.15	3.80	85.5	20.906	208-230/460	9;30
		3600	182/4JP	00336EP3E182JP-W22	759	P1	97	1.25	3.67	85.5	20.395	208-230/460	30
		3600	182/4JP	00336ET3E182JP-S	933	P1S	71	1.15	3.67	86.5	20.906	208-230/460	9
		3600	182/4JP	00336ET3E182JP-W22	933	P1	103	1.25	3.63	86.5	20.395	208-230/460	
		1800	182/4JP	00318EP3E182JP-S	905	P1S	71	1.15	4.05	87.5	20.906	208-230/460	9;30
		1800	182/4JP	00318EP3E182JP-W22	905	P1	95	1.25	3.85	87.5	20.395	208-230/460	30
		1800	182/4JP	00318ET3E182JP-S	1,041	P1S	87	1.15	3.81	89.5	22.461	208-230/460	9
		1800	182/4JP	00318ET3E182JP-W22	1,041	P1	100	1.25	3.88	89.5	20.395	208-230/460	
		1200	213/5JP	00312ET3E213JP-S	1,449	P1S	142	1.15	4.17	89.5	24.291	208-230/460	9
		1200	213/5JP	00312ET3E213JP-W22	1,449	P1	126	1.25	4.41	89.5	24.046	208-230/460	

Continued on next page

Note: Flanged motors on Cast Iron frame sizes 143/5 to 254/6 have non-NEMA BA dimension. Refer to mechanical section of this catalog for details.

CLOSE-COUPLED PUMP TEFC MOTORS

JP – TEFC – Three-Phase *continued*

HP	kW	RPM	NEMA Frame	Catalog Number	List Price	Mult. Symbol	Approx. Shipping Weight (lbs)	Service Factor	FL Amps @ High	FL. Eff (%)	"C" Dimension (in)	Voltage (V)	Notes
5	3.7	3600	182/4JP	00536EP3E184JP-S	941	P1S	76	1.15	5.96	87.5	21.299	208-230/460	9;30
		3600	182/4JP	00536EP3E184JP-W22	941	P1	105	1.25	5.90	87.5	20.395	208-230/460	30
		3600	182/4JP	00536ET3E184JP-S	1,094	P1S	86	1.15	5.90	88.5	22.461	208-230/460	9
		3600	182/4JP	00536ET3E184JP-W22	1,094	P1	113	1.25	5.90	88.5	20.395	208-230/460	
		1800	182/4JP	00518EP3E184JP-S	1,013	P1S	84	1.15	6.55	87.5	22.461	208-230/460	9;30
		1800	182/4JP	00518EP3E184JP-W22	1,013	P1	106	1.25	6.49	87.5	20.395	208-230/460	30
		1800	182/4JP	00518EP3H184JP-S	1,013	P1S	84	1.15	5.24	87.5	22.461	575	9;30
		1800	182/4JP	00518EP3H184JP-W22	1,013	P1	96	1.25	5.19	87.5	20.395	575	30
		1800	182/4JP	00518ET3E184JP-S	1,161	P1S	79	1.15	6.49	89.5	22.461	208-230/460	9
		1800	182/4JP	00518ET3E184JP-W22	1,161	P1	109	1.25	6.45	89.5	20.395	208-230/460	
		1200	213/5JP	00512ET3E215JP-S	1,801	P1S	156	1.15	6.74	89.5	25.079	208-230/460	9
		1200	213/5JP	00512ET3E215JP-W22	1,801	P1	189	1.25	6.83	89.5	24.046	208-230/460	
7.5	5.5	3600	182/4JP	00736EP3E184JP-S	1,146	P1S	84	1.15	8.67	88.5	21.693	208-230/460	9;30
		3600	182/4JP	00736EP3E184JP-W22	1,146	P1	112	1.15	8.48	88.5	20.395	208-230/460	30
		3600	213/5JP	00736EP3E213JP-S	1,303	P1S	129	1.15	8.76	88.5	24.291	208-230/460	9;30
		3600	213/5JP	00736EP3E213JP-W22	1,303	P1	165	1.25	8.86	88.5	24.046	208-230/460	30
		3600	213/5JP	00736ET3E213JP-S	1,445	P1S	144	1.15	8.67	89.5	24.291	208-230/460	9
		3600	213/5JP	00736ET3E213JP-W22	1,445	P1	168	1.25	8.76	89.5	24.046	208-230/460	
		1800	213/5JP	00718EP3E213JP-S	1,280	P1S	134	1.15	9.07	89.5	24.291	208-230/460	9;30
		1800	213/5JP	00718EP3E213JP-W22	1,280	P1	166	1.25	9.31	89.5	24.046	208-230/460	30
		1800	213/5JP	00718EP3H213JP-S	1,280	P1S	134	1.15	7.26	89.5	24.291	575	9;30
		1800	213/5JP	00718EP3H213JP-W22	1,280	P1	166	1.25	7.45	89.5	24.046	575	30
		1800	213/5JP	00718ET3E213JP-S	1,543	P1S	131	1.15	9.07	91.7	23.898	208-230/460	9
		1800	213/5JP	00718ET3E213JP-W22	1,543	P1	181	1.25	9.00	91.7	24.046	208-230/460	
		1800	213/5JP	00718ET3H213JP-S	1,543	P1S	131	1.15	7.26	91.7	23.898	575	9
		1800	213/5JP	00718ET3H213JP-W22	1,543	P1	181	1.25	7.20	91.7	24.046	575	
		1200	254/6JP	00712ET3E254JP-S	2,495	P1S	248	1.15	9.98	91	26.929	208-230/460	9
		1200	254/6JP	00712ET3E254JP-W22	2,495	P1	282	1.25	9.48	91.0	28.736	208-230/460	

Continued on next page

Note: Flanged motors on Cast Iron frame sizes 143/5 to 254/6 have non-NEMA BA dimension. Refer to mechanical section of this catalog for details.

CLOSE-COUPLED PUMP TEFC MOTORS

JP – TEFC – Three-Phase *continued*

HP	kW	RPM	NEMA Frame	Catalog Number	List Price	Mult. Symbol	Approx. Shipping Weight (lbs)	Service Factor	FL Amps @ High	FL. Eff (%)	"C" Dimension (in)	Voltage (V)	Notes
10	7.5	3600	213/5JP	01036EP3E215JP-S	1,613	P1S	144	1.15	11.8	89.5	25.079	208-230/460	9;30
		3600	213/5JP	01036EP3E215JP-W22	1,613	P1	182	1.25	11.8	89.5	24.046	208-230/460	30
		3600	213/5JP	01036ET3E215JP-S	1,801	P1S	173	1.15	11.5	90.2	26.654	208-230/460	9
		3600	213/5JP	01036ET3E215JP-W22	1,801	P1	191	1.25	11.6	90.2	24.046	208-230/460	
		1800	213/5JP	01018EP3E215JP-S	1,533	P1S	152	1.15	12.1	89.5	25.472	208-230/460	9;30
		1800	213/5JP	01018EP3E215JP-W22	1,533	P1	188	1.25	12.5	89.5	24.046	208-230/460	30
		1800	213/5JP	01018EP3H215JP-S	1,533	P1S	152	1.15	9.70	89.5	25.472	575	9;30
		1800	213/5JP	01018EP3H215JP-W22	1,533	P1	188	1.25	10.0	89.5	24.046	575	30
		1800	213/5JP	01018ET3E215JP-S	1,823	P1S	142	1.15	12.2	91.7	24.291	208-230/460	9
		1800	213/5JP	01018ET3E215JP-W22	1,823	P1	200	1.25	12.4	91.7	24.046	208-230/460	
		1800	213/5JP	01018ET3H215JP-S	1,823	P1S	142	1.15	9.80	91.7	24.291	575	9
		1800	213/5JP	01018ET3H215JP-W22	1,823	P1	196	1.25	9.92	91.7	24.046	575	
		1200	254/6JP	01012ET3E256JP-S	3,103	P1S	277	1.15	13.8	91	27.717	208-230/460	9
		1200	254/6JP	01012ET3E256JP-W22	3,103	P1	309	1.25	12.9	91.0	28.736	208-230/460	
15	11	3600	213/5JP	01536EP3E215JP-S	1,791	P1S	159	1.15	17.2	90.2	26.654	208-230/460	9;30
		3600	213/5JP	01536EP3E215JP-W22	1,791	P1	189	1.15	16.8	90.2	24.046	208-230/460	30
		3600	254/6JP	01536EP3E254JP-S	2,069	P1S	200	1.15	18.0	90.2	26.929	208-230/460	9;30
		3600	254/6JP	01536EP3E254JP-W22	2,069	P1	285	1.25	17.4	90.2	28.736	208-230/460	30
		3600	254/6JP	01536EP3V254JP-S	2,069	P1S	200	1.15	20.7	90.2	26.929	200/400	9;30
		3600	254/6JP	01536EP3V254JP-W22	2,069	P1	245	1.25	20.0	90.2	28.736	200/400	30
		3600	254/6JP	01536ET3E254JP-S	2,629	P1S	220	1.15	17.4	91	26.929	208-230/460	9
		3600	254/6JP	01536ET3E254JP-W22	2,629	P1	285	1.25	17.2	91.0	28.736	208-230/460	
		1800	254/6JP	01518EP3E254JP-S	2,300	P1S	214	1.15	18.7	91	26.929	208-230/460	9;30
		1800	254/6JP	01518EP3E254JP-W22	2,300	P1	287	1.25	17.8	91.0	28.736	208-230/460	30
		1800	254/6JP	01518EP3H254JP-S	2,300	P1S	214	1.15	15.0	91	26.929	575	9;30
		1800	254/6JP	01518EP3H254JP-W22	2,300	P1	247	1.25	14.2	91.0	28.736	575	30
		1800	254/6JP	01518ET3E254JP-S	2,653	P1S	242	1.15	18.2	92.4	26.929	208-230/460	9
		1800	254/6JP	01518ET3E254JP-W22	2,653	P1	334	1.25	18.0	92.4	28.736	208-230/460	
		1200	284/6JP	01512ET3E284JP-W22	3,972	P1	418	1.25	17.9	91.7	31.575	208-230/460	

Continued on next page

Note: Flanged motors on Cast Iron frame sizes 143/5 to 254/6 have non-NEMA BA dimension. Refer to mechanical section of this catalog for details.

CLOSE-COUPLED PUMP TEFC MOTORS

JP – TEFC – Three-Phase *continued*

HP	kW	RPM	NEMA Frame	Catalog Number	List Price	Mult. Symbol	Approx. Shipping Weight (lbs)	Service Factor	FL Amps @ High	FL. Eff (%)	"C" Dimension (in)	Voltage (V)	Notes
20	15	3600	254/6JP	02036EP3E256JP-S	2,621	P1S	238	1.15	23.5	90.2	26.929	208-230/460	9;30
		3600	254/6JP	02036EP3E256JP-W22	2,621	P1	302	1.25	23.7	90.2	28.736	208-230/460	30
		3600	254/6JP	02036EP3H256JP-S	2,451	P1S	238	1.15	18.8	90.2	26.929	575	9;30
		3600	254/6JP	02036EP3H256JP-W22	2,451	P1	285	1.25	19.0	90.2	28.736	575	30
		3600	254/6JP	02036ET3E256JP-S	3,018	P1S	256	1.15	22.7	91	26.929	208-230/460	9
		3600	254/6JP	02036ET3E256JP-W22	3,018	P1	310	1.25	23.2	91.0	28.736	208-230/460	
		1800	254/6JP	02018EP3E256JP-S	2,541	P1S	242	1.15	24.9	91	26.929	208-230/460	9;30
		1800	254/6JP	02018EP3E256JP-W22	2,541	P1	313	1.25	24.3	91.0	28.736	208-230/460	30
		1800	254/6JP	02018ET3E256JP-S	2,908	P1S	271	1.15	24.5	92.4	27.717	208-230/460	9
		1800	254/6JP	02018ET3E256JP-W22	2,908	P1	359	1.25	24.1	93.0	28.736	208-230/460	
		1200	284/6JP	02012ET3E286JP-W22	5,015	P1	453	1.25	24.2	91.7	31.575	208-230/460	
25	18.5	3600	254/6JP	02536EP3E256JP-S	2,790	P1S	266	1.15	28.7	91.0	27.717	208-230/460	9;30
		3600	254/6JP	02536EP3E256JP-W22	2,790	P1	318	1.15	28.4	91.0	28.736	208-230/460	30
		3600	284/6JP	02536EP3E284JP-W22	3,049	P1	396	1.25	29.0	91.0	31.575	208-230/460	30
		3600	254/6JP	02536EP3H256JP-S	2,790	P1S	266	1.15	23.0	91.0	27.717	575	9;30
		3600	254/6JP	02536EP3H256JP-W22	2,790	P1	318	1.15	22.7	91.0	28.736	575	30
		3600	284/6JP	02536ET3E284JP-W22	3,679	P1	416	1.25	28.5	91.7	31.575	208-230/460	
		1800	284/6JP	02518EP3E284JP-W22	3,249	P1	435	1.25	29.2	92.4	31.575	208-230/460	30
		1800	284/6JP	02518ET3E284JP-W22	3,797	P1	446	1.25	29.5	93.6	31.575	208-230/460	
		1800	284/6JP	02518ET3H284JP-W22	3,797	P1	445	1.25	23.6	93.6	31.575	575	
		1200	324/6JP	02512ET3E324JP-W22	5,972	P1	582	1.25	30.4	93.0	34.021	208-230/460	
30	22	3600	284/6JP	03036EP3E286JP-W22	3,872	P1	444	1.25	33.7	91.0	31.575	208-230/460	30
		3600	284/6JP	03036EP3V286JP-W22	3,872	P1	402	1.25	38.8	91.0	31.575	200/400	30
		3600	284/6JP	03036ET3E286JP-W22	4,614	P1	463	1.25	33.8	91.7	31.575	208-230/460	
		1800	284/6JP	03018EP3E286JP-W22	3,630	P1	483	1.25	34.3	92.4	31.575	208-230/460	30
		1800	284/6JP	03018EP3H286JP-W22	3,630	P1	482	1.25	27.4	92.4	31.575	575	30
		1800	284/6JP	03018ET3E286JP-W22	4,167	P1	511	1.25	35.1	93.6	31.575	208-230/460	
		1200	324/6JP	03012ET3E326JP-W22	6,690	P1	583	1.25	35.8	93.0	34.021	208-230/460	
40	30	3600	284/6JP	04036EP3E286JP-W22	4,545	P1	514	1.15	45.6	91.7	31.575	208-230/460	30
		3600	324/6JP	04036EP3E324JP-W22	4,840	P1	534	1.25	46.1	91.7	34.021	208-230/460	30
		3600	324/6JP	04036ET3E324JP-W22	5,628	P1	579	1.25	45.8	92.4	34.021	208-230/460	
		1800	324/6JP	04018EP3E324JP-W22	4,900	P1	541	1.25	47.6	93.0	34.021	208-230/460	30
		1800	324/6JP	04018ET3E324JP-W22	5,413	P1	604	1.25	48.2	94.1	34.021	208-230/460	
		1800	324/6JP	04018ET3H324JP-W22	5,413	P1	604	1.25	38.6	94.1	34.021	575	
		1200	364/5JP	04012ET3E364JP-W22	9,268	P1	974	1.25	46.5	94.1	35.916	208-230/460	

Continued on next page

Note: Flanged motors on Cast Iron frame sizes 143/5 to 254/6 have non-NEMA BA dimension. Refer to mechanical section of this catalog for details.

Refer to electrical and mechanical data sections for additional technical information. Please refer to back cover for description of "NOTES"

For detailed specifications, data sheets, drawings and performance curves visit http://catalog.wegelectric.com

Data subject to change without notice.

CLOSE-COUPLED PUMP TEFC MOTORS

JP – TEFC – Three-Phase *continued*

HP	kW	RPM	NEMA Frame	Catalog Number	List Price	Mult. Symbol	Approx. Shipping Weight (lbs)	Service Factor	FL Amps @ High	FL. Eff (%)	"C" Dimension (in)	Voltage (V)	Notes
50	37	3600	324/6JP	05036EP3E326JP-W22	5,613	P1	581	1.25	56.5	92.4	34.021	208-230/460	30
		3600	324/6JP	05036ET3E326JP-W22	6,733	P1	613	1.25	56.1	93.0	34.021	208-230/460	
		1800	324/6JP	05018EP3E326JP-W22	5,611	P1	618	1.25	58.1	93.0	34.021	208-230/460	30
		1800	324/6JP	05018EP3H326JP-W22	5,611	P1	542	1.25	46.5	93.0	34.021	575	30
		1800	324/6JP	05018ET3E326JP-W22	6,624	P1	476	1.25	59.2	94.5	34.021	208-230/460	
		1200	364/5JP	05012ET3E365JP-W22	10,748	P1	983	1.25	57.4	94.1	35.916	208-230/460	
60	45	3600	324/6JP	06036EP3E326JP-W22	7,954	P1	618	1.15	69.0	93.0	34.021	208-230/460	30
		3600	364/5JP	06036EP3E364JP-W22	8,412	P1	921	1.25	67.5	93.0	35.916	208-230/460	30
		3600	364/5JP	06036ET3E364JP-W22	10,252	P1	946	1.25	67.0	93.6	35.916	208-230/460	
		1800	324/6JP	06018EP3E326JP-W22	7,176	P1	643	1.15	71.0	93.6	34.021	208-230/460	30
		1800	364/5JP	06018EP3E364JP-W22	7,960	P1	937	1.25	69.4	93.6	35.916	208-230/460	30
		1800	364/5JP	06018ET3E364JP-W22	9,619	P1	1042	1.25	68.3	95.0	35.916	208-230/460	
		1200	404/5JP	06012ET3E404JP-W22	12,444	P1	1156	1.25	69.5	94.5	38.911	208-230/460	
75	55	3600	364/5JP	07536EP3E365JP-W22	10,045	P1	999	1.25	82.5	93.0	35.916	208-230/460	30
		3600	364/5JP	07536EP3G365JP-W22	10,045	P1	961	1.25	82.5	93.0	35.916	460	30
		3600	364/5JP	07536ET3E365JP-W22	11,321	P1	997	1.25	81.9	93.6	35.916	208-230/460	
		1800	364/5JP	07518EP3E365JP-W22	9,038	P1	995	1.25	84.3	94.1	35.916	208-230/460	30
		1800	364/5JP	07518ET3E365JP-W22	10,235	P1	1044	1.25	84.1	95.4	35.916	208-230/460	
		1200	404/5JP	07512ET3E405JP-W22	14,005	P1	1209	1.25	84.9	94.5	38.911	208-230/460	
100	75	3600	404/5JP	10036EP3E405JP-W22	11,449	P1	1128	1.25	112	93.6	38.911	208-230/460	30
		3600	404/5JP	10036EP3G405JP-W22	11,449	P1	1128	1.25	112	93.6	38.911	460	30
		3600	404/5JP	10036ET3E405JP-W22	13,949	P1	1226	1.25	110	94.1	38.911	208-230/460	
		3600	404/5JP	10036ET3G405JP-W22	13,949	P1	1222	1.25	110	94.1	38.911	460	
		1800	404/5JP	10018EP3E405JP-W22	10,269	P1	1227	1.25	112	94.5	38.911	208-230/460	30
		1800	404/5JP	10018EP3G405JP-W22	10,269	P1	1214	1.25	112	94.5	38.911	460	30
		1800	404/5JP	10018ET3E405JP-W22	12,411	P1	1305	1.25	111	95.4	38.911	208-230/460	
		1800	404/5JP	10018ET3G405JP-W22	12,411	P1	1294	1.25	111	95.4	38.911	460	

Note: Flanged motors on Cast Iron frame sizes 143/5 to 254/6 have non-NEMA BA dimension. Refer to mechanical section of this catalog for details.

CLOSE-COUPLED PUMP ODP MOTORS



JM – ODP – Three-Phase

HP	kW	RPM	NEMA Frame	Catalog Number	List Price	Mult. Symbol	Approx. Shipping Weight (lbs)	Service Factor	FL Amps @ High	FL. Eff (%)	"C" Dimension (in)	Voltage (V)	Notes
1	0.75	1800	E143/5JM	00118OP3E143JM	437	P1C	50	1.15	1.50	82.5	14.055	208-230/460	9;30
		1800	143/5JM	00118OP3E143JM-S	437	P1C	35	1.15	1.63	82.5	13.701	208-230/460	9;30
		1800	E143/5JM	00118OP3H143JM	437	P1C	49	1.15	1.20	82.5	14.055	575	9;30
		1800	143/5JM	00118OP3H143JM-S	437	P1C	35	1.15	1.30	82.5	13.701	575	9;30
		1800	E143/5JM	00118OT3E143JM	486	P1C	50	1.15	1.45	85.5	14.055	208-230/460	9
		1800	143/5JM	00118OT3E143JM-S	486	P1C	39	1.15	1.51	85.5	13.701	208-230/460	9
		1800	E143/5JM	00118OT3H143JM	486	P1C	50	1.15	1.16	85.5	14.055	575	9
		1800	143/5JM	00118OT3H143JM-S	486	P1C	39	1.15	1.21	85.5	13.701	575	9
		1200	E143/5JM	00112OT3E145JM	550	P1C	41	1.15	1.63	82.5	14.055	208-230/460	9
		1200	143/5JM	00112OT3E145JM-S	550	P1C	40	1.15	1.65	82.5	13.307	208-230/460	9
1.5	1.1	3600	E143/5JM	00156OP3E143JM	453	P1C	43	1.15	1.95	84.0	14.055	208-230/460	9;30
		3600	143/5JM	00156OP3E143JM-S	453	P1C	34	1.15	1.88	82.5	13.701	208-230/460	9;30
		3600	E143/5JM	00156OT3E143JM	534	P1C	43	1.15	1.90	85.5	14.055	208-230/460	9
		3600	143/5JM	00156OT3E143JM-S	534	P1C	34	1.15	1.85	84	13.701	208-230/460	9
		1800	E143/5JM	00158OP3E145JM	478	P1C	47	1.15	2.10	84.0	14.055	208-230/460	9;30
		1800	143/5JM	00158OP3E145JM-S	478	P1C	41	1.15	2.19	84	13.701	208-230/460	9;30
		1800	E143/5JM	00158OP3H145JM	478	P1C	46	1.15	1.68	84.0	14.055	575	9;30
		1800	143/5JM	00158OP3H145JM-S	478	P1C	41	1.15	1.75	84	13.701	575	9;30
		1800	E143/5JM	00158OT3E145JM	553	P1C	59	1.15	2.20	86.5	14.055	208-230/460	9
		1800	143/5JM	00158OT3E145JM-S	553	P1C	47	1.15	2.07	86.5	14.488	208-230/460	9
		1800	E143/5JM	00158OT3H145JM	553	P1C	58	1.15	1.76	86.5	14.055	575	9
		1800	143/5JM	00158OT3H145JM-S	553	P1C	47	1.15	1.66	86.5	14.488	575	9
		1200	182JM	00152OT3E182JM	769	P1C	48	1.15	2.31	86.5	14.527	208-230/460	9
		1200	182/4JM	00152OT3E182JM-S	769	P1C	63	1.15	2.25	86.5	15.453	208-230/460	9

Continued on next page

Note: Flanged motors on Cast Iron frame sizes 143/5 to 254/6 have non-NEMA BA dimension. Refer to mechanical section of this catalog for details.

Refer to electrical and mechanical data sections for additional technical information. Please refer to back cover for description of "NOTES"

For detailed specifications, data sheets, drawings and performance curves visit http://catalog.wegelectric.com

Data subject to change without notice.

CLOSE-COUPLED PUMP ODP MOTORS

JM – ODP – Three-Phase *continued*

HP	kW	RPM	NEMA Frame	Catalog Number	List Price	Mult. Symbol	Approx. Shipping Weight (lbs)	Service Factor	FL Amps @ High	FL. Eff (%)	"C" Dimension (in)	Voltage (V)	Notes
2	1.5	3600	E143/5JM	00236OP3E145JM	498	P1C	47	1.15	2.50	85.5	14.055	208-230/460	9;30
		3600	143/5JM	00236OP3E145JM-S	498	P1C	39	1.15	2.52	84	13.701	208-230/460	9;30
		3600	E143/5JM	00236OP3H145JM	498	P1C	47	1.15	2.00	85.5	14.055	575	9;30
		3600	143/5JM	00236OP3H145JM-S	498	P1C	39	1.15	2.01	84	13.701	575	9;30
		3600	E143/5JM	00236OT3E145JM	580	P1C	46	1.15	2.50	86.5	14.055	208-230/460	9
		3600	143/5JM	00236OT3E145JM-S	580	P1C	42	1.15	2.42	85.5	14.094	208-230/460	9
		3600	E143/5JM	00236OT3H145JM	580	P1C	46	1.15	2.00	86.5	14.055	575	9
		3600	143/5JM	00236OT3H145JM-S	580	P1C	42	1.15	1.94	85.5	14.094	575	9
		3600	E143/5JM	00236OT3V145JM	580	P1C	46	1.15	2.88	86.5	14.055	200/400	9
		3600	143/5JM	00236OT3V145JM-S	580	P1C	42	1.15	2.78	85.5	14.094	200/400	9
		1800	E143/5JM	00218OP3E145JM	524	P1C	59	1.15	2.90	84.0	14.055	208-230/460	9;30
		1800	143/5JM	00218OP3E145JM-S	524	P1C	44	1.15	2.91	84	14.094	208-230/460	9;30
		1800	E143/5JM	00218OP3H145JM	524	P1C	59	1.15	2.32	84.0	14.055	575	9;30
		1800	143/5JM	00218OP3H145JM-S	524	P1C	44	1.15	2.33	84	14.094	575	9;30
		1800	E143/5JM	00218OT3E145JM	607	P1C	59	1.15	2.90	86.5	14.055	208-230/460	9
		1800	143/5JM	00218OT3E145JM-S	607	P1C	44	1.15	2.69	86.5	14.488	208-230/460	9
		1800	E143/5JM	00218OT3H145JM	607	P1C	58	1.15	2.32	86.5	14.055	575	9
		1800	143/5JM	00218OT3H145JM-S	607	P1C	44	1.15	2.15	86.5	14.488	575	9
		1200	184JM	00212OT3E184JM	816	P1C	63	1.15	3.03	87.5	15.315	208-230/460	9
		1200	182/4JM	00212OT3E184JM-S	816	P1C	73	1.15	2.95	87.5	16.24	208-230/460	9

Continued on next page

Note: Flanged motors on Cast Iron frame sizes 143/5 to 254/6 have non-NEMA BA dimension. Refer to mechanical section of this catalog for details.

CLOSE-COUPLED PUMP ODP MOTORS

JM – ODP – Three-Phase *continued*

HP	kW	RPM	NEMA Frame	Catalog Number	List Price	Mult. Symbol	Approx. Shipping Weight (lbs)	Service Factor	FL Amps @ High	FL. Eff (%)	"C" Dimension (in)	Voltage (V)	Notes
3	2.2	3600	F143/5JM	003360P3E145JM	565	P1C	48	1.15	3.65	85.5	14.842	208-230/460	9;30
		3600	143/5JM	003360P3E145JM-S	565	P1C	42	1.15	3.69	84	14.094	208-230/460	9;30
		3600	F143/5JM	003360P3H145JM	565	P1C	48	1.15	2.92	85.5	14.842	575	9;30
		3600	143/5JM	003360P3H145JM-S	565	P1C	42	1.15	2.95	84	14.094	575	9;30
		3600	E143/5JM	003360T3E145JM	660	P1C	50	1.15	3.50	86.5	14.842	208-230/460	9
		3600	143/5JM	003360T3E145JM-S	660	P1C	45	1.15	3.59	85.5	14.488	208-230/460	9
		3600	E143/5JM	003360T3H145JM	660	P1C	50	1.15	2.80	86.5	14.842	575	9
		3600	143/5JM	003360T3H145JM-S	660	P1C	45	1.15	2.87	85.5	14.488	575	9
		3600	E143/5JM	003360T3V145JM	660	P1C	50	1.15	4.03	86.5	14.842	200/400	9
		3600	143/5JM	003360T3V145JM-S	660	P1C	45	1.15	4.13	85.5	14.488	200/400	9
		1800	182JM	003180P3E182JM	557	P1C	69	1.15	4.04	86.5	14.527	208-230/460	9;30
		1800	182/4JM	003180P3E182JM-S	557	P1C	61	1.15	4.04	86.5	15.453	208-230/460	9;30
		1800	182JM	003180P3H182JM	557	P1C	69	1.15	3.23	86.5	14.527	575	9;30
		1800	182/4JM	003180P3H182JM-S	557	P1C	61	1.15	3.23	86.5	15.453	575	9;30
		1800	182JM	003180T3E182JM	665	P1C	75	1.15	4.06	89.5	14.527	208-230/460	9
		1800	182/4JM	003180T3E182JM-S	665	P1C	73	1.15	3.86	89.5	16.634	208-230/460	9
		1800	182JM	003180T3H182JM	665	P1C	75	1.15	3.25	89.5	14.527	575	9
		1800	182/4JM	003180T3H182JM-S	665	P1C	73	1.15	3.09	89.5	16.634	575	9
		1800	182JM	003180T3V182JM	665	P1C	75	1.15	4.67	89.5	14.527	200/400	9
		1800	182/4JM	003180T3V182JM-S	665	P1C	73	1.15	4.43	89.5	16.634	200/400	9
		1200	213/5JM	003120T3E213JM	1,105	P1C	72	1.15	4.27	88.5	17.323	208-230/460	9
		1200	213/5JM	003120T3E213JM-S	1,105	P1C	110	1.15	4.16	88.5	17.717	208-230/460	9

Continued on next page

Note: Flanged motors on Cast Iron frame sizes 143/5 to 254/6 have non-NEMA BA dimension. Refer to mechanical section of this catalog for details.

JM – ODP – Three-Phase *continued*

HP	kW	RPM	NEMA Frame	Catalog Number	List Price	Mult. Symbol	Approx. Shipping Weight (lbs)	Service Factor	FL Amps @ High	FL. Eff (%)	"C" Dimension (in)	Voltage (V)	Notes
5	3.7	3600	182JM	00536OP3E182JM	669	P1C	71	1.15	6.17	86.5	14.527	208-230/460	9;30
		3600	182/4JM	00536OP3E182JM-S	669	P1C	60	1.15	6.24	85.5	15.453	208-230/460	9;30
		3600	182JM	00536OP3H182JM	669	P1C	73	1.15	4.94	86.5	14.527	575	9;30
		3600	182/4JM	00536OP3H182JM-S	669	P1C	60	1.15	4.99	85.5	15.453	575	9;30
		3600	182JM	00536OT3E182JM	780	P1C	74	1.15	6.17	88.5	14.527	208-230/460	9
		3600	182/4JM	00536OT3E182JM-S	780	P1C	66	1.15	6.10	86.5	16.26	208-230/460	9
		3600	182JM	00536OT3H182JM	780	P1C	74	1.15	4.94	88.5	14.527	575	9
		3600	182/4JM	00536OT3H182JM-S	780	P1C	66	1.15	4.88	86.5	16.26	575	9
		3600	182JM	00536OT3V182JM	780	P1C	74	1.15	7.10	88.5	14.527	200/400	9
		3600	182/4JM	00536OT3V182JM-S	780	P1C	66	1.15	7.02	86.5	16.26	200/400	9
		1800	184JM	00518OP3E184JM	740	P1C	81	1.15	6.55	87.5	15.315	208-230/460	9;30
		1800	182/4JM	00518OP3E184JM-S	740	P1C	73	1.15	6.47	87.5	16.634	208-230/460	9;30
		1800	184JM	00518OP3H184JM	740	P1C	81	1.15	5.24	87.5	15.315	575	9;30
		1800	182/4JM	00518OP3H184JM-S	740	P1C	73	1.15	5.18	87.5	16.634	575	9;30
		1800	184JM	00518OT3E184JM	849	P1C	85	1.15	6.41	89.5	15.315	208-230/460	9
		1800	182/4JM	00518OT3E184JM-S	849	P1C	87	1.15	6.33	89.5	17.815	208-230/460	9
		1800	184JM	00518OT3H184JM	849	P1C	85	1.15	5.13	89.5	15.315	575	9
		1800	182/4JM	00518OT3H184JM-S	849	P1C	87	1.15	5.06	89.5	17.815	575	9
		1200	213/5JM	00512OT3E215JM	1,319	P1C	126	1.15	6.92	89.5	17.323	208-230/460	9
		1200	213/5JM	00512OT3E215JM-S	1,319	P1C	129	1.15	6.74	89.5	18.11	208-230/460	9
7.5	5.5	3600	184JM	00736OP3E184JM	862	P1C	80	1.15	8.97	87.5	15.315	208-230/460	9;30
		3600	182/4JM	00736OP3E184JM-S	862	P1C	70	1.15	8.86	87.5	16.26	208-230/460	9;30
		3600	184JM	00736OP3H184JM	862	P1C	82	1.15	7.18	87.5	15.315	575	9;30
		3600	182/4JM	00736OP3H184JM-S	862	P1C	70	1.15	7.09	87.5	16.26	575	9;30
		3600	184JM	00736OT3E184JM	1,086	P1C	83	1.15	8.97	88.5	15.315	208-230/460	9
		3600	182/4JM	00736OT3E184JM-S	1,086	P1C	77	1.15	8.67	88.5	16.634	208-230/460	9
		3600	184JM	00736OT3H184JM	1,086	P1C	83	1.15	7.18	88.5	15.315	575	9
		3600	182/4JM	00736OT3H184JM-S	1,086	P1C	77	1.15	6.93	88.5	16.634	575	9
		1800	213/5JM	00718OP3E213JM	945	P1C	109	1.15	9.40	88.5	17.323	208-230/460	9;30
		1800	213/5JM	00718OP3E213JM-S	945	P1C	112	1.15	9.29	88.5	17.717	208-230/460	9;30
		1800	213/5JM	00718OP3H213JM	945	P1C	108	1.15	7.52	88.5	17.323	575	9;30
		1800	213/5JM	00718OP3H213JM-S	945	P1C	112	1.15	7.43	88.5	17.717	575	9;30
		1800	213/5JM	00718OT3E213JM	1,119	P1C	116	1.15	9.03	91.0	17.323	208-230/460	9
		1800	213/5JM	00718OT3E213JM-S	1,119	P1C	128	1.15	9.14	91	17.717	208-230/460	9
		1800	213/5JM	00718OT3H213JM	1,120	P1C	116	1.15	7.22	91.0	21.240	575	9
		1800	213/5JM	00718OT3H213JM-S	1,120	P1C	128	1.15	7.31	91	17.717	575	9
		1200	254JM	00712OT3E254JM	1,985	P1C	258	1.15	9.69	90.2	22.169	208-230/460	
		1200	254/6JM	00712OT3E254JM-S	1,985	P1C	231	1.15	10.2	90.2	21.969	208-230/460	9

Continued on next page

Note: Flanged motors on Cast Iron frame sizes 143/5 to 254/6 have non-NEMA BA dimension. Refer to mechanical section of this catalog for details.

CLOSE-COUPLED PUMP ODP MOTORS

JM – ODP – Three-Phase *continued*

HP	kW	RPM	NEMA Frame	Catalog Number	List Price	Mult. Symbol	Approx. Shipping Weight (lbs)	Service Factor	FL Amps @ High	FL. Eff (%)	"C" Dimension (in)	Voltage (V)	Notes
10	7.5	3600	213/5JM	010360P3E213JM	1,109	P1C	111	1.15	12.2	88.5	17.323	208-230/460	9;30
		3600	213/5JM	010360P3E213JM-S	1,109	P1C	115	1.15	12.2	88.5	17.717	208-230/460	9;30
		3600	213/5JM	010360P3H213JM	1,109	P1C	111	1.15	9.76	88.5	17.323	575	9;30
		3600	213/5JM	010360P3H213JM-S	1,109	P1C	115	1.15	9.80	88.5	17.717	575	9;30
		3600	213/5JM	010360T3E213JM	1,289	P1C	135	1.15	11.9	90.2	17.323	208-230/460	9
		3600	213/5JM	010360T3E213JM-S	1,289	P1C	128	1.15	12.0	89.5	18.11	208-230/460	9
		3600	213/5JM	010360T3H213JM	1,289	P1C	135	1.15	9.49	90.2	17.323	575	9
		3600	213/5JM	010360T3H213JM-S	1,289	P1C	128	1.15	9.60	89.5	18.11	575	9
		1800	213/5JM	010180P3E215JM	1,161	P1C	120	1.15	12.7	89.5	17.323	208-230/460	9;30
		1800	213/5JM	010180P3E215JM-S	1,161	P1C	128	1.15	12.4	89.5	17.717	208-230/460	9;30
		1800	213/5JM	010180P3H215JM	1,161	P1C	119	1.15	10.2	89.5	17.323	575	9;30
		1800	213/5JM	010180P3H215JM-S	1,161	P1C	128	1.15	9.90	89.5	17.717	575	9;30
		1800	213/5JM	010180T3E215JM	1,364	P1C	142	1.15	12.2	91.7	17.323	208-230/460	9
		1800	213/5JM	010180T3E215JM-S	1,364	P1C	149	1.15	12.4	91.7	18.898	208-230/460	9
		1800	213/5JM	010180T3H215JM	1,366	P1C	105	1.15	9.76	91.7	21.240	575	9
		1800	213/5JM	010180T3H215JM-S	1,366	P1C	149	1.15	9.90	91.7	18.898	575	9
		1200	256JM	010120T3E256JM	2,298	P1C	271	1.15	13.0	91.7	23.902	208-230/460	
		1200	254/6JM	010120T3E256JM-S	2,298	P1C	254	1.15	13.9	91.7	21.969	208-230/460	9
15	11	3600	213/5JM	015360P3E215JM	1,447	P1C	128	1.15	17.5	89.5	17.323	208-230/460	9;30
		3600	213/5JM	015360P3E215JM-S	1,447	P1C	128	1.15	17.5	89.5	18.11	208-230/460	9;30
		3600	213/5JM	015360P3H215JM	1,447	P1C	127	1.15	14.0	89.5	17.323	575	9;30
		3600	213/5JM	015360P3H215JM-S	1,447	P1C	128	1.15	14.0	89.5	18.11	575	9;30
		3600	213/5JM	015360T3E215JM	1,707	P1C	137	1.15	17.4	91.0	17.323	208-230/460	9
		3600	213/5JM	015360T3E215JM-S	1,707	P1C	143	1.15	17.2	90.2	18.898	208-230/460	9
		3600	213/5JM	015360T3H215JM	1,707	P1C	137	1.15	13.9	91.0	17.323	575	9
		3600	213/5JM	015360T3H215JM-S	1,707	P1C	143	1.15	13.8	90.2	18.898	575	9
		1800	254JM	015180P3E254JM	1,749	P1C	243	1.15	18.7	91.0	22.169	208-230/460	30
		1800	254/6JM	015180P3E254JM-S	1,749	P1C	197	1.15	18.5	91	21.969	208-230/460	9;30
		1800	254JM	015180P3H254JM	1,749	P1C	242	1.15	15.0	91.0	22.169	575	30
		1800	254/6JM	015180P3H254JM-S	1,749	P1C	197	1.15	14.8	91	21.969	575	9;30
		1800	254JM	015180T3E254JM	1,995	P1C	272	1.15	18.6	93.0	22.169	208-230/460	
		1800	254/6JM	015180T3E254JM-S	1,995	P1C	220	1.15	18.3	93	21.969	208-230/460	9
		1800	254JM	015180T3H254JM	1,995	P1C	272	1.15	14.9	93.0	22.169	575	
		1800	254/6JM	015180T3H254JM-S	1,995	P1C	220	1.15	14.7	93	21.969	575	9
		1200	284JM	015120T3E284JM	3,164	P1C	391	1.15	17.7	91.7	24.261	208-230/460	

Continued on next page

Note: Flanged motors on Cast Iron frame sizes 143/5 to 254/6 have non-NEMA BA dimension. Refer to mechanical section of this catalog for details.

JM – ODP – Three-Phase *continued*

HP	kW	RPM	NEMA Frame	Catalog Number	List Price	Mult. Symbol	Approx. Shipping Weight (lbs)	Service Factor	FL Amps @ High	FL. Eff (%)	"C" Dimension (in)	Voltage (V)	Notes
20	15	3600	254JM	020360P3E254JM	1,816	P1C	237	1.15	24.3	90.2	22.169	208-230/460	30
		3600	254/6JM	020360P3E254JM-S	1,816	P1C	196	1.15	23.7	90.2	21.969	208-230/460	9;30
		3600	254JM	020360P3H254JM	1,816	P1C	236	1.15	19.4	90.2	22.169	575	30
		3600	254/6JM	020360P3H254JM-S	1,816	P1C	196	1.15	19.0	90.2	21.969	575	9;30
		3600	254JM	020360T3E254JM	2,107	P1C	231	1.15	24.6	91.0	22.169	208-230/460	
		3600	254/6JM	020360T3E254JM-S	2,107	P1C	196	1.15	23.8	91	21.969	208-230/460	9
		3600	254JM	020360T3H254JM	2,107	P1C	231	1.15	19.7	91.0	22.169	575	
		3600	254/6JM	020360T3H254JM-S	2,107	P1C	196	1.15	19.0	91	21.969	575	9
		1800	256JM	020180P3E256JM	2,107	P1C	271	1.15	25.5	91.0	23.902	208-230/460	30
		1800	254/6JM	020180P3E256JM-S	2,107	P1C	211	1.15	24.9	91	21.969	208-230/460	9;30
		1800	256JM	020180P3H256JM	2,013	P1C	271	1.15	20.4	91.0	23.902	575	30
		1800	254/6JM	020180P3H256JM-S	2,013	P1C	211	1.15	19.9	91	21.969	575	9;30
		1800	256JM	020180T3E256JM	2,413	P1C	309	1.15	25.0	93.0	23.902	208-230/460	
		1800	254/6JM	020180T3E256JM-S	2,413	P1C	243	1.15	24.7	93	21.969	208-230/460	9
		1800	256JM	020180T3H256JM	2,413	P1C	309	1.15	20.0	93.0	23.902	575	
		1800	254/6JM	020180T3H256JM-S	2,413	P1C	243	1.15	19.7	93	21.969	575	9
		1200	286JM	020120T3E286JM	3,872	P1C	424	1.15	24.0	92.4	25.754	208-230/460	
25	18.5	3600	256JM	025360P3E256JM	2,242	P1C	262	1.15	29.3	91.0	23.902	208-230/460	30
		3600	254/6JM	025360P3E256JM-S	2,242	P1C	219	1.15	29.0	91	21.969	208-230/460	9;30
		3600	256JM	025360P3H256JM	2,242	P1C	261	1.15	23.4	91.0	23.902	575	30
		3600	254/6JM	025360P3H256JM-S	2,242	P1C	219	1.15	23.2	91	21.969	575	9;30
		3600	256JM	025360T3E256JM	2,598	P1C	271	1.15	29.8	91.7	23.902	208-230/460	
		3600	254/6JM	025360T3E256JM-S	2,598	P1C	219	1.15	29.1	91.7	21.969	208-230/460	9
		1800	284JM	025180P3E284JM	2,551	P1C	353	1.15	30.1	91.7	24.261	208-230/460	30
		1800	284JM	025180T3E284JM	2,912	P1C	389	1.15	29.9	93.6	24.261	208-230/460	
		1200	324JM	025120T3E324JM	4,306	P1C	569	1.15	30.4	93.0	26.431	208-230/460	
30	22	3600	284JM	030360P3E284JM	2,731	P1C	351	1.15	34.5	91.0	24.261	208-230/460	30
		3600	284JM	030360T3E284JM	3,185	P1C	364	1.15	35.2	92.4	24.261	208-230/460	
		1800	286JM	030180P3E286JM	2,946	P1C	391	1.15	35.6	92.4	25.754	208-230/460	30
		1800	286JM	030180T3E286JM	3,368	P1C	450	1.15	35.4	94.1	25.754	208-230/460	
		1200	326JM	030120T3E326JM	4,741	P1C	603	1.15	36.0	93.6	27.927	208-230/460	
40	30	3600	286JM	040360P3E286JM	3,260	P1C	387	1.15	46.1	91.7	25.754	208-230/460	30
		3600	286JM	040360T3E286JM	3,811	P1C	410	1.15	47.1	93.0	25.754	208-230/460	
		1800	324JM	040180P3E324JM	3,354	P1C	547	1.15	49.4	93.0	26.431	208-230/460	30
		1800	324JM	040180P3H324JM	3,354	P1C	545	1.15	39.5	93.0	26.431	575	30
		1800	324JM	040180T3E324JM	3,797	P1C	568	1.15	48.2	94.1	26.431	208-230/460	
		1200	364/5JM	040120T3E364JM	6,696	P1C	853	1.15	60.2	94.1	29.139	208-230/460	

Continued on next page

Note: Flanged motors on Cast Iron frame sizes 143/5 to 254/6 have non-NEMA BA dimension. Refer to mechanical section of this catalog for details.

CLOSE-COUPLED PUMP ODP MOTORS

JM – ODP – Three-Phase *continued*

HP	kW	RPM	NEMA Frame	Catalog Number	List Price	Mult. Symbol	Approx. Shipping Weight (lbs)	Service Factor	FL Amps @ High	FL. Eff (%)	"C" Dimension (in)	Voltage (V)	Notes
50	37	3600	324JM	050360P3E324JM	3,971	P1C	543	1.15	58.4	92.4	26.431	208-230/460	30
		3600	324JM	050360T3E324JM	4,607	P1C	572	1.15	59.1	93.6	26.431	208-230/460	
		3600	324JM	050360T3G324JM	4,607	P1C	571	1.15	59.1	93.6	26.431	460	
		1800	326JM	050180P3E326JM	4,104	P1C	530	1.15	60.2	93.0	27.927	208-230/460	30
		1800	326JM	050180T3E326JM	4,877	P1C	598	1.15	61.4	94.5	27.927	208-230/460	
		1200	364/5JM	050120T3E365JM	7,666	P1C	976	1.15	60.2	94.1	29.139	208-230/460	
60	45	3600	326JM	060360P3E326JM	4,859	P1C	550	1.15	70.6	93.0	27.927	208-230/460	30
		3600	326JM	060360P3G326JM	4,859	P1C	544	1.15	70.6	93.0	27.927	460	30
		3600	326JM	060360T3E326JM	5,432	P1C	569	1.15	71.0	93.6	27.927	208-230/460	
		1800	364/5JM	060180P3G364JM	5,254	P1C	809	1.15	70.2	93.6	29.139	460	30
		1800	364/5JM	060180T3E364JM	5,994	P1C	964	1.15	69.9	95.0	29.139	208-230/460	
		1800	364/5JM	060180T3G364JM	5,994	P1C	962	1.15	69.9	95.0	29.139	460	
75	55	3600	364/5JM	075360P3E364JM	6,226	P1C	856	1.15	84.3	93.0	29.139	208-230/460	30
		3600	364/5JM	075360P3G364JM	6,226	P1C	833	1.15	84.3	93.0	29.139	460	30
		3600	364/5JM	075360T3E364JM	6,951	P1C	860	1.15	81.5	94.1	29.139	208-230/460	
		3600	364/5JM	075360T3G364JM	6,951	P1C	847	1.15	81.5	94.1	29.139	460	
		1800	364/5JM	075180P3G365JM	5,989	P1C	891	1.15	85.3	94.1	29.139	460	30
		1800	364/5JM	075180T3E365JM	6,932	P1C	965	1.15	85.5	95.0	29.139	208-230/460	
		1800	364/5JM	075180T3G365JM	6,932	P1C	962	1.15	85.5	95.0	29.139	460	
100	75	3600	364/5JM	100360P3E365JM	7,005	P1C	935	1.15	114	93.0	29.139	208-230/460	30
		3600	364/5JM	100360P3G365JM	7,005	P1C	935	1.15	114	93.0	29.139	460	30
		3600	364/5JM	100360T3E365JM	8,683	P1C	911	1.15	111	94.5	29.139	208-230/460	
		3600	364/5JM	100360T3G365JM	8,683	P1C	906	1.15	111	94.5	29.139	460	

Note: Flanged motors on Cast Iron frame sizes 143/5 to 254/6 have non-NEMA BA dimension. Refer to mechanical section of this catalog for details.





CLOSE-COUPLED PUMP ODP MOTORS

JM – ODP – Three-Phase – Footless Vertical

HP	kW	RPM	NEMA Frame	Catalog Number	List Price	Mult. Symbol	Approx. Shipping Weight (lbs)	Service Factor	FL Amps @ High	FL. Eff (%)	"C" Dimension (in)	Voltage (V)	Notes
1	0.75	1800	E143/5JM	00118OP3E143JMV	513	P1C	51	1.15	1.50	82.5	15.354	208-230/460	9;15;30
		1800	143/5JM	00118OP3E143JMV-S	513	P1C	35	1.15	1.63	82.5	15.000	208-230/460	9;15;30
1.5	1.1	3600	E143/5JM	00156OP3E143JMV	542	P1C	44	1.15	1.95	84.0	15.354	208-230/460	9;15;30
		3600	143/5JM	00156OP3E143JMV-S	542	P1C	34	1.15	1.88	82.5	15.000	208-230/460	9;15;30
		1800	E143/5JM	00158OP3E145JMV	554	P1C	48	1.15	2.10	84.0	15.354	208-230/460	9;15;30
		1800	E143/5JM	00158OP3E145JMV-S	554	P1C	48	1.15	2.10	84.0	15.354	208-230/460	9;15;30
2	1.5	3600	E143/5JM	00236OP3E145JMV	573	P1C	48	1.15	2.50	85.5	15.354	208-230/460	9;15;30
		3600	143/5JM	00236OP3E145JMV-S	573	P1C	39	1.15	2.52	84	15.000	208-230/460	9;15;30
		1800	E143/5JM	00218OP3E145JMV	603	P1C	60	1.15	2.90	84.0	15.354	208-230/460	9;15;30
		1800	143/5JM	00218OP3E145JMV-S	603	P1C	44	1.15	2.91	84	15.393	208-230/460	9;15;30
3	2.2	3600	F143/5JM	00336OP3E145JMV	657	P1C	47	1.15	3.65	85.5	16.141	208-230/460	9;15;30
		3600	143/5JM	00336OP3E145JMV-S	657	P1C	42	1.15	3.69	84	15.393	208-230/460	9;15;30
		1800	182JM	00318OP3E182JMV	687	P1C	70	1.15	4.04	86.5	15.826	208-230/460	9;15;30
		1800	182/4JM	00318OP3E182JMV-S	687	P1C	61	1.15	4.04	86.5	16.752	208-230/460	9;15;30
5	3.7	3600	182JM	00536OP3E182JMV	797	P1C	72	1.15	6.17	86.5	15.826	208-230/460	9;15;30
		3600	182/4JM	00536OP3E182JMV-S	797	P1C	60	1.15	6.24	85.5	16.752	208-230/460	9;15;30
		1800	184JM	00518OP3E184JMV	875	P1C	83	1.15	6.55	87.5	16.614	208-230/460	9;15;30
		1800	182/4JM	00518OP3E184JMV-S	875	P1C	73	1.15	6.47	87.5	17.933	208-230/460	9;15;30
7.5	5.5	3600	184JM	00736OP3E184JMV	993	P1C	82	1.15	8.97	87.5	16.614	208-230/460	9;15;30
		3600	182/4JM	00736OP3E184JMV-S	993	P1C	70	1.15	8.86	87.5	17.559	208-230/460	9;15;30
		1800	213/5JM	00718OP3E213JMV	1,106	P1C	120	1.15	9.40	88.5	18.583	208-230/460	9;15;30
		1800	213/5JM	00718OP3E213JMV-S	1,106	P1C	112	1.15	9.29	88.5	18.977	208-230/460	9;15;30
10	7.5	3600	213/5JM	01036OP3E213JMV	1,201	P1C	122	1.15	12.2	88.5	18.583	208-230/460	9;15;30
		3600	213/5JM	01036OP3E213JMV-S	1,201	P1C	115	1.15	12.2	88.5	18.977	208-230/460	9;15;30
		1800	213/5JM	01018OP3E215JMV	1,323	P1C	131	1.15	12.7	89.5	18.583	208-230/460	9;15;30
		1800	213/5JM	01018OP3E215JMV-S	1,323	P1C	128	1.15	12.4	89.5	18.977	208-230/460	9;15;30
		1800	213/5JM	01018OP3H215JMV	1,323	P1C	130	1.15	10.2	89.5	18.583	575	9;15;30
		1800	213/5JM	01018OP3H215JMV-S	1,323	P1C	128	1.15	9.90	89.5	18.977	575	9;15;30
15	11	3600	213/5JM	01536OP3E215JMV	1,617	P1C	139	1.15	17.5	89.5	18.583	208-230/460	9;15;30
		3600	213/5JM	01536OP3H215JMV	1,617	P1C	139	1.15	14.0	89.5	18.583	575	9;15;30
		3600	213/5JM	01536OP3E215JMV-S	1,617	P1C	128	1.15	17.5	89.5	19.370	208-230/460	9;15;30
20	15	3600	254JM	02036OP3E254JMV	2,092	P1C	231	1.15	24.3	90.2	24.098	208-230/460	15;30
		3600	254/6JM	02036OP3E254JMV-S	2,092	P1C	196	1.15	23.7	90.2	23.347	208-230/460	9;15;30
		3600	254JM	02036OP3H254JMV	2,092	P1C	231	1.15	19.4	90.2	24.098	575	15;30
		3600	254/6JM	02036OP3H254JMV-S	2,092	P1C	196	1.15	19.0	90.2	23.347	575	9;15;30

Continued on next page

Refer to electrical and mechanical data sections for additional technical information. Please refer to back cover for description of "NOTES"

For detailed specifications, data sheets, drawings and performance curves visit http://catalog.wegelectric.com

Data subject to change without notice.

CLOSE-COUPLED PUMP ODP MOTORS

JM – ODP – Three-Phase – Footless Vertical *continued*

HP	kW	RPM	NEMA Frame	Catalog Number	List Price	Mult. Symbol	Approx. Shipping Weight (lbs)	Service Factor	FL Amps @ High	FL. Eff (%)	"C" Dimension (in)	Voltage (V)	Notes
25	18.5	3600	256JM	025360P3H256JMV	2,352	P1C	257	1.15	23.4	91.0	25.831	575	15;30
		3600	254/6JM	025360P3H256JMV-S	2,352	P1C	219	1.15	23.2	91	23.347	575	9;15;30
30	22	3600	284JM	030360P3H284JMV	3,181	P1C	341	1.15	27.6	91.0	26.584	575	15;30
		1800	286JM	030180P3H286JMV	3,403	P1C	389	1.15	28.5	92.4	28.077	575	15;30
40	30	3600	286JM	040360P3E286JMV	3,611	P1C	384	1.15	46.1	91.7	28.077	208-230/460	15;30
		3600	286JM	040360P3H286JMV	3,611	P1C	385	1.15	36.9	91.7	28.077	575	15;30
50	37	3600	324JM	050360P3E324JMV	4,394	P1C	512	1.15	58.4	92.4	29.147	208-230/460	15;30
		3600	324JM	050360P3H324JMV	4,394	P1C	511	1.15	46.7	92.4	29.147	575	15;30
		1800	326JM	050180P3H326JMV	4,527	P1C	537	1.15	48.2	93.0	30.643	575	15;30
60	45	3600	326JM	060360P3H326JMV	5,305	P1C	556	1.15	56.5	93.0	30.643	575	15;30
75	55	3600	364/5JM	075360P3H364JMV	6,604	P1C	556	1.15	67.4	93.0	29.139	575	15;30

Refer to electrical and mechanical data sections for additional technical information. Please refer to back cover for description of "NOTES"

For detailed specifications, data sheets, drawings and performance curves visit http://catalog.wegelectric.com

Data subject to change without notice.



CLOSE-COUPLED PUMP ODP MOTORS

JP – ODP – Three-Phase

HP	kW	RPM	NEMA Frame	Catalog Number	List Price	Mult. Symbol	Approx. Shipping Weight (lbs)	Service Factor	FL Amps @ High	FL. Eff (%)	"C" Dimension (in)	Voltage (V)	Notes
1	0.75	1800	E143/5JP	00118OP3E143JP	437	P1C	52	1.15	1.50	82.5	17.126	208-230/460	9;30
		1800	143/5JP	00118OP3E143JP-S	437	P1C	35	1.15	1.63	82.5	16.772	208-230/460	9;30
		1800	E143/5JP	00118OT3E143JP	486	P1C	52	1.15	1.45	85.5	17.126	208-230/460	9
		1800	143/5JP	00118OT3E143JP-S	486	P1C	39	1.15	1.51	85.5	16.772	208-230/460	9
		1200	E143/5JP	00112OT3E145JP	550	P1C	40	1.15	1.63	82.5	17.126	208-230/460	9
		1200	143/5JP	00112OT3E145JP-S	550	P1C	40	1.15	1.65	82.5	16.378	208-230/460	9
1.5	1.1	3600	E143/5JP	00156OP3E143JP	453	P1C	45	1.15	1.95	84.0	17.126	208-230/460	9;30
		3600	143/5JP	00156OP3E143JP-S	453	P1C	34	1.15	1.88	82.5	16.772	208-230/460	9;30
		3600	E143/5JP	00156OP3V143JP	453	P1C	43	1.15	2.24	84.0	17.126	200/400	9;30
		3600	143/5JP	00156OP3V143JP-S	453	P1C	34	1.15	2.16	82.5	16.772	200/400	9;30
		3600	E143/5JP	00156OT3E143JP	534	P1C	45	1.15	1.90	85.5	17.126	208-230/460	9
		3600	143/5JP	00156OT3E143JP-S	534	P1C	34	1.15	1.85	84	16.772	208-230/460	9
		1800	E143/5JP	00158OP3E145JP	478	P1C	49	1.15	2.10	84.0	17.126	208-230/460	9;30
		1800	143/5JP	00158OP3E145JP-S	478	P1C	41	1.15	2.19	84	16.772	208-230/460	9;30
		1800	E143/5JP	00158OT3E145JP	553	P1C	60	1.15	2.20	86.5	17.126	208-230/460	9
		1800	143/5JP	00158OT3E145JP-S	553	P1C	47	1.15	2.07	86.5	17.559	208-230/460	9
		1200	182JP	00152OT3E182JP	729	P1C	48	1.15	2.31	86.5	20.236	208-230/460	9
		1200	182/4JP	00152OT3E182JP-S	729	P1C	63	1.15	2.25	86.5	18.524	208-230/460	9
2	1.5	3600	E143/5JP	00236OP3E145JP	498	P1C	49	1.15	2.50	85.5	17.126	208-230/460	9;30
		3600	143/5JP	00236OP3E145JP-S	498	P1C	39	1.15	2.52	84	16.772	208-230/460	9;30
		3600	E143/5JP	00236OP3V145JP	498	P1C	42	1.15	2.88	85.5	17.126	200/400	9;30
		3600	143/5JP	00236OP3V145JP-S	498	P1C	39	1.15	2.90	84	16.772	200/400	9;30
		3600	E143/5JP	00236OT3E145JP	580	P1C	48	1.15	2.50	86.5	17.126	208-230/460	9
		3600	143/5JP	00236OT3E145JP-S	580	P1C	42	1.15	2.42	85.5	17.165	208-230/460	9
		1800	E143/5JP	00218OP3E145JP	524	P1C	61	1.15	2.90	84.0	17.126	208-230/460	9;30
		1800	143/5JP	00218OP3E145JP-S	524	P1C	44	1.15	2.91	84	17.165	208-230/460	9;30
		1800	E143/5JP	00218OT3E145JP	607	P1C	60	1.15	2.90	86.5	17.126	208-230/460	9
		1800	143/5JP	00218OT3E145JP-S	607	P1C	44	1.15	2.69	86.5	17.559	208-230/460	9
		1200	184JP	00212OT3E184JP	863	P1C	63	1.15	3.03	87.5	21.023	208-230/460	9
		1200	182/4JP	00212OT3E184JP-S	863	P1C	73	1.15	2.95	87.5	19.311	208-230/460	9

Continued on next page

Note: Flanged motors on Cast Iron frame sizes 143/5 to 254/6 have non-NEMA BA dimension. Refer to mechanical section of this catalog for details.

CLOSE-COUPLED PUMP ODP MOTORS

JP – ODP – Three-Phase *continued*

HP	kW	RPM	NEMA Frame	Catalog Number	List Price	Mult. Symbol	Approx. Shipping Weight (lbs)	Service Factor	FL Amps @ High	FL. Eff (%)	"C" Dimension (in)	Voltage (V)	Notes
3	2.2	3600	F143/5JP	00336OP3E145JP	565	P1C	50	1.15	3.65	85.5	17.913	208-230/460	9;30
		3600	143/5JP	00336OP3E145JP-S	565	P1C	42	1.15	3.69	84	17.165	208-230/460	9;30
		3600	F143/5JP	00336OP3V145JP	565	P1C	53	1.15	4.20	85.5	17.913	200/400	9;30
		3600	143/5JP	00336OP3V145JP-S	565	P1C	42	1.15	4.25	84	17.165	200/400	9;30
		3600	F143/5JP	00336OT3E145JP	660	P1C	54	1.15	3.50	86.5	17.913	208-230/460	9
		3600	143/5JP	00336OT3E145JP-S	660	P1C	45	1.15	3.59	85.5	17.559	208-230/460	9
		1800	182JP	00318OP3E182JP	557	P1C	77	1.15	4.04	86.5	20.236	208-230/460	9;30
		1800	182/4JP	00318OP3E182JP-S	557	P1C	61	1.15	4.04	86.5	18.524	208-230/460	9;30
		1800	182JP	00318OT3E182JP	665	P1C	80	1.15	4.06	89.5	20.236	208-230/460	9
		1800	182/4JP	00318OT3E182JP-S	665	P1C	73	1.15	3.86	89.5	19.705	208-230/460	9
		1200	213/5JP	00312OT3E213JP	1,095	P1C	72	1.15	4.27	88.5	21.240	208-230/460	9
		1200	213/5JP	00312OT3E213JP-S	1,095	P1C	110	1.15	4.16	88.5	21.575	208-230/460	9
5	3.7	3600	182JP	00536OP3E182JP	669	P1C	79	1.15	6.17	86.5	20.236	208-230/460	9;30
		3600	182/4JP	00536OP3E182JP-S	669	P1C	60	1.15	6.24	85.5	18.524	208-230/460	9;30
		3600	182JP	00536OP3V182JP	669	P1C	78	1.15	7.10	86.5	20.236	200/400	9;30
		3600	182/4JP	00536OP3V182JP-S	669	P1C	60	1.15	7.18	85.5	18.524	200/400	9;30
		3600	182JP	00536OT3E182JP	792	P1C	80	1.15	6.17	88.5	20.236	208-230/460	9
		3600	182/4JP	00536OT3E182JP-S	792	P1C	66	1.15	6.10	86.5	19.331	208-230/460	9
		1800	184JP	00518OP3E184JP	739	P1C	89	1.15	6.55	87.5	21.023	208-230/460	9;30
		1800	182/4JP	00518OP3E184JP-S	739	P1C	73	1.15	6.47	87.5	19.705	208-230/460	9;30
		1800	184JP	00518OT3E184JP	848	P1C	93	1.15	6.41	89.5	21.023	208-230/460	9
		1800	182/4JP	00518OT3E184JP-S	848	P1C	87	1.15	6.33	89.5	20.886	208-230/460	9
		1200	213/5JP	00512OT3E215JP	1,321	P1C	101	1.15	6.92	89.5	21.240	208-230/460	9
		1200	213/5JP	00512OT3E215JP-S	1,321	P1C	129	1.15	6.74	89.5	21.969	208-230/460	9
7.5	5.5	3600	184JP	00736OP3E184JP	862	P1C	88	1.15	8.97	87.5	21.023	208-230/460	9;30
		3600	182/4JP	00736OP3E184JP-S	862	P1C	70	1.15	8.86	87.5	19.331	208-230/460	9;30
		3600	184JP	00736OP3V184JP	862	P1C	87	1.15	10.3	87.5	21.023	200/400	9;30
		3600	182/4JP	00736OP3V184JP-S	862	P1C	70	1.15	10.2	87.5	19.331	200/400	9;30
		3600	184JP	00736OT3E184JP	1,086	P1C	88	1.15	8.97	88.5	21.023	208-230/460	9
		3600	182/4JP	00736OT3E184JP-S	1,086	P1C	77	1.15	8.67	88.5	19.705	208-230/460	9
		1800	213/5JP	00718OP3E213JP	946	P1C	123	1.15	9.40	88.5	21.240	208-230/460	9;30
		1800	213/5JP	00718OP3E213JP-S	946	P1C	112	1.15	9.29	88.5	21.575	208-230/460	9;30
		1800	213/5JP	00718OP3H213JP	946	P1C	122	1.15	7.52	88.5	21.240	575	9;30
		1800	213/5JP	00718OP3H213JP-S	946	P1C	112	1.15	7.43	88.5	21.575	575	9;30
		1800	213/5JP	00718OT3E213JP	1,120	P1C	130	1.15	9.03	91.0	21.240	208-230/460	9
		1800	213/5JP	00718OT3E213JP-S	1,120	P1C	128	1.15	9.14	91	21.575	208-230/460	9
		1800	213/5JP	00718OT3H213JP	1,120	P1C	129	1.15	7.22	91.0	21.240	575	9
		1800	213/5JP	00718OT3H213JP-S	1,120	P1C	128	1.15	7.31	91	21.575	575	9
		1800	213/5JP	00718OT3V213JP	1,120	P1C	130	1.15	10.4	91.0	21.240	200/400	9
		1800	213/5JP	00718OT3V213JP-S	1,120	P1C	128	1.15	10.5	91	21.575	200/400	9
		1200	254JP	00712OT3E254JP	2,113	P1C	252	1.15	9.69	90.2	25.049	208-230/460	
		1200	254/6JP	00712OT3E254JP-S	2,113	P1C	231	1.15	10.2	90.2	24.843	208-230/460	9

Continued on next page

Note: Flanged motors on Cast Iron frame sizes 143/5 to 254/6 have non-NEMA BA dimension. Refer to mechanical section of this catalog for details.

Refer to electrical and mechanical data sections for additional technical information. Please refer to back cover for description of "NOTES"

For detailed specifications, data sheets, drawings and performance curves visit http://catalog.wegelectric.com

Data subject to change without notice.

CLOSE-COUPLED PUMP ODP MOTORS

JP – ODP – Three-Phase *continued*

HP	kW	RPM	NEMA Frame	Catalog Number	List Price	Mult. Symbol	Approx. Shipping Weight (lbs)	Service Factor	FL Amps @ High	FL. Eff (%)	"C" Dimension (in)	Voltage (V)	Notes
10	7.5	3600	213/5JP	010360P3E213JP	1,109	P1C	124	1.15	12.2	89.5	21.240	208-230/460	9;30
		3600	213/5JP	010360P3E213JP-S	1,109	P1C	115	1.15	12.2	88.5	21.575	208-230/460	9;30
		3600	213/5JP	010360P3H213JP	1,109	P1C	125	1.15	9.76	88.5	21.240	575	9;30
		3600	213/5JP	010360P3H213JP-S	1,109	P1C	115	1.15	9.80	88.5	21.575	575	9;30
		3600	213/5JP	010360P3V213JP	1,109	P1C	100	1.15	14.0	88.5	21.240	200/400	9;30
		3600	213/5JP	010360P3V213JP-S	1,109	P1C	115	1.15	14.1	88.5	21.575	200/400	9;30
		3600	213/5JP	010360T3E213JP	1,289	P1C	149	1.15	11.9	90.2	21.240	208-230/460	9
		3600	213/5JP	010360T3E213JP-S	1,289	P1C	128	1.15	12.0	89.5	21.969	208-230/460	9
		3600	213/5JP	010360T3H213JP	1,289	P1C	149	1.15	9.49	90.2	21.240	575	9
		3600	213/5JP	010360T3H213JP-S	1,289	P1C	128	1.15	9.60	89.5	21.969	575	9
		1800	213/5JP	010180P3E215JP	1,163	P1C	134	1.15	12.7	89.5	21.240	208-230/460	9;30
		1800	213/5JP	010180P3E215JP-S	1,163	P1C	128	1.15	12.4	89.5	21.575	208-230/460	9;30
		1800	213/5JP	010180P3H215JP	1,163	P1C	133	1.15	10.2	89.5	21.240	575	9;30
		1800	213/5JP	010180P3H215JP-S	1,163	P1C	128	1.15	9.90	89.5	21.575	575	9;30
		1800	213/5JP	010180T3E215JP	1,366	P1C	146	1.15	12.2	91.7	21.240	208-230/460	9
		1800	213/5JP	010180T3E215JP-S	1,366	P1C	149	1.15	12.4	91.7	22.756	208-230/460	9
		1800	213/5JP	010180T3H215JP	1,366	P1C	155	1.15	9.76	91.7	21.240	575	9
		1800	213/5JP	010180T3H215JP-S	1,366	P1C	149	1.15	9.90	91.7	22.756	575	9
		1800	213/5JP	010180T3V215JP	1,366	P1C	146	1.15	14.0	91.7	21.240	200/400	9
		1800	213/5JP	010180T3V215JP-S	1,366	P1C	149	1.15	14.2	91.7	22.756	200/400	9
		1200	256JP	010120T3E256JP	2,298	P1C	271	1.15	13.0	91.7	26.782	208-230/460	
		1200	254/6JP	010120T3E256JP-S	2,298	P1C	254	1.15	13.9	91.7	24.843	208-230/460	9
15	11	3600	213/5JP	015360P3E215JP	1,447	P1C	140	1.15	17.5	89.5	21.240	208-230/460	9;30
		3600	213/5JP	015360P3E215JP-S	1,447	P1C	128	1.15	17.5	89.5	21.969	208-230/460	9;30
		3600	213/5JP	015360P3H215JP	1,447	P1C	139	1.15	14.0	89.5	21.240	575	9;30
		3600	213/5JP	015360P3H215JP-S	1,447	P1C	128	1.15	14.0	89.5	21.969	575	9;30
		3600	213/5JP	015360P3V215JP	1,447	P1C	117	1.15	20.1	89.5	21.240	200/400	9;30
		3600	213/5JP	015360P3V215JP-S	1,447	P1C	128	1.15	20.2	89.5	21.969	200/400	9;30
		3600	213/5JP	015360T3E215JP	1,707	P1C	151	1.15	17.4	91.0	21.240	208-230/460	9
		3600	213/5JP	015360T3E215JP-S	1,707	P1C	143	1.15	17.2	90.2	22.756	208-230/460	9
		3600	213/5JP	015360T3H215JP	1,707	P1C	150	1.15	13.9	91.0	21.240	575	9
		3600	213/5JP	015360T3H215JP-S	1,707	P1C	143	1.15	13.8	90.2	22.756	575	9
		1800	254JP	015180P3E254JP	1,749	P1C	239	1.15	18.7	91.0	25.049	208-230/460	30
		1800	254/6JP	015180P3E254JP-S	1,749	P1C	197	1.15	18.5	91	24.843	208-230/460	9;30
		1800	254JP	015180P3H254JP	1,749	P1C	239	1.15	15.0	91.0	25.049	575	30
		1800	254/6JP	015180P3H254JP-S	1,749	P1C	197	1.15	14.8	91	24.843	575	9;30
		1800	254JP	015180T3E254JP	1,995	P1C	269	1.15	18.6	93.0	25.049	208-230/460	
		1800	254/6JP	015180T3E254JP-S	1,995	P1C	220	1.15	18.3	93	24.843	208-230/460	9
		1200	284JP	015120T3E284JP	3,163	P1C	391	1.15	17.7	91.7	27.141	208-230/460	

Continued on next page

Note: Flanged motors on Cast Iron frame sizes 143/5 to 254/6 have non-NEMA BA dimension. Refer to mechanical section of this catalog for details.

Refer to electrical and mechanical data sections for additional technical information. Please refer to back cover for description of "NOTES"

For detailed specifications, data sheets, drawings and performance curves visit http://catalog.wegelectric.com

CLOSE-COUPLED PUMP ODP MOTORS

JP – ODP – Three-Phase *continued*

HP	kW	RPM	NEMA Frame	Catalog Number	List Price	Mult. Symbol	Approx. Shipping Weight (lbs)	Service Factor	FL Amps @ High	FL. Eff (%)	"C" Dimension (in)	Voltage (V)	Notes
20	15	3600	254JP	020360P3E254JP	1,815	P1C	233	1.15	24.3	90.2	25.049	208-230/460	30
		3600	254/6JP	020360P3E254JP-S	1,815	P1C	196	1.15	23.7	90.2	24.843	208-230/460	9;30
		3600	254JP	020360P3H254JP	1,815	P1C	233	1.15	19.4	90.2	25.049	575	30
		3600	254/6JP	020360P3H254JP-S	1,815	P1C	196	1.15	19.0	90.2	24.843	575	9;30
		3600	254JP	020360P3V254JP	1,815	P1C	232	1.15	27.9	90.2	25.049	200/400	30
		3600	254/6JP	020360P3V254JP-S	1,815	P1C	196	1.15	27.3	90.2	24.843	200/400	9;30
		3600	254JP	020360T3E254JP	2,106	P1C	227	1.15	24.6	91.0	25.049	208-230/460	
		3600	254/6JP	020360T3E254JP-S	2,106	P1C	196	1.15	23.8	91	24.843	208-230/460	9
		1800	256JP	020180P3E256JP	2,107	P1C	268	1.15	25.5	91.0	26.782	208-230/460	30
		1800	254/6JP	020180P3E256JP-S	2,107	P1C	211	1.15	24.9	91	24.843	208-230/460	9;30
		1800	256JP	020180P3H256JP	2,107	P1C	267	1.15	20.4	91.0	26.782	575	30
		1800	254/6JP	020180P3H256JP-S	2,107	P1C	211	1.15	19.9	91	24.843	575	9;30
		1800	256JP	020180T3E256JP	2,413	P1C	306	1.15	25.0	93.0	26.782	208-230/460	
		1800	254/6JP	020180T3E256JP-S	2,413	P1C	243	1.15	24.7	93	24.843	208-230/460	9
		1200	286JP	020120T3E286JP	3,871	P1C	424	1.15	24.0	92.4	28.634	208-230/460	
25	18.5	3600	256JP	025360P3E256JP	2,243	P1C	258	1.15	29.3	91.0	26.782	208-230/460	30
		3600	254/6JP	025360P3E256JP-S	2,243	P1C	219	1.15	29.0	91	24.843	208-230/460	9;30
		3600	256JP	025360P3H256JP	2,243	P1C	258	1.15	23.4	91.0	26.782	575	30
		3600	254/6JP	025360P3H256JP-S	2,243	P1C	219	1.15	23.2	91	24.843	575	9;30
		3600	256JP	025360P3V256JP	2,243	P1C	258	1.15	33.7	91.0	26.782	200/400	30
		3600	254/6JP	025360P3V256JP-S	2,243	P1C	219	1.15	33.3	91	24.843	200/400	9;30
		3600	256JP	025360T3E256JP	2,599	P1C	268	1.15	29.8	91.7	26.782	208-230/460	
		3600	254/6JP	025360T3E256JP-S	2,599	P1C	219	1.15	29.1	91.7	24.843	208-230/460	9
		1800	284JP	025180P3E284JP	2,550	P1C	353	1.15	30.1	91.7	27.141	208-230/460	30
		1800	284JP	025180T3E284JP	2,911	P1C	392	1.15	29.9	93.6	27.141	208-230/460	
		1800	284JP	025180T3H284JP	2,911	P1C	392	1.15	23.9	93.6	27.141	575	
		1200	324JP	025120T3E324JP	4,306	P1C	493	1.15	30.4	93.0	29.311	208-230/460	
30	22	3600	284JP	030360P3E284JP	2,731	P1C	351	1.15	34.5	91.0	27.141	208-230/460	30
		3600	284JP	030360P3H284JP	2,731	P1C	351	1.15	27.6	91.0	27.141	575	30
		3600	284JP	030360P3V284JP	2,731	P1C	352	1.15	39.7	91.0	27.141	200/400	30
		3600	284JP	030360T3E284JP	3,185	P1C	367	1.15	35.2	92.4	27.141	208-230/460	
		1800	286JP	030180P3E286JP	2,945	P1C	395	1.15	35.6	92.4	28.634	208-230/460	30
		1800	286JP	030180P3V286JP	2,945	P1C	391	1.15	39.5	92.4	28.700	200/400	30
		1800	286JP	030180T3E286JP	3,367	P1C	453	1.15	35.4	94.1	28.634	208-230/460	
		1200	326JP	030120T3E326JP	4,980	P1C	603	1.15	36.0	93.6	30.807	208-230/460	

Continued on next page

Note: Flanged motors on Cast Iron frame sizes 143/5 to 254/6 have non-NEMA BA dimension. Refer to mechanical section of this catalog for details.

CLOSE-COUPLED PUMP ODP MOTORS

JP – ODP – Three-Phase *continued*

HP	kW	RPM	NEMA Frame	Catalog Number	List Price	Mult. Symbol	Approx. Shipping Weight (lbs)	Service Factor	FL Amps @ High	FL. Eff (%)	"C" Dimension (in)	Voltage (V)	Notes
		3600	286JP	040360P3E286JP	3,260	P1C	389	1.15	46.1	91.7	28.634	208-230/460	30
		3600	286JP	040360P3H286JP	3,260	P1C	386	1.15	36.9	91.7	28.634	575	30
		3600	286JP	040360P3V286JP	3,260	P1C	444	1.15	53.0	91.7	28.634	200/400	30
		3600	286JP	040360T3E286JP	3,811	P1C	413	1.15	47.1	93.0	28.634	208-230/460	
40	30	1800	324JP	040180P3E324JP	3,354	P1C	549	1.15	49.4	93.0	29.311	208-230/460	30
		1800	324JP	040180P3H324JP	3,354	P1C	548	1.15	39.5	93.0	39.331	575	30
		1800	324JP	040180P3V324JP	3,354	P1C	480	1.15	56.8	93.0	29.311	200/400	30
		1800	324JP	040180T3E324JP	3,797	P1C	571	1.15	48.2	94.1	29.311	208-230/460	
		1200	364/5JP	040120T3E364JP	7,444	P1C	853	1.15	48.2	94.1	32.019	208-230/460	
		3600	324JP	050360P3E324JP	3,971	P1C	546	1.15	58.4	92.4	29.311	208-230/460	30
		3600	324JP	050360P3G324JP	3,971	P1C	545	1.15	58.4	92.4	29.311	460	30
		3600	324JP	050360P3H324JP	3,971	P1C	545	1.15	46.7	92.4	29.311	575	30
		3600	324JP	050360P3V324JP	3,971	P1C	543	1.15	67.2	92.4	29.311	200/400	30
50	37	3600	324JP	050360T3E324JP	4,607	P1C	574	1.15	59.1	93.6	29.311	208-230/460	
		3600	324JP	050360T3G324JP	4,607	P1C	573	1.15	59.1	93.6	29.311	460	
		1800	326JP	050180P3E326JP	4,105	P1C	533	1.15	60.2	93.0	30.807	208-230/460	30
		1800	326JP	050180T3E326JP	4,878	P1C	600	1.15	61.4	94.5	30.807	208-230/460	
		1200	364/5JP	050120T3E365JP	7,666	P1C	976	1.15	60.2	94.1	32.019	208-230/460	
		3600	326JP	060360P3E326JP	4,859	P1C	552	1.15	70.6	93.0	30.807	208-230/460	30
		3600	326JP	060360P3G326JP	4,859	P1C	551	1.15	70.6	93.0	30.807	460	30
		3600	326JP	060360P3H326JP	4,859	P1C	549	1.15	56.5	93.0	30.807	575	30
		3600	326JP	060360P3V326JP	4,859	P1C	524	1.15	81.2	93.0	30.807	200/400	30
60	45	3600	326JP	060360T3E326JP	5,432	P1C	572	1.15	71.0	93.6	30.807	208-230/460	
		1800	364/5JP	060180P3G364JP	5,254	P1C	819	1.15	70.2	93.6	32.019	460	30
		1800	364/5JP	060180T3E364JP	5,994	P1C	896	1.15	69.9	95.0	32.019	208-230/460	
		1800	364/5JP	060180T3G364JP	5,994	P1C	966	1.15	69.9	95.0	32.019	460	
		1200	404/5TCZ	060120T3E404JP	9,462	P1C	1035	1.15	71.2	94.5	35.263	208-230/460	
		3600	364/5JP	075360P3E364JP	6,226	P1C	860	1.15	84.3	93.0	32.019	208-230/460	30
		3600	364/5JP	075360P3G364JP	6,226	P1C	856	1.15	84.3	93.0	32.019	460	30
		3600	364/5JP	075360P3V364JP	6,226	P1C	854	1.15	96.9	93.0	32.019	200/400	30
		3600	364/5JP	075360T3E364JP	7,699	P1C	864	1.15	81.5	94.1	32.019	208-230/460	
75	55	3600	364/5JP	075360T3G364JP	7,699	P1C	809	1.15	81.5	94.1	32.019	460	
		1800	364/5JP	075180P3E365JP	5,989	P1C	897	1.15	85.3	94.1	32.019	208-230/460	30
		1800	364/5JP	075180T3E365JP	6,932	P1C	966	1.15	85.5	95.0	32.019	208-230/460	
		1800	364/5JP	075180T3G365JP	6,932	P1C	963	1.15	85.5	95.0	32.019	460	
		1200	404/5TCZ	075120T3E405JP	9,762	P1C	1200	1.15	85.9	94.5	35.263	208-230/460	

Continued on next page

Note: Flanged motors on Cast Iron frame sizes 143/5 to 254/6 have non-NEMA BA dimension. Refer to mechanical section of this catalog for details.

CLOSE-COUPLED PUMP ODP MOTORS

JP – ODP – Three-Phase *continued*

HP	kW	RPM	NEMA Frame	Catalog Number	List Price	Mult. Symbol	Approx. Shipping Weight (lbs)	Service Factor	FL Amps @ High	FL. Eff (%)	"C" Dimension (in)	Voltage (V)	Notes
100	75	3600	364/5JP	100360P3E365JP	7,005	P1C	901	1.15	114	93.0	32.019	208-230/460	30
		3600	364/5JP	100360P3G365JP	7,005	P1C	939	1.15	114	93.0	32.019	460	30
		3600	364/5JP	100360T3E365JP	8,173	P1C	925	1.15	111	94.5	32.019	208-230/460	
		3600	364/5JP	100360T3G365JP	8,173	P1C	924	1.15	111	94.5	32.019	460	
		1800	404/5TCZ	100180P3E404JP	7,469	P1C	1014	1.15	115	94.1	35.263	208-230/460	30
		1800	404/5TCZ	100180P3G404JP	7,469	P1C	1002	1.15	115	94.1	35.263	460	30
		1800	404/5TCZ	100180T3E404JP	8,783	P1C	1106	1.15	115	95.4	35.263	208-230/460	
		1800	404/5TCZ	100180T3G404JP	8,783	P1C	1102	1.15	115	95.4	35.263	460	
125	90	3600	404/5TCZ	125360P3G404JP	9,185	P1C	1010	1.15	134	93.6	35.263	460	30
		1800	404/5TCZ	125180P3G405JP	8,971	P1C	1172	1.15	142	94.5	35.263	460	30
150	110	3600	404/5TCZ	150360P3G405JP	12,106	P1C	1114	1.15	164	93.6	35.263	460	30

Note: Flanged motors on Cast Iron frame sizes 143/5 to 254/6 have non-NEMA BA dimension. Refer to mechanical section of this catalog for details.

Refer to electrical and mechanical data sections for additional technical information. Please refer to back cover for description of "NOTES"

For detailed specifications, data sheets, drawings and performance curves visit http://catalog.wegelectric.com

Data subject to change without notice.



CLOSE-COUPLED PUMP ODP MOTORS

JP – ODP – Three-Phase – Footless Vertical

HP	kW	RPM	NEMA Frame	Catalog Number	List Price	Mult. Symbol	Approx. Shipping Weight (lbs)	Service Factor	FL Amps @ High	FL. Eff (%)	"C" Dimension (in)	Voltage (V)	Notes
1.5	1.1	3600	E143/5JP	00156OP3E143JPV	513	P1C	36	1.15	1.95	84.0	18.425	208-230/460	9;15;30
		3600	143/5JP	00156OP3E143JPV-S	513	P1C	34	1.15	1.88	82.5	18.071	208-230/460	9;15;30
2	1.5	3600	E143/5JP	00236OP3E145JPV	559	P1C	42	1.15	2.50	85.5	18.425	208-230/460	9;15;30
		3600	143/5JP	00236OP3E145JPV-S	559	P1C	39	1.15	2.52	84	18.071	208-230/460	9;15;30
3	2.2	3600	F143/5JP	00336OP3E145JPV	629	P1C	50	1.15	3.65	85.5	19.212	208-230/460	9;15;30
		3600	143/5JP	00336OP3E145JPV-S	629	P1C	42	1.15	3.69	84	18.464	208-230/460	9;15;30
5	3.7	3600	182JP	00536OP3E182JPV	729	P1C	77	1.15	6.17	86.5	21.535	208-230/460	9;15;30
		3600	182/4JP	00536OP3E182JPV-S	729	P1C	60	1.15	6.24	85.5	19.823	208-230/460	9;15;30
7.5	5.5	3600	184JP	00736OP3E184JPV	993	P1C	88	1.15	8.97	87.5	22.322	208-230/460	9;15;30
		3600	182/4JP	00736OP3E184JPV-S	993	P1C	70	1.15	8.86	87.5	20.630	208-230/460	9;15;30
		3600	184JP	00736OP3V184JPV	993	P1C	88	1.15	10.3	87.5	22.322	200/400	9;15;30
		3600	182/4JP	00736OP3V184JPV-S	993	P1C	70	1.15	10.2	87.5	20.630	200/400	9;15;30
10	7.5	3600	213/5JP	01036OP3E213JPV	1,273	P1C	127	1.15	12.2	88.5	22.500	208-230/460	9;15;30
		3600	213/5JP	01036OP3E213JPV-S	1,273	P1C	115	1.15	12.2	88.5	22.835	208-230/460	9;15;30
		3600	213/5JP	01036OP3H213JPV	1,273	P1C	100	1.15	9.76	88.5	22.500	575	9;15;30
		3600	213/5JP	01036OP3H213JPV-S	1,273	P1C	115	1.15	9.80	88.5	22.835	575	9;15;30
		3600	213/5JP	01036OP3V213JPV	1,273	P1C	127	1.15	14.0	88.5	22.500	200/400	9;15;30
		3600	213/5JP	01036OP3V213JPV-S	1,273	P1C	115	1.15	14.1	88.5	22.835	200/400	9;15;30
15	11	3600	213/5JP	01536OP3E215JPV	1,617	P1C	142	1.15	17.5	89.5	22.500	208-230/460	9;15;30
		3600	213/5JP	01536OP3E215JPV-S	1,617	P1C	128	1.15	17.5	89.5	23.229	208-230/460	9;15;30
		3600	213/5JP	01536OP3H215JPV	1,617	P1C	142	1.15	14.0	89.5	22.500	575	9;15;30
		3600	213/5JP	01536OP3H215JPV-S	1,617	P1C	128	1.15	14.0	89.5	23.229	575	9;15;30
		3600	213/5JP	01536OP3V215JPV	1,617	P1C	141	1.15	20.1	89.5	22.500	200/400	9;15;30
		3600	213/5JP	01536OP3V215JPV-S	1,617	P1C	128	1.15	20.2	89.5	23.229	200/400	9;15;30
		1800	254JP	01518OP3V254JPV	1,938	P1C	239	1.15	21.5	91.0	26.978	200/400	15;30
		1800	254/6JP	01518OP3V254JPV-S	1,938	P1C	197	1.15	21.28	91	26.221	208-230/460	9;15;30
20	15	3600	254JP	02036OP3E254JPV	2,092	P1C	233	1.15	24.3	90.2	26.978	208-230/460	15;30
		3600	254/6JP	02036OP3E254JPV-S	2,092	P1C	196	1.15	23.7	90.2	26.221	208-230/460	9;15;30
		3600	254JP	02036OP3H254JPV	2,092	P1C	233	1.15	19.4	90.2	26.978	575	15;30
		3600	254/6JP	02036OP3H254JPV-S	2,092	P1C	196	1.15	19.0	90.2	26.221	575	9;15;30
		3600	254JP	02036OP3V254JPV	2,092	P1C	233	1.15	27.9	90.2	26.978	200/400	15;30
		3600	254/6JP	02036OP3V254JPV-S	2,092	P1C	196	1.15	27.3	90.2	26.221	200/400	9;15;30
25	18.5	3600	256JP	02536OP3E256JPV	2,518	P1C	259	1.15	29.3	91.0	28.711	208-230/460	15;30
		3600	254/6JP	02536OP3E256JPV-S	2,518	P1C	219	1.15	29.0	91	26.221	208-230/460	9;15;30
		3600	256JP	02536OP3H256JPV	2,518	P1C	259	1.15	23.4	91.0	28.711	575	15;30
		3600	254/6JP	02536OP3H256JPV-S	2,518	P1C	219	1.15	23.2	91	26.221	575	9;15;30
		3600	256JP	02536OP3V256JPV	2,518	P1C	259	1.15	33.7	91.0	28.711	200/400	15;30
		3600	254/6JP	02536OP3V256JPV-S	2,518	P1C	219	1.15	33.3	91	26.221	200/400	9;15;30
30	22	3600	284JP	03036OP3E284JPV	3,082	P1C	342	1.15	34.5	91.0	29.464	208-230/460	15;30
		3600	284JP	03036OP3V284JPV	3,082	P1C	345	1.15	39.7	91.0	29.464	200/400	15;30

Continued on next page

Refer to electrical and mechanical data sections for additional technical information. Please refer to back cover for description of "NOTES"

For detailed specifications, data sheets, drawings and performance curves visit http://catalog.wegelectric.com

CLOSE-COUPLED PUMP ODP MOTORS

JP – ODP – Three-Phase – Footless Vertical *continued*

HP	kW	RPM	NEMA Frame	Catalog Number	List Price	Mult. Symbol	Approx. Shipping Weight (lbs)	Service Factor	FL Amps @ High	FL. Eff (%)	"C" Dimension (in)	Voltage (V)	Notes
40	30	3600	286JP	040360P3E286JPV	3,611	P1C	385	1.15	46.1	91.7	30.957	208-230/460	15;30
		3600	286JP	040360P3V286JPV	3,611	P1C	390	1.15	53.0	91.7	30.957	200/400	15;30
		1800	324JP	040180P3E324JPV	3,987	P1C	521	1.15	49.4	93.0	32.027	208-230/460	15;30
		1800	324JP	040180P3V324JPV	3,987	P1C	521	1.15	56.8	93.0	32.027	200/400	15;30
50	37	3600	324JP	050360P3E324JPV	4,372	P1C	514	1.15	58.4	92.4	32.027	208-230/460	15;30
		3600	324JP	050360P3H324JPV	4,372	P1C	517	1.15	46.7	92.4	32.027	575	15;30
		3600	324JP	050360P3V324JPV	4,372	P1C	518	1.15	67.2	92.4	32.027	200/400	15;30
		1800	326JP	050180P3E326JPV	4,500	P1C	546	1.15	60.2	93.0	33.523	208-230/460	15;30
		1800	326JP	050180P3V326JPV	4,500	P1C	546	1.15	69.2	93.0	33.523	200/400	15;30
60	45	3600	326JP	060360P3E326JPV	5,105	P1C	561	1.15	70.6	93.0	33.523	208-230/460	15;30
		3600	326JP	060360P3V326JPV	5,105	P1C	564	1.15	81.2	93.0	33.523	200/400	15;30
		1800	364/5JP	060180P3E364JPV	6,142	P1C	810	1.15	70.2	93.6	35.208	208-230/460	15;30
		1800	364/5JP	060180P3V364JPV	6,142	P1C	747	1.15	80.7	93.6	35.208	200/400	15;30
75	55	3600	364/5JP	075360P3E364JPV	7,525	P1C	849	1.15	84.3	93.0	35.208	208-230/460	15;30
		3600	364/5JP	075360P3H364JPV	7,525	P1C	847	1.15	67.4	93.0	35.208	575	15;30
		3600	364/5JP	075360P3V364JPV	7,525	P1C	845	1.15	96.9	93.0	35.208	200/400	15;30
		1800	364/5JP	075180P3E365JPV	6,967	P1C	886	1.15	85.3	94.1	35.208	208-230/460	15;30
		1800	364/5JP	075180P3V365JPV	6,967	P1C	884	1.15	98.1	94.1	35.208	200/400	15;30
100	75	3600	364/5JP	100360P3E365JPV	8,860	P1C	890	1.15	114	93.0	35.208	208-230/460	15;30
		3600	364/5JP	100360P3H365JPV	8,860	P1C	939	1.15	91.2	93.0	35.208	575	15;30
		3600	364/5JP	100360P3V365JPV	8,860	P1C	890	1.15	131	93.0	35.208	200/400	15;30
		1800	404/5TCZ	100180P3E404JPV	8,825	P1C	963	1.15	115	94.1	38.452	208-230/460	15;30
		1800	404/5TCZ	100180P3V404JPV	8,825	P1C	961	1.15	132	94.1	38.452	200/400	15;30

Refer to electrical and mechanical data sections for additional technical information. Please refer to back cover for description of "NOTES"

For detailed specifications, data sheets, drawings and performance curves visit http://catalog.wegelectric.com

Data subject to change without notice.



CLOSE-COUPLED PUMP TEFC MOTORS - WITH INTERNAL AEGIS® SGR

JM – TEFC – Three-Phase

HP	kW	RPM	NEMA Frame	Catalog Number	List Price	Mult. Symbol	Approx. Shipping Weight (lbs)	Service Factor	FL Amps @ High	FL. Eff (%)	"C" Dimension (in)	Voltage (V)	Notes
1	0.75	1800	143/5JM	00118ET3E143JM-SG	753	P1	43	1.15	1.47	85.5	15.709	208-230/460	9;11;34
1.5	1.1	3600	143/5JM	00156ET3E143JM-SG	850	P1	39	1.15	1.87	84	15.709	208-230/460	9;11;34
		1800	143/5JM	00158ET3E145JM-SG	783	P1	43	1.15	2.02	86.5	15.709	208-230/460	9;11;34
2	1.5	3600	143/5JM	00236ET3E145JM-SG	823	P1	45	1.15	2.47	85.5	16.102	208-230/460	9;11;34
		1800	143/5JM	00218ET3E145JM-SG	847	P1	47	1.15	2.72	86.5	16.102	208-230/460	9;11;34
3	2.2	3600	182/4JM	00336ET3E182JM-SG	1,088	P1	71	1.15	3.67	86.5	17.835	208-230/460	9;11;34
		1800	182/4JM	00318ET3E182JM-SG	1,192	P1	87	1.15	3.81	89.5	19.390	208-230/460	9;11;34
5	3.7	3600	182/4JM	00536ET3E184JM-SG	1,245	P1	86	1.15	5.90	88.5	19.390	208-230/460	9;11;34
		1800	182/4JM	00518ET3E184JM-SG	1,311	P1	79	1.15	6.49	89.5	19.390	208-230/460	9;11;34
7.5	5.5	3600	213/5JM	00736ET3E213JM-SG	1,619	P1	144	1.15	8.67	89.5	20.433	208-230/460	9;11;34
		1800	213/5JM	00718ET3E213JM-SG	1,719	P1	131	1.15	9.07	91.7	20.039	208-230/460	9;11;34
10	7.5	3600	213/5JM	01036ET3E215JM-SG	1,969	P1	173	1.15	11.5	90.2	22.795	208-230/460	9;11;34
		1800	213/5JM	01018ET3E215JM-SG	1,992	P1	142	1.15	12.2	91.7	20.433	208-230/460	9;11;34
15	11	3600	213/5JM	01536ET3E215JM-SG	2,258	P1	181	1.15	17.1	91.0	22.795	208-230/460	9;11;34
		3600	254/6JM	01536ET3E254JM-SG	2,494	P1	220	1.15	17.4	91	24.055	208-230/460	9;11;34
		1800	254/6JM	01518ET3E254JM-SG	2,889	P1	242	1.15	18.2	92.4	24.055	208-230/460	9;11;34
20	15	3600	254/6JM	02036ET3E256JM-SG	3,245	P1	256	1.15	22.7	91	24.055	208-230/460	9;11;34
		1800	254/6JM	02018ET3E256JM-SG	3,137	P1	271	1.15	24.5	92.4	24.843	208-230/460	9;11;34

Refer to electrical and mechanical data sections for additional technical information. Please refer to back cover for description of “NOTES”

For detailed specifications, data sheets, drawings and performance curves visit http://catalog.wegelectric.com

CLOSE-COUPLED PUMP TEFC MOTORS - WITH INTERNAL AEGIS® SGR

JP – TEFC – Three-Phase



HP	kW	RPM	NEMA Frame	Catalog Number	List Price	Mult. Symbol	Approx. Shipping Weight (lbs)	Service Factor	FL Amps @ High	FL. Eff (%)	"C" Dimension (in)	Voltage (V)	Notes
1	0.75	1800	143/5JP	00118ET3E143JP-SG	764	P1	43	1.15	1.47	85.5	18.780	208-230/460	9;11;34
1.5	1.1	3600	143/5JP	00156ET3E143JP-SG	789	P1	39	1.15	1.87	84	18.780	208-230/460	9;11;34
		1800	143/5JP	00158ET3E145JP-SG	793	P1	43	1.15	2.02	86.5	18.780	208-230/460	9;11;34
2	1.5	3600	143/5JP	00236ET3E145JP-SG	834	P1	45	1.15	2.47	85.5	19.173	208-230/460	9;11;34
		1800	143/5JP	00218ET3E145JP-SG	858	P1	47	1.15	2.72	86.5	19.173	208-230/460	9;11;34
3	2.2	3600	182/4JP	00336ET3E182JP-SG	1,103	P1	71	1.15	3.67	86.5	20.906	208-230/460	9;11;34
		1800	182/4JP	00318ET3E182JP-SG	1,211	P1	87	1.15	3.81	89.5	22.461	208-230/460	9;11;34
5	3.7	3600	182/4JP	00536ET3E184JP-SG	1,264	P1	86	1.15	5.90	88.5	22.461	208-230/460	9;11;34
		1800	182/4JP	00518ET3E184JP-SG	1,331	P1	79	1.15	6.49	89.5	22.461	208-230/460	9;11;34
7.5	5.5	3600	213/5JP	00736ET3E213JP-SG	1,645	P1	144	1.15	8.67	89.5	24.291	208-230/460	9;11;34
		1800	213/5JP	00718ET3E213JP-SG	1,743	P1	131	1.15	9.07	91.7	23.898	208-230/460	9;11;34
10	7.5	3600	213/5JP	01036ET3E215JP-SG	2,001	P1	173	1.15	11.5	90.2	26.654	208-230/460	9;11;34
		1800	213/5JP	01018ET3E215JP-SG	2,023	P1	142	1.15	12.2	91.7	24.291	208-230/460	9;11;34
15	11	3600	254/6JP	01536ET3E254JP-SG	2,909	P1	220	1.15	17.4	91	26.929	208-230/460	9;11;34
		1800	254/6JP	01518ET3E254JP-SG	2,933	P1	242	1.15	18.2	92.4	26.929	208-230/460	9;11;34
20	15	3600	254/6JP	02036ET3E256JP-SG	3,298	P1	256	1.15	22.7	91	26.929	208-230/460	9;11;34
		1800	254/6JP	02018ET3E256JP-SG	3,188	P1	271	1.15	24.5	92.4	27.717	208-230/460	9;11;34

Refer to electrical and mechanical data sections for additional technical information. Please refer to back cover for description of "NOTES"

For detailed specifications, data sheets, drawings and performance curves visit http://catalog.wegelectric.com

Data subject to change without notice.



CLOSE-COUPLED PUMP ODP MOTORS - WITH INTERNAL AEGIS® SGR

JM – ODP – Three-Phase

HP	kW	RPM	NEMA Frame	Catalog Number	List Price	Mult. Symbol	Approx. Shipping Weight (lbs)	Service Factor	FL Amps @ High	FL. Eff (%)	"C" Dimension (in)	Voltage (V)	Notes
1	0.75	1800	143/5JM	00118OT3E143JM-SG	626	P1C	39	1.15	1.51	85.5	13.701	208-230/460	9;11;34
1.5	1.1	3600	143/5JM	00156OT3E143JM-SG	674	P1C	34	1.15	1.85	84	13.701	208-230/460	9;11;34
		1800	143/5JM	00158OT3E145JM-SG	693	P1C	47	1.15	2.07	86.5	14.488	208-230/460	9;11;34
2	1.5	3600	143/5JM	00236OT3E145JM-SG	720	P1C	42	1.15	2.42	85.5	14.094	208-230/460	9;11;34
		1800	143/5JM	00218OT3E145JM-SG	747	P1C	44	1.15	2.69	86.5	14.488	208-230/460	9;11;34
3	2.2	3600	143/5JM	00336OT3E145JM-SG	800	P1C	45	1.15	3.59	85.5	14.488	208-230/460	9;11;34
		1800	182/4JM	00318OT3E182JM-SG	835	P1C	73	1.15	3.86	89.5	16.634	208-230/460	9;11;34
5	3.7	3600	182/4JM	00536OT3E182JM-SG	950	P1C	66	1.15	6.10	86.5	16.260	208-230/460	9;11;34
		1800	182/4JM	00518OT3E184JM-SG	1,019	P1C	87	1.15	6.33	89.5	17.815	208-230/460	9;11;34
7.5	5.5	3600	182/4JM	00736OT3E184JM-SG	1,256	P1C	77	1.15	8.67	88.5	16.634	208-230/460	9;11;34
		1800	213/5JM	00718OT3E213JM-SG	1,319	P1C	128	1.15	9.14	91	17.717	208-230/460	9;11;34
10	7.5	3600	213/5JM	01036OT3E213JM-SG	1,489	P1C	128	1.15	12.0	89.5	18.110	208-230/460	9;11;34
		1800	213/5JM	01018OT3E215JM-SG	1,564	P1C	149	1.15	12.4	91.7	18.898	208-230/460	9;11;34
15	11	3600	213/5JM	01536OT3E215JM-SG	1,907	P1C	143	1.15	17.2	90.2	18.898	208-230/460	9;11;34
		1800	254/6JM	01518OT3E254JM-SG	2,275	P1C	220	1.15	18.3	93	21.969	208-230/460	9;11;34
20	15	3600	254/6JM	02036OT3E254JM-SG	2,387	P1C	196	1.15	23.8	91	21.969	208-230/460	9;11;34
		1800	254/6JM	02018OT3E256JM-SG	2,693	P1C	243	1.15	24.7	93	21.969	208-230/460	9;11;34
25	18.5	3600	254/6JM	02536OT3E256JM-SG	2,878	P1C	219	1.15	29.1	91.7	21.969	208-230/460	9;11;34

Refer to electrical and mechanical data sections for additional technical information. Please refer to back cover for description of “NOTES”

For detailed specifications, data sheets, drawings and performance curves visit http://catalog.wegelectric.com

CLOSE-COUPLED PUMP ODP MOTORS - WITH INTERNAL AEGIS® SGR



AEGIS SGR SHAFT GROUNDING BEARING PROTECTION RING AEGIS INSTALLED Patented Technology

JP – ODP – Three-Phase

HP	kW	RPM	NEMA Frame	Catalog Number	List Price	Mult. Symbol	Approx. Shipping Weight (lbs)	Service Factor	FL Amps @ High	FL. Eff (%)	"C" Dimension (in)	Voltage (V)	Notes
1	0.75	1800	143/5JP	00118OT3E143JP-SG	626	P1C	39	1.15	1.51	85.5	16.772	208-230/460	9;11;34
1.5	1.1	3600	143/5JP	00156OT3E143JP-SG	674	P1C	34	1.15	1.85	84	16.772	208-230/460	9;11;34
		1800	143/5JP	00158OT3E145JP-SG	693	P1C	47	1.15	2.07	86.5	17.559	208-230/460	9;11;34
2	1.5	3600	143/5JP	00236OT3E145JP-SG	720	P1C	42	1.15	2.42	85.5	17.165	208-230/460	9;11;34
		1800	143/5JP	00218OT3E145JP-SG	747	P1C	44	1.15	2.69	86.5	17.559	208-230/460	9;11;34
3	2.2	3600	143/5JP	00336OT3E145JP-SG	800	P1C	45	1.15	3.59	85.5	17.559	208-230/460	9;11;34
		1800	182/4JP	00318OT3E182JP-SG	835	P1C	73	1.15	3.86	89.5	19.705	208-230/460	9;11;34
5	3.7	3600	182/4JP	00536OT3E182JP-SG	962	P1C	66	1.15	6.10	86.5	19.331	208-230/460	9;11;34
		1800	182/4JP	00518OT3E184JP-SG	1,018	P1C	87	1.15	6.33	89.5	20.886	208-230/460	9;11;34
7.5	5.5	3600	182/4JP	00736OT3E184JP-SG	1,256	P1C	77	1.15	8.67	88.5	19.705	208-230/460	9;11;34
		1800	213/5JP	00718OT3E213JP-SG	1,320	P1C	128	1.15	9.14	91	21.575	208-230/460	9;11;34
10	7.5	3600	213/5JP	01036OT3E213JP-SG	1,489	P1C	128	1.15	12.0	89.5	21.969	208-230/460	9;11;34
		1800	213/5JP	01018OT3E215JP-SG	1,566	P1C	149	1.15	12.4	91.7	22.756	208-230/460	9;11;34
15	11	3600	213/5JP	01536OT3E215JP-SG	1,907	P1C	143	1.15	17.2	90.2	22.756	208-230/460	9;11;34
		1800	254/6JP	01518OT3E254JP-SG	2,275	P1C	220	1.15	18.3	93	24.843	208-230/460	9;11;34
20	15	3600	254/6JP	02036OT3E254JP-SG	2,386	P1C	196	1.15	23.8	91	24.843	208-230/460	9;11;34
		1800	254/6JP	02018OT3E256JP-SG	2,693	P1C	243	1.15	24.7	93	24.843	208-230/460	9;11;34
25	18.5	3600	254/6JP	02536OT3E256JP-SG	2,879	P1C	219	1.15	29.1	91.7	24.843	208-230/460	9;11;34

Refer to electrical and mechanical data sections for additional technical information. Please refer to back cover for description of "NOTES"

For detailed specifications, data sheets, drawings and performance curves visit http://catalog.wegelectric.com

Data subject to change without notice.

Pump Motors

FIRE PUMP MOTORS

ODP - Three Phase - High Efficiency

WEG Open Drip Proof motors are designed to meet demanding applications in environments where dirt and humidity are minimal. These motors are specifically designed to provide maximum ventilation and cool operation.



Inverter Rated:
1000:1 for variable torque

Features that make a difference:

- 50/60 Hz rated (380V on Nameplate)
- 400/415 Available - Same Horse Power at 50 Hz with a 1.15 service factor - Except motors with (note 31)
- Class F insulation (Impregnation Resin and Magnet wire are class H)
- Class B Rise at 1.15 Service Factor
- F1 Mounted (Cast Iron Frame motors are F2 convertible)
- Stainless Steel Nameplate - Laser etched with high contrast background (Cast Iron Frames only)
- Cast Iron Frames: Regreasable ball bearings (Frames 254T and up)
- Rolled Steel Frames: ZZ ball bearings (Permanently lubricated)
- UL Listed for Fire Pump service

ADDITIONAL TECHNICAL DATA

ELECTRICAL DATA: B-22
MECHANICAL DATA: C-11; C-15

FIRE PUMP MOTORS



ODP – Three-Phase – High Efficiency

HP	kW	RPM	NEMA Frame	Catalog Number	List Price	Mult. Symbol	Approx. Shipping Weight (lbs)	Service Factor	FL Amps @ High	FL. Eff (%)	"C" Dimension (in)	Voltage (V)	Notes
7.5	5.5	3600	184TC	007360P3HFP184TC	734	W1B	74	1.15	7.18	87.5	14.291	575	9;30
		3600	182/4TC	007360P3HFP184TC-S	734	W1B	70	1.15	7.09	87.5	14.764	575	9;30
		3600	184TC	007360P3VFP184TC	734	W1B	74	1.15	10.3	87.5	14.291	200/400	9;30
		3600	182/4TC	007360P3VFP184TC-S	734	W1B	70	1.15	10.2	87.5	14.764	200/400	9;30
10	7.5	3600	213TC	010360P3EFP213TC	901	W1B	112	1.15	12.2	88.5	17.165	208-230/460	31
		3600	213/5TC	010360P3EFP213TC-S	901	W1B	115	1.15	12.2	88.5	16.575	208-230/460	9;30;31
		3600	213TC	010360P3HFP213TC	901	W1B	112	1.15	9.76	88.5	17.165	575	
		3600	213/5TC	010360P3HFP213TC-S	901	W1B	115	1.15	9.80	88.5	16.575	575	9;30
15	11	3600	215TC	015360P3EFP215TC	1,232	W1B	125	1.15	17.5	89.5	17.165	208-230/460	31
		3600	213/5TC	015360P3EFP215TC-S	1,232	W1B	128	1.15	17.5	89.5	16.969	208-230/460	9;30;31
		3600	215T	015360P3HFP215T	1,232	W1B	124	1.15	14.0	89.5	17.165	575	9;30
		3600	213/5T	015360P3HFP215T-S	1,232	W1B	128	1.15	14.0	89.5	16.969	575	9;30
		3600	215TC	015360P3VFP215TC	1,232	W1B	139	1.15	20.1	89.5	17.165	200/400	30;31
		3600	213/5TC	015360P3VFP215TC-S	1,232	W1B	128	1.15	20.2	89.5	16.969	200/400	9;30;31
20	15	3600	254T	020360P3EFP254T	1,469	W1B	226	1.15	24.3	90.2	20.669	208-230/460	31
		3600	254TC	020360P3EFP254TC	1,469	W1B	227	1.15	24.3	90.2	20.669	208-230/460	31
		3600	254/6TC	020360P3EFP254TC-S	1,469	W1B	196	1.15	23.7	90.2	20.472	208-230/460	9;30;31
		3600	254/6T	020360P3EFP254T-S	1,469	W1B	196	1.15	23.7	90.2	20.472	208-230/460	9;30;31
		3600	254TC	020360P3HFP254TC	1,469	W1B	227	1.15	19.4	90.2	20.669	575	30
		3600	254/6TC	020360P3HFP254TC-S	1,469	W1B	196	1.15	19.0	90.2	20.472	575	9;30
		3600	254TC	020360P3VFP254TC	1,469	W1B	227	1.15	28.0	90.2	20.669	200/400	30;31
		3600	254/6TC	020360P3VFP254TC-S	1,469	W1B	196	1.15	27.3	90.2	20.472	200/400	9;30;31
		1800	256T	020180P3EFP256T	1,526	W1B	260	1.15	25.5	91.0	22.401	208-230/460	
		1800	254/6T	020180P3EFP256T-S	1,526	W1B	211	1.15	24.9	91	20.472	208-230/460	9;30
25	18.5	3600	256T	025360P3EFP256T	1,783	W1B	251	1.15	29.3	91.0	22.401	208-230/460	
		3600	256TC	025360P3EFP256TC	1,783	W1B	253	1.15	29.3	91.0	22.401	208-230/460	
		3600	254/6TC	025360P3EFP256TC-S	1,783	W1B	219	1.15	29.0	91	20.472	208-230/460	9;30
		3600	254/6T	025360P3EFP256T-S	1,783	W1B	219	1.15	29.0	91	20.472	208-230/460	9;30
		3600	256TC	025360P3VFP256TC	1,783	W1B	253	1.15	33.7	91.0	22.401	200/400	30
		3600	254/6TC	025360P3VFP256TC-S	1,783	W1B	219	1.15	33.3	91	20.472	200/400	9;30;31
		1800	284TS	025180P3EFP284TS	1,799	W1B	330	1.15	30.1	91.7	22.000	208-230/460	
		1800	284TS	025180P3VFP284TS	1,799	W1B	311	1.15	34.6	91.7	22.000	200/400	
30	22	3600	284TS	030360P3EFP284TS	2,033	W1B	328	1.15	34.5	91.0	22.000	208-230/460	
		3600	284TSC	030360P3EFP284TSC	2,033	W1B	312	1.15	34.5	91.0	22.000	208-230/460	
		3600	284TS	030360P3HFP284TS	2,033	W1B	328	1.15	27.6	91.0	22.000	575	30
		3600	284TS	030360P3VFP284TS	2,033	W1B	373	1.15	39.1	92.4	22.000	200/400	
		3600	284TSC	030360P3VFP284TSC	2,033	W1B	373	1.15	39.1	92.4	22.000	200/400	
		1800	286TS	030180P3EFP286TS	2,108	W1B	369	1.15	35.6	92.4	23.504	208-230/460	
		1800	286TS	030180P3VFP286TS	2,108	W1B	397	1.15	40.9	92.4	23.504	200/400	

Continued on next page

Note: Flanged motors on Cast Iron frame sizes 143/5 to 254/6 have non-NEMA BA dimension. Refer to mechanical section of this catalog for details.

Refer to electrical and mechanical data sections for additional technical information. Please refer to back cover for description of "NOTES"

For detailed specifications, data sheets, drawings and performance curves visit http://catalog.wegelectric.com

Data subject to change without notice.

ODP – Three-Phase – High Efficiency *continued*

HP	kW	RPM	NEMA Frame	Catalog Number	List Price	Mult. Symbol	Approx. Shipping Weight (lbs)	Service Factor	FL Amps @ High	FL. Eff (%)	"C" Dimension (in)	Voltage (V)	Notes
40	30	3600	286TS	040360P3EFP286TS	2,757	W1B	365	1.15	46.1	91.7	23.504	208-230/460	
		3600	286TSC	040360P3EFP286TSC	2,757	W1B	348	1.15	46.1	91.7	23.504	208-230/460	
		3600	286TSC	040360P3HFP286TSC	2,757	W1B	348	1.15	36.9	91.7	23.504	575	30
		3600	286TS	040360P3VFP286TS	2,757	W1B	457	1.15	51.5	92.4	23.504	200/400	
		3600	286TSC	040360P3VFP286TSC	2,757	W1B	457	1.15	51.5	92.4	23.504	200/400	
		1800	324TS	040180P3EFP324TS	2,652	W1B	529	1.15	49.4	93.0	24.685	208-230/460	
		1800	324TS	040180P3VFP324TS	2,652	W1B	495	1.15	55.4	93.0	24.685	200/400	
50	37	3600	324TS	050360P3EFP324TS	3,184	W1B	526	1.15	54.8	92.4	24.685	208-230/460	
		3600	324TSC	050360P3EFP324TSC	3,184	W1B	541	1.15	54.8	92.4	24.685	208-230/460	
		3600	324TS	050360P3HFP324TS	3,184	W1B	525	1.15	46.7	92.4	24.685	575	
		3600	324TS	050360P3VFP324TS	3,184	W1B	523	1.15	64.9	93.6	24.685	200/400	
		3600	324TSC	050360P3VFP324TSC	3,184	W1B	523	1.15	64.9	93.6	24.685	200/400	
		1800	326TC	050180P3EFP326TC	3,135	W1B	530	1.15	60.2	93.0	27.667	208-230/460	30;31
		1800	326TS	050180P3EFP326TS	3,015	W1B	513	1.15	60.2	93.0	26.181	208-230/460	31
		1800	326TS	050180P3VFP326TS	3,015	W1B	583	1.15	69.2	93.0	26.181	200/400	31
60	45	3600	326TS	060360P3EFP326TS	4,008	W1B	532	1.15	70.6	93.0	26.181	208-230/460	31
		3600	326TSC	060360P3EFP326TSC	4,448	W1B	609	1.15	70.6	93.0	26.181	208-230/460	30;31
		3600	326TS	060360P3HFP326TS	4,008	W1B	529	1.15	56.5	93.0	26.181	575	
		3600	326TS	060360P3VFP326TS	4,008	W1B	609	1.15	81.2	93.0	26.181	200/400	31
		1800	364/5TS	060180P3EFP364TS	3,703	W1B	800	1.15	70.2	93.6	27.638	208-230/460	
		1800	364/5TS	060180P3HFP364TS	3,703	W1B	797	1.15	56.2	93.6	27.638	575	
		1800	364/5TS	060180P3VFP364TS	3,703	W1B	743	1.15	80.7	93.6	27.638	200/400	
75	55	3600	364/5TS	075360P3EFP364TS	5,074	W1B	840	1.15	84.3	93.0	27.638	208-230/460	
		3600	364/5TS	075360P3HFP364TS	5,074	W1B	838	1.15	67.4	93.0	27.638	575	
		3600	364/5TS	075360P3VFP364TS	5,074	W1B	805	1.15	92.7	94.1	27.638	200/400	
		1800	365TC	075180P3EFP365TC	5,109	W1B	911	1.15	85.3	94.1	29.764	208-230/460	30;31
		1800	364/5TS	075180P3EFP365TS	4,715	W1B	877	1.15	85.3	94.1	27.638	208-230/460	
		1800	364/5TS	075180P3HFP365TS	4,715	W1B	871	1.15	68.2	94.1	27.638	575	
		1800	364/5TS	075180P3VFP365TS	4,715	W1B	935	1.15	98.1	94.1	27.638	200/400	
100	75	3600	364/5TS	100360P3EFP365TS	6,152	W1B	880	1.15	114	93.0	27.638	208-230/460	31
		3600	364/5TS	100360P3HFP365TS	6,152	W1B	877	1.15	91.2	93.0	27.638	575	
		3600	364/5TS	100360P3VFP365TS	6,152	W1B	935	1.15	127	94.1	27.638	200/400	31
		1800	404/5T	100180P3EFP404T	6,065	W1B	1020	1.15	115	94.1	34.133	208-230/460	31
		1800	404/5TC	100180P3EFP404TC	6,510	W1B	1047	1.15	115	94.1	34.133	208-230/460	30;31
		1800	404/5TS	100180P3EFP404TS	6,065	W1B	995	1.15	115	94.1	31.141	208-230/460	31
		1800	404/5TC	100180P3HFP404TC	6,510	W1B	1047	1.15	92.0	94.1	34.133	575	30
		1800	404/5TS	100180P3HFP404TS	6,065	W1B	1013	1.15	92.0	94.1	31.141	575	
		1800	404/5TS	100180P3VFP404TS	6,065	W1B	1037	1.15	115	94.1	31.141	200/400	31

Continued on next page

Note: Flanged motors on Cast Iron frame sizes 143/5 to 254/6 have non-NEMA BA dimension. Refer to mechanical section of this catalog for details.

FIRE PUMP MOTORS

ODP – Three-Phase – High Efficiency *continued*

HP	kW	RPM	NEMA Frame	Catalog Number	List Price	Mult. Symbol	Approx. Shipping Weight (lbs)	Service Factor	FL Amps @ High	FL. Eff (%)	"C" Dimension (in)	Voltage (V)	Notes
125	90	3600	404/5TS	125360P3GFP404TS	7,762	W1B	1008	1.15	134	93.6	31.141	460	31
		3600	404/5TS	125360P3HFP404TS	7,762	W1B	1010	1.15	107	93.6	31.141	575	
		1800	404/5TC	125180P3GFP405TC	6,651	W1B	1090	1.15	142	94.5	34.133	460	30;31
		1800	404/5TS	125180P3GFP405TS	6,651	W1B	1039	1.15	142	94.5	31.141	460	31
		1800	404/5TC	125180P3HFP405TC	6,651	W1B	1090	1.15	110	94.5	34.133	575	30
		1800	404/5TS	125180P3HFP405TS	6,651	W1B	1038	1.15	114	94.5	31.141	575	
150	110	3600	404/5TS	150360P3GFP405TS	10,042	W1B	1112	1.15	164	93.6	31.141	460	31
		3600	404/5TS	150360P3HFP405TS	10,042	W1B	1106	1.15	131	93.6	31.141	575	
		1800	444/5TS	150180P3GFP444TS	8,891	W1B	1299	1.15	167	95.0	36.062	460	
		1800	444/5TS	150180P3HFP444TS	8,891	W1B	1305	1.15	134	95.0	36.062	575	
200	150	3600	444/5TS	200360P3GFP444TS	12,782	W1B	1514	1.15	224	94.5	36.062	460	
		1800	444/5TS	200180P3GFP445TS	10,837	W1B	1449	1.15	225	95.0	36.062	460	31
		1800	444/5TS	200180P3HFP445TS	10,837	W1B	1916	1.15	180	95.0	36.062	575	

Note: Flanged motors on Cast Iron frame sizes 143/5 to 254/6 have non-NEMA BA dimension. Refer to mechanical section of this catalog for details.

Refer to electrical and mechanical data sections for additional technical information. Please refer to back cover for description of “NOTES”

For detailed specifications, data sheets, drawings and performance curves visit http://catalog.wegelectric.com

Data subject to change without notice.



FIRE PUMP MOTORS

TEFC (50Hz) – Three-Phase – IE2

HP	kW	RPM	NEMA Frame	Catalog Number	List Price	Mult. Symbol	Approx. Shipping Weight (lbs)	Service Factor	FL Amps @ High	FL. Eff (%)	"C" Dimension (in)	Voltage (V)	Notes
15	11	3000	254T	01530EP30FP254T-W22	1,788	W1	249	1.15	20.2	90.0	23.213	380-415	30;32
		1500	254T	01515EP30FP254T-W22	1,811	W1	281	1.15	21.6	90.3	23.213	380-415	30;32
20	15	3000	256T	02030EP30FP256T-W22	2,334	W1	289	1.15	26.0	90.5	24.945	380-415	30;32
		1500	256T	02015EP30FP256T-W22	2,157	W1	330	1.15	27.7	90.9	24.945	380-415	30;32
25	18.5	3000	284TS	02530EP30FP284TS-W22	2,938	W1	368	1.15	31.6	91.0	25.061	380-415	30
		1500	284TS	02515EP30FP284TS-W22	2,688	W1	395	1.15	33.3	92.0	25.061	380-415	30;32
30	22	3000	286TS	03030EP30FP286TS-W22	3,490	W1	399	1.15	37.5	91.5	26.557	380-415	30
		1500	286TS	03015EP30FP286TS-W22	3,159	W1	447	1.15	39.8	92.0	26.557	380-415	30;32
40	30	3000	324TS	04030EP30FP324TS-W22	4,489	W1	525	1.15	50.3	92.5	28.120	380-415	30;32
		1500	324TS	04015EP30FP324TS-W22	3,969	W1	532	1.15	54.2	92.5	28.120	380-415	30;32
50	37	3000	326TS	05030EP30FP326TS-W22	5,050	W1	562	1.15	62.6	92.8	29.616	380-415	30
		1500	326TS	05015EP30FP326TS-W22	4,845	W1	567	1.15	66.2	93.0	29.616	380-415	30
60	45	3000	364TS	06030EP30FP364TS-W22	7,174	W1	807	1.15	74.2	93.0	32.276	380-415	30
		1500	364TS	06015EP30FP364TS-W22	7,020	W1	877	1.15	77.5	93.7	32.276	380-415	30
75	55	3000	365TS	07530EP30FP365TS-W22	8,636	W1	856	1.15	91.2	93.5	32.276	380-415	30
		1500	365TS	07515EP30FP365TS-W22	8,270	W1	909	1.15	94.4	94.0	32.276	380-415	30
100	75	3000	405TS	10030EP30FP405TS-W22	11,402	W1	1078	1.15	122	94.0	36.732	380-415	30
		1500	405TS	10015EP30FP405TS-W22	11,105	W1	1185	1.15	124	94.0	36.732	380-415	30
125	90	3000	444TS	12530EP30FP444TS-W22	14,583	W1	1660	1.15	156	94.5	41.20	380-415	30;32
		1500	444TS	12515EP30FP444TS-W22	14,011	W1	1670	1.15	160	94.6	41.20	380-415	30;32
150	110	3000	445TS	15030EP30FP445TS-W22	17,938	W1	1779	1.15	184	95.0	41.20	380-415	30;32
		1500	445TS	15015EP30FP445TS-W22	16,549	W1	1791	1.15	190	95.0	41.20	380-415	30
200	150	3000	447TS	20030EP30FP447TS-W22	22,384	W1	2070	1.15	236	95.2	44.951	380-415	30
		1500	447TS	20015EP30FP447TS-W22	20,043	W1	2098	1.15	256	95.3	44.951	380-415	30
250	185	3000	449TS	25030EP30FP449TS-W22	31,514	W1	2388	1.15	293	95.6	52.588	380-415	30
		1500	449TS	25015EP30FP449TS-W22	25,463	W1	2922	1.15	318	95.5	52.588	380-415	30

ADDITIONAL TECHNICAL DATA

ELECTRICAL DATA: B-52
MECHANICAL DATA: C-2

Refer to electrical and mechanical data sections for additional technical information. Please refer to back cover for description of “NOTES”

For detailed specifications, data sheets, drawings and performance curves visit http://catalog.wegelectric.com

Data subject to change without notice.

Pump Motors

P-BASE MOTORS

TEFC - Three Phase - High Efficiency

HP and HPH types available. Suitable for dusty and moist environments providing high starting torque.



Standard Features:

- 50/60 Hz capable
- Class F insulation (Impregnation Resin and magnet Wire are class H)
- Stainless Steel Nameplate - Laser etched with high contrast background
- Regreasable ball bearings (Frames 254HP and up)
- Gasketed conduit box
- Class I, Div. 2, Groups A, B, C & D – T3, Class II, Div 2, Groups F & G – T3C

Features that make a difference:

- 1.25 service factor up to 100 HP
- NPT Threaded terminal box
- HP and HPH types available
- NPT Threaded terminal box

Inverter Rated:
1000:1 for variable torque

ADDITIONAL TECHNICAL DATA

ELECTRICAL DATA: Contact WEG
MECHANICAL DATA: C-43



TEFC – Three-Phase – High Efficiency

HP	kW	RPM	NEMA Frame	Catalog Number	List Price	Mult. Symbol	Approx. Shipping Weight (lbs)	Service Factor	FL Amps @ High	FL. Eff (%)	"C" Dimension (in)	Voltage (V)	Notes
1	0.75	1800	143HP	00118EP3E143HP	503	P1F	52	1.25	1.48	82.5	13.421	208-230/460	15;30
1.5	1.1	3600	143HP	00156EP3E143HP	546	P1F	54	1.25	2.07	82.5	13.421	208-230/460	15;30
		1800	145HP	00158EP3E145HP	529	P1F	59	1.25	2.05	84.0	14.397	208-230/460	15;30
2	1.5	3600	145HP	00236EP3E145HP	553	P1F	59	1.25	2.60	84.0	14.397	208-230/460	15;30
		1800	145HP	00218EP3E145HP	583	P1F	59	1.25	2.77	84.0	14.397	208-230/460	15;30
3	2.2	3600	145HP	00336EP3E145HP	822	P1F	62	1.25	3.71	85.5	14.397	208-230/460	15;30
		3600	182HP	00336EP3E182HP	881	P1F	105	1.25	3.71	85.5	15.504	208-230/460	15;30
		1800	182HP	00318EP3E182HP	879	P1F	100	1.25	4.05	87.5	15.504	208-230/460	15;30
5	3.7	3600	184HP	00536EP3E184HP	1,032	P1F	117	1.25	5.90	87.5	16.504	208-230/460	15;30
		1800	184HP	00518EP3E184HP	995	P1F	98	1.25	6.55	87.5	16.504	208-230/460	15;30
7.5	5.5	3600	184HP	00736EP3E184HP	1,268	P1F	124	1.25	8.76	88.5	16.504	208-230/460	15;30
		3600	213HP	00736EP3E213HP	1,371	P1F	161	1.25	8.67	88.5	18.630	208-230/460	15;30
		1800	213HP	00718EP3E213HP	1,306	P1F	155	1.25	9.52	89.5	18.630	208-230/460	15;30
10	7.5	3600	215HP	01036EP3E215HP	1,645	P1F	178	1.25	11.7	89.5	20.126	208-230/460	15;30
		1800	215HP	01018EP3E215HP	1,563	P1F	178	1.25	12.8	89.5	20.126	208-230/460	15;30
15	11	3600	215HP	01536EP3E215HP	2,133	P1F	189	1.25	17.2	90.2	20.126	208-230/460	15;30
		3600	254HP	01536EP3E254HP	2,345	P1F	285	1.25	17.0	90.2	23.723	208-230/460	15;30
		1800	254HP	01518EP3E254HP	2,346	P1F	298	1.25	18.1	91.0	23.723	208-230/460	15;30
20	15	3600	254HP	02036EP3E254HP	2,608	P1F	310	1.25	23.3	90.2	23.723	208-230/460	15;30
		3600	256HP	02036EP3E256HP	2,814	P1F	299	1.25	23.5	90.2	25.455	208-230/460	15;30
		1800	256HP	02018EP3E256HP	2,591	P1F	326	1.25	24.6	91.0	25.455	208-230/460	15;30
25	18.5	3600	256HP	02536EP3E256HP	3,177	P1F	333	1.25	28.4	91.0	25.455	208-230/460	15;30
		3600	284HP	02536EP3E284HP	3,454	P1F	446	1.25	29.0	91.0	26.350	208-230/460	15;30
		3600	284HPH	02536EP3E284HPH	3,454	P1F	446	1.25	29.0	91.0	28.100	208-230/460	15;30
		1800	284HP	02518EP3E284HP	3,451	P1F	454	1.25	29.6	92.4	26.350	208-230/460	15;30
		1800	284HPH	02518EP3E284HPH	3,451	P1F	477	1.25	29.6	92.4	28.100	208-230/460	15;30
30	22	3600	284HP	03036EP3E284HP	3,848	P1F	446	1.25	33.7	91.0	26.350	208-230/460	15;30
		3600	286HP	03036EP3E286HP	4,157	P1F	459	1.25	33.7	91.0	27.845	208-230/460	15;30
		3600	286HPH	03036EP3E286HPH	4,157	P1F	480	1.25	33.7	91.0	29.595	208-230/460	15;30
		1800	286HP	03018EP3E286HP	3,778	P1F	485	1.25	34.7	92.4	27.845	208-230/460	15;30
		1800	286HPH	03018EP3E286HPH	3,778	P1F	508	1.25	34.7	92.4	29.595	208-230/460	15;30
40	30	3600	286HP	04036EP3E286HP	4,914	P1F	498	1.25	46.7	91.7	27.845	208-230/460	15;30
		3600	324HP	04036EP3E324HP	5,197	P1F	618	1.25	46.1	91.7	30.403	208-230/460	15;30
		1800	324HP	04018EP3E324HP	4,997	P1F	621	1.25	47.6	93.0	30.403	208-230/460	15;30
50	37	3600	324HP	05036EP3E324HP	6,153	P1F	656	1.25	56.5	92.4	30.403	208-230/460	15;30
		3600	326HP	05036EP3E326HP	6,363	P1F	652	1.25	56.5	92.4	31.897	208-230/460	15;30
		1800	326HP	05018EP3E326HP	5,723	P1F	678	1.25	58.7	93.0	31.897	208-230/460	15;30

Continued on next page

Refer to electrical and mechanical data sections for additional technical information. Please refer to back cover for description of "NOTES"

For detailed specifications, data sheets, drawings and performance curves visit http://catalog.wegelectric.com

Data subject to change without notice.

P-BASE MOTORS

TEFC – Three-Phase – High Efficiency *continued*

HP	kW	RPM	NEMA Frame	Catalog Number	List Price	Mult. Symbol	Approx. Shipping Weight (lbs)	Service Factor	FL Amps @ High	FL. Eff (%)	"C" Dimension (in)	Voltage (V)	Notes
60	45	3600	326HP	06036EP3E326HP	8,221	P1F	661	1.25	69.0	93.0	31.897	208-230/460	15;30
		3600	364/5HP	06036EP3E364HP	9,032	P1F	984	1.25	69.0	93.0	33.684	208-230/460	15;30
		1800	326HP	06018EP3E326HP	7,641	P1F	686	1.25	71.0	93.6	31.897	208-230/460	15;30
		1800	364/5HP	06018EP3E364HP	8,119	P1F	946	1.25	68.6	93.6	33.684	208-230/460	15;30
75	55	3600	364/5HP	07536EP3E365HP	10,454	P1F	1039	1.25	82.5	93.0	33.684	208-230/460	15;30
		1800	364/5HP	07518EP3E365HP	8,907	P1F	1011	1.25	83.4	94.1	33.684	208-230/460	15;30
100	75	3600	404/5HP	10036EP3E405HP	12,293	P1F	1165	1.25	113	93.6	36.674	208-230/460	15;30
		3600	404/5HPH	10036EP3E405HPH	12,293	P1F	1327	1.25	113	93.6	36.674	208-230/460	15;30
		3600	404/5HP	10036EP3G405HP	12,293	P1F	1238	1.25	113	93.6	36.674	460	15;30
		3600	404/5HPH	10036EP3G405HPH	12,293	P1F	1327	1.25	113	93.6	36.674	460	15;30
		1800	404/5HP	10018EP3E405HP	10,688	P1F	1229	1.25	114	94.5	36.674	208-230/460	15;30
		1800	404/5HPH	10018EP3E405HPH	10,688	P1F	1337	1.25	114	94.5	36.674	208-230/460	15;30
		1800	404/5HP	10018EP3G405HP	10,688	P1F	1229	1.25	114	94.5	36.674	460	15;30
		1800	404/5HPH	10018EP3G405HPH	10,688	P1F	1229	1.25	114	94.5	36.674	460	15;30
125	90	3600	444/5HP	12536EP3G444HP	17,113	P1F	1788	1.15	136	94.5	40.012	460	15;30
		1800	444/5HP	12518EP3G444HP	14,940	P1F	1717	1.15	142	94.5	40.012	460	15;30
150	110	3600	444/5HP	15036EP3G445HP	19,540	P1F	1896	1.15	160	94.5	40.012	460	15;30
		1800	444/5HP	15018EP3G445HP	16,995	P1F	1885	1.15	167	95.0	40.012	460	15;30

Refer to electrical and mechanical data sections for additional technical information. Please refer to back cover for description of "NOTES"

For detailed specifications, data sheets, drawings and performance curves visit http://catalog.wegelectric.com

Data subject to change without notice.

IEC Tru-Metric™ Motors

GENERAL PURPOSE MOTORS

TEFC - Three-Phase

This line is designed and built according to European IEC34 and IEC79 standards.

Standard Features:

- 60 Hz (1.15 service factor) and 50 Hz (1.0 service factor)
- Class F insulation (Impregnation Resin and Magnet wire are class H)
- F2 mounted as standard (F1 convertible)
- Stainless Steel Nameplate - Laser etched with high contrast background
- Regreasable ball bearings (Frames 160 and up)
- Gasketed conduit box
- Class I, Div. 2, Groups A, B, C & D – T3, Class II, Div 2, Groups F & G – T3C (Cast Iron Frames only)
- Suitable for WYE/Delta Start (W and Y voltage code motors)

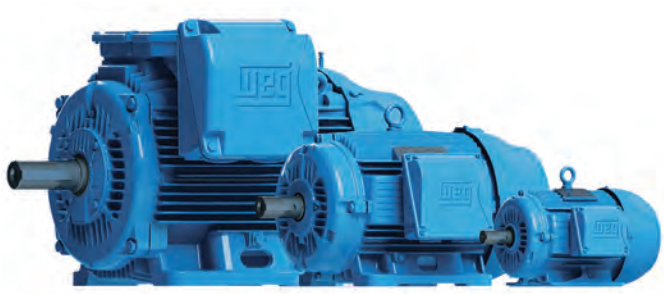

W22 Cast Iron



Aluminum

Features that make a difference:

- 1.25 service factor for 60 Hz operation (IE3)
- 1.15 service factor for 60 Hz operation (IE2)
- Optimized ventilation system for cooler operation and reduced noise levels
- Solid base for reduced vibration levels (Cast Iron Frames)
- Frames 225 and up can easily be F1 (B3L) converted by simply rotating the terminal box adapter or F3 by removing it
- Aluminum frames have removable feet for easy F1, F2 and F3 (B3L, B3R, B3T) conversion
- Terminal blocks

Inverter Rated (IE3):
1000:1 for variable torque
12:1 for constant torque

** IE2 is 10:1 VT and 4:1 CT*

ADDITIONAL TECHNICAL DATA

ELECTRICAL DATA: B-34 to B-48
MECHANICAL DATA: C-20 to C-26

SAFE AREA



TEFC – Foot Mount

HP	kW	RPM	NEMA Frame	Catalog Number	List Price	Mult. Symbol	Approx. Shipping Weight (lbs)	Service Factor	FL Amps @ High	FL. Eff (%)	"C" Dimension (in)	Voltage (V)	Notes
		3600	63	.1836EP3EAL63	280	T1	14	1.15	0.48	68.0	8.504	230/460//190/380	2;7
		1800	63	.1818EP3EAL63	267	T1	17	1.15	0.51	69.0	8.504	230/460//190/380	2;7
0.25	0.18	1200	71	.1812EP3EAL71	338	T1	22	1.15	0.77	61.0	9.764	230/460//190/380	2;7
		900/750	80	.1809EP3WAL80	540	T1	28	1.15	0.69	57.5	10.866	460//220-240/380-415	2;7;11
		900	80	.1809EP3EAL80	540	T1	30	1.15	0.80	50.5	10.866	230/460//190/380	2;7
		3600	63	.2536EP3EAL63	286	T1	15	1.15	0.62	70.0	8.504	230/460//190/380	2;7
		1800	71	.2518EP3EAL71	282	T1	24	1.15	0.68	73.0	9.764	230/460//190/380	2;7
0.33	0.25	1200	71	.2512EP3EAL71	363	T1	24	1.15	1.00	64.0	9.764	230/460//190/380	2;7
		900/750	80	.2509EP3WAL80	583	T1	32	1.15	0.91	59.5	10.866	460//220-240/380-415	2;7;11
		900	80	.2509EP3EAL80	583	T1	30	1.15	0.87	57.5	10.866	230/460//190/380	2;7
		3600	71	.3736EP3EAL71	309	T1	21	1.15	0.83	73.0	9.764	230/460//190/380	2;7
		1800	71	.3718EP3EAL71	290	T1	24	1.15	1.06	73.0	9.764	230/460//190/380	2;7
0.5	0.37	1200	80	.3712EP3EAL80	378	T1	28	1.15	1.07	64.0	10.866	230/460//190/380	2;7
		900/750	90S/L	.3709EP3WAL90S/L	662	T1	42	1.15	1.26	66.0	12.953	460//220-240/380-415	2;7;11
		900	90S	.3709EP3EAL90S	662	T1	39	1.15	1.35	61.5	12.953	230/460//190/380	2;7
		3600	71	.5536EP3EAL71	316	T1	23	1.15	1.14	76.0	9.764	230/460//190/380	2;7
		1800	80	.5518EP3EAL80	333	T1	28	1.15	1.25	77.0	10.866	230/460//190/380	2;7
0.75	0.55	1200	80	.5512EP3EAL80	405	T1	31	1.15	1.63	66.0	10.866	230/460//190/380	2;7
		900/750	90S/L	.5509EP3WAL90S/L	696	T1	58	1.15	1.66	68.0	12.953	460//220-240/380-415	2;7;11
		900	90L	.5509EP3EAL90L	696	T1	46	1.15	2.12	62.5	12.953	230/460//190/380	2;7
		3600/3000	80	.7536EP3WAL80	345	T1	27	1.15	1.42	79.0	10.866	460//220-240/380-415	2;7
		3600	80	.7536EP3EAL80	345	T1	28	1.15	1.42	79.0	10.866	230/460//190/380	2;7
		1800//1500	80	.7518EP3WAL80	339	T1	39	1.15	1.41	82.5	10.866	460//220-240/380-415	2;7
		1800	80	.7518EP3EAL80	339	T1	33	1.15	1.41	82.5	10.866	230/460//190/380	2;7
1	0.75	1000//1200	90S/L	.7512ET3EAL90S	537	T1	51	1.25	1.68	82.5	12.953	230/460//190/380	2;7
		1000//1200	90S/L	.7512ET3WAL90S	537	T1	49	1.25	1.68	82.5	12.953	460//220-240/380-415	2;7
		1000//1200	90S/L	E.7512EP3WAL90S/LF3	452	T1	40.4	1.00	1.92	76.4	12.953	220-240/380-415//440-460	2;8;11;27
		900/750	100L	.7509EP3WAL100L	756	T1	58	1.15	2.15	75.5	14.803	460//220-240/380-415	2;7;11
		900	100L	.7509EP3EAL100L	756	T1	57	1.15	2.31	74.0	14.803	230/460//190/380	2;7
		3600/3000	80	00136EP3WAL80	370	T1	30	1.15	2.07	82.5	10.866	460//220-240/380-415	2;7
		3600/3000	80	00136ET3EAL80	444	T1	30	1.25	2.03	84.0	10.866	230/460//190/380	2;7
		3600/3000	80	00136ET3WAL80	444	T1	30	1.25	2.03	84.0	10.866	460//220-240/380-415	2;7
		1800//1500	90S/L	00118ET3EAL90S	470	T1	43	1.25	2.05	86.5	12.953	230/460//190/380	2;7
		1800//1500	90S/L	00118ET3WAL90S	470	T1	43	1.25	2.05	86.5	12.953	460//220-240/380-415	2;7
1.5	1.1	1500//1800	90S/L	E00118EP3WAL90S/LF3	409	T1	43	1.00	2.36	82.1	12.953	220-240/380-415//440-460	2;8;11;27
		1000//1200	100L	00112ET3EAL100L	746	T1	67	1.25	2.31	85.5	14.803	230/460//190/380	2;7
		1000//1200	100L	00112ET3WAL100L	746	T1	58	1.25	2.31	85.5	14.803	460//220-240/380-415	2;7
		1000//1200	90S/L	E00112EP3WAL90S/LF3	649	T1	48.5	1.00	2.80	78.1	12.953	220-240/380-415//440-460	2;8;11;27
		900/750	100L	00109EP3WAL100L	767	T1	66	1.15	3.09	77.0	14.803	460//220-240/380-415	2;7;11

Continued on next page

Refer to electrical and mechanical data sections for additional technical information. Please refer to back cover for description of "NOTES"

For detailed specifications, data sheets, drawings and performance curves visit http://catalog.wegelectric.com

Data subject to change without notice.

TEFC – Foot Mount *continued*

HP	kW	RPM	NEMA Frame	Catalog Number	List Price	Mult. Symbol	Approx. Shipping Weight (lbs)	Service Factor	FL Amps @ High	FL. Eff (%)	"C" Dimension (in)	Voltage (V)	Notes
2	1.5	3600/3000	90S/L	00156ET3EAL90S	504	T1	42	1.25	2.69	85.5	12.953	230/460//190/380	2;7
		3600/3000	90S/L	00156ET3WAL90S	504	T1	42	1.25	2.69	85.5	12.953	460//220-240/380-415	2;7
		3000	90S/L	E00156EP3WAL90S/LF3	438	T1	38.6	1.00	3.08	82.5	12.953	220-240/380-415//440-460	2;8;11;27
		1800//1500	90S/L	00158ET3EAL90L	524	T1	48	1.25	2.79	86.5	12.953	230/460//190/380	2;7
		1800//1500	90S/L	00158ET3WAL90L	524	T1	48	1.25	2.79	86.5	12.953	460//220-240/380-415	2;7
		1800	90S/L	00158ET3HAL90L	524	T1	47	1.25	2.23	86.5	12.953	575	2;7
		1500//1800	90S/L	E00158EP3WAL90S/LF3	456	T1	48	1.00	3.22	83.1	12.953	220-240/380-415//440-460	2;8;11;27
		1000//1200	100L	00152ET3EAL100L	812	T1	75	1.25	3.15	86.5	14.803	230/460//190/380	2;7
		1000//1200	100L	00152ET3WAL100L	812	T1	67	1.25	3.15	86.5	14.803	460//220-240/380-415	2;7
		1000//1200	100L	E00152EP3WAL100LF3	706	T1	66.1	1.00	3.71	80.3	14.803	220-240/380-415//440-460	2;8;11;27
		900/750	112M	00159EP3YAL112M	870	T1	88	1.15	3.68	82.5	15.472	460//380-415/660-690	2;7;11
3	2.2	3600/3000	90S/L	00236ET3EAL90L	756	T1	44	1.25	3.85	86.5	12.953	230/460//190/380	2;7
		3600/3000	90S/L	00236ET3WAL90L	756	T1	44	1.25	3.85	86.5	12.953	460//220-240/380-415	2;7
		3000	90S/L	E00236EP3WAL90S/LF3	657	T1	46.3	1.00	4.56	83.9	12.953	220-240/380-415//440-460	2;8;11;27
		1800//1500	100L	00218ET3EAL100L	630	T1	68	1.25	4.05	87.5	14.803	230/460//190/380	2;7
		1800//1500	100L	00218ET3WAL100L	630	T1	68	1.25	4.05	87.5	14.803	460//220-240/380-415	2;7
		1500//1800	100L	E00218EP3WAL100LF3	548	T1	62.8	1.00	4.56	84.9	14.803	220-240/380-415//440-460	2;8;11;27
		1000//1200	132S	00212ET3EAL132S	1,166	T1	131	1.25	4.41	89.5	19.291	230/460//190/380	2;7
		1000//1200	132S	00212ET3YAL132S	1,166	T1	139	1.25	4.41	89.5	19.291	460//380-415/660-690	2;7
		1000//1200	112M	E00212EP3YAL112MF3	972	T1	76.5	1.00	5.23	82.4	15.472	380-415/660-690//440-460	2;8;11;27
		900/750	132S	00209EP3YAL132S	1,228	T1	127	1.15	4.70	84.0	19.291	460//380-415/660-690	2;7;11
4	3	3600/3000	100L	00336ET3EAL100L	805	T1	57	1.25	5.01	88.5	14.803	230/460//190/380	2;7
		3600/3000	100L	00336ET3WAL100L	805	T1	57	1.25	5.01	88.5	14.803	460//220-240/380-415	2;7
		3000	100L	E00336EP3WAL100LF3	700	T1	57.3	1.00	5.85	85.0	14.803	220-240/380-415//440-460	2;8;11;27
		1800//1500	100L	00318ET3EAL100L	672	T1	78	1.25	5.39	88.5	14.803	230/460//190/380	2;7
		1800//1500	100L	00318ET3WAL100L	672	T1	77	1.25	5.39	88.5	14.803	460//220-240/380-415	2;7
		1800	100L	00318ET3HAL100L	672	T1	77	1.25	4.31	88.5	14.803	575	2;7
		1500//1800	100L	E00318EP3WAL100LF3	584	T1	73.9	1.00	6.07	86.0	14.803	220-240/380-415//440-460	2;8;11;27
		1000//1200	132M	00312ET3EAL132M	1,247	T1	137	1.25	6.01	89.5	19.291	230/460//190/380	2;7
		1000//1200	132M	00312ET3YAL132M	1,247	T1	150	1.25	6.01	89.5	19.291	460//380-415/660-690	2;7
		1000//1200	132S	E00312EP3YAL132SF3	1,039	T1	112	1.00	7.34	83.6	19.291	380-415/660-690//440-460	2;8;11;27
		900/750	132M	00309EP3YAL132M	1,400	T1	161	1.15	6.31	84.0	19.291	460//380-415/660-690	2;7;11

Continued on next page

Refer to electrical and mechanical data sections for additional technical information. Please refer to back cover for description of "NOTES"

For detailed specifications, data sheets, drawings and performance curves visit http://catalog.wegelectric.com

SAFE AREA

TEFC – Foot Mount *continued*

HP	kW	RPM	NEMA Frame	Catalog Number	List Price	Mult. Symbol	Approx. Shipping Weight (lbs)	Service Factor	FL Amps @ High	FL. Eff (%)	"C" Dimension (in)	Voltage (V)	Notes
5.5	4	3600/3000	112M	00436ET3EAL112M	874	T1	88	1.25	6.67	88.5	15.472	230/460//190/380	2;7
		3600/3000	112M	00436ET3YAL112M	874	T1	86	1.25	6.67	88.5	15.472	460//380-415/660-690	2;7
		3000	112M	E00436EP3YAL112MF3	760	T1	72.8	1.00	7.59	86.3	15.472	380-415/660-690//440-460	2;8;11;27
		1800//1500	112M	00418ET3EAL112M	679	T1	94	1.25	7.10	89.5	15.472	230/460//190/380	2;7
		1800//1500	112M	00418ET3YAL112M	679	T1	94	1.25	7.10	89.5	15.472	460//380-415/660-690	2;7
		1500//1800	112M	E00418EP3YAL112MF3	590	T1	92.6	1.00	8.00	87.0	15.472	380-415/660-690//440-460	2;8;11;27
		1000//1200	132M	00412ET3EAL132M	1,254	T1	133	1.25	7.90	89.5	19.291	230/460//190/380	2;7
		1000//1200	132M	00412ET3YAL132M	1,254	T1	145	1.25	7.90	89.5	19.291	460//380-415/660-690	2;7
		1000//1200	132M	E00412EP3YAL132MF3	1,090	T1	143	1.00	9.50	84.9	19.291	380-415/660-690//440-460	2;8;11;27
		900/750	160M	00409EP3Y160M-W22	1,693	T1	256	1.15	8.29	86.5	23.543	460//380-415/660-690	7;11
7.5	5.5	3600/3000	132S	00536ET3EAL132S	1,144	T1	135	1.25	8.97	89.5	19.291	230/460//190/380	2;7
		3600/3000	132S	00536ET3YAL132S	1,144	T1	132	1.25	8.97	89.5	19.291	460//380-415/660-690	2;7
		3000	132S	E00536EP3YAL132SF3	995	T1	112	1.00	10.5	88.0	19.291	380-415/660-690//440-460	2;8;11;27
		1800//1500	132S	00518ET3EAL132S	932	T1	145	1.25	9.07	91.7	19.291	230/460//190/380	2;7
		1800//1500	132S	00518ET3YAL132S	932	T1	140	1.25	9.07	91.7	19.291	460//380-415/660-690	2;7
		1800	132S	00518ET3HAL132S	932	T1	140	1.25	7.26	91.7	19.291	575	2;7
		1500//1800	132S	E00518EP3YAL132SF3	810	T1	107	1.00	10.3	88.3	19.291	380-415/660-690//440-460	2;8;11;27
		1000//1200	160M	00512ET3E160M-W22	1,760	T1	276	1.25	9.48	91.0	23.543	230/460//190/380	7
		1000//1200	160M	00512ET3Y160M-W22	1,760	T1	289	1.25	9.48	91.0	23.543	460//380-415/660-690	7
		1000//1200	132M	E00512EP3YAL132MF3	1,504	T1	150	1.00	12.9	86.2	19.291	380-415/660-690//440-460	2;8;11;27
		900/750	160M	00509EP3Y160M-W22	1,951	T1	287	1.15	12.5	84.9	23.543	460//380-415/660-690	7;11
10	7.5	3600/3000	132S	00736ET3EAL132S	1,292	T1	146	1.25	12.3	90.2	19.291	230/460//190/380	2;7
		3600/3000	132S	00736ET3YAL132S	1,292	T1	145	1.25	12.3	90.2	19.291	460//380-415/660-690	2;7
		3000	132S	E00736EP3YAL132SF3	1,123	T1	123	1.00	13.8	88.7	19.291	380-415/660-690//440-460	2;8;11;27
		1800//1500	132M	00718ET3EAL132M	1,110	T1	162	1.25	12.2	91.7	19.291	230/460//190/380	2;7
		1800//1500	132M	00718ET3YAL132M	1,110	T1	157	1.25	12.2	91.7	19.291	460//380-415/660-690	2;7
		1800	132M	00718ET3HAL132M	1,110	T1	162	1.25	9.76	91.7	19.291	575	2;7
		1500//1800	132M	E00718EP3YAL132MF3	965	T1	122	1.00	13.9	89.4	19.291	380-415/660-690//440-460	2;8;11;27
		1000//1200	160M	00712ET3E160M-W22	2,306	T1	291	1.25	13.1	91.0	23.543	230/460//190/380	7
		1000//1200	160M	00712ET3Y160M-W22	2,306	T1	297	1.25	13.1	91.0	23.543	460//380-415/660-690	7
		1000//1200	160M	E00712EP3Y160MF3-W22	1,960	T1	249	1.00	14.7	88.5	23.543	380-415/660-690//440-460	8;11;27
		900/750	160L	00709EP3Y160L-W22	2,412	T1	328	1.15	15.0	88.5	25.276	460//380-415/660-690	7;11
15	11	3600/3000	160M	01136ET3Y160M-W22	2,102	T1	300	1.25	17.9	91.7	23.543	460//380-415/660-690	7
		3000	160M	E01136EP3Y160MF3-W22	1,787	T1	229	1.00	20.1	90.6	23.543	380-415/660-690//440-460	8;11;27
		1800//1500	160M	01118ET3Y160M-W22	1,726	T1	332	1.25	18.2	92.4	23.543	460//380-415/660-690	7
		1500//1800	160M	E01118EP3Y160MF3-W22	1,467	T1	232	1.00	20.9	90.3	23.543	380-415/660-690//440-460	8;11;27
		1000//1200	160L	01112ET3Y160L-W22	3,160	T1	346	1.25	18.8	91.7	25.276	460//380-415/660-690	7
		1000//1200	160L	E01112EP3Y160LF3-W22	2,686	T1	300	1.00	21.7	90.2	25.276	380-415/660-690//440-460	8;11;27
		900/750	180L	01109EP3Y180L-W22	3,505	T1	413	1.15	18.8	89.5	27.638	460//380-415/660-690	7;11
		900/750	200L	01509EP3Y200L-W22	4,485	T1	528	1.15	28.0	91.0	30.197	460//380-415/660-690	7;11

Continued on next page

Refer to electrical and mechanical data sections for additional technical information. Please refer to back cover for description of "NOTES"

For detailed specifications, data sheets, drawings and performance curves visit http://catalog.wegelectric.com

Data subject to change without notice.

TEFC – Foot Mount *continued*

HP	kW	RPM	NEMA Frame	Catalog Number	List Price	Mult. Symbol	Approx. Shipping Weight (lbs)	Service Factor	FL Amps @ High	FL. Eff (%)	"C" Dimension (in)	Voltage (V)	Notes
20	15	3600/3000	160M	01536ET3Y160M-W22	2,413	T1	316	1.25	24.4	91.7	23.543	460//380-415/660-690	7
		3000	160M	E01536EP3Y160MF3-W22	2,051	T1	247	1.00	27.2	91.4	23.543	380-415/660-690//440-460	8;11;27
		1800//1500	160L	01518ET3Y160L-W22	2,118	T1	379	1.25	25.0	93.0	25.276	460//380-415/660-690	7
		1500//1800	160L	E01518EP3Y160LF3-W22	1,800	T1	276	1.00	28.2	91.2	25.276	380-415/660-690//440-460	8;11;27
		1000//1200	180L	01512ET3Y180L-W22	3,884	T1	459	1.25	24.7	91.7	27.638	460//380-415/660-690	7
		1000//1200	180L	E01512EP3Y180LF3-W22	3,301	T1	384	1.00	27.1	90.6	27.638	380-415/660-690//440-460	8;11;27
25	18.5	3600/3000	160L	01836ET3Y160L-W22	2,925	T1	349	1.25	29.9	92.4	25.276	460//380-415/660-690	7
		3000	160L	E01836EP3Y160LF3-W22	2,486	T1	273	1.00	33.2	92.2	25.276	380-415/660-690//440-460	8;11;27
		1800//1500	180M	01818ET3Y180M-W22	2,689	T1	444	1.25	30.6	93.6	26.142	460//380-415/660-690	7
		1500//1800	180M	E01818EP3Y180MF3-W22	2,286	T1	362	1.00	34.7	91.7	26.142	380-415/660-690//440-460	8;11;27
		1000//1200	200L	01812ET3Y200L-W22	4,886	T1	556	1.25	30.8	93.0	30.197	460//380-415/660-690	7
		1000//1200	200L	E01812EP3Y200LF3-W22	4,153	T1	472	1.00	35.2	91.3	30.197	380-415/660-690//440-460	8;11;27
		900/750	225S/M	01809EP3Y225S/M-W22	5,270	T1	861	1.15	31.0	92.4	34.882	460//380-415/660-690	7;11
30	22	3600/3000	180M	02236ET3Y180M-W22	3,492	T1	435	1.25	34.7	92.4	26.142	460//380-415/660-690	7
		3000	180M	E02236EP3Y180MF3-W22	2,968	T1	362	1.00	38.1	92.4	26.142	380-415/660-690//440-460	8;11;27
		1800//1500	180L	02218ET3Y180L-W22	3,225	T1	484	1.25	36.0	93.6	27.638	460//380-415/660-690	7
		1500//1800	180L	E02218EP3Y180LF3-W22	2,741	T1	410	1.00	39.9	92.4	27.638	380-415/660-690//440-460	8;11;27
		1000//1200	200L	02212ET3Y200L-W22	4,924	T1	602	1.25	37.1	93.0	30.197	460//380-415/660-690	7
		1000//1200	200L	E02212EP3Y200LF3-W22	4,185	T1	496	1.00	41.8	91.6	30.197	380-415/660-690//440-460	8;11;27
		900/750	225S/M	02209EP3Y225S/M-W22	6,702	T1	903	1.15	36.9	92.4	34.882	460//380-415/660-690	7;11
40	30	3600/3000	200L	03036ET3Y200L-W22	4,877	T1	565	1.25	47.1	93.0	30.197	460//380-415/660-690	7
		3000	200L	E03036EP3Y200LF3-W22	4,145	T1	498	1.00	52.2	93.0	30.197	380-415/660-690//440-460	8;11;27
		1800//1500	200L	03018ET3Y200L-W22	4,312	T1	603	1.25	49.4	94.1	30.197	460//380-415/660-690	7
		1500//1800	200L	E03018EP3Y200LF3-W22	3,665	T1	490	1.00	55.5	92.9	30.197	380-415/660-690//440-460	8;11;27
		1000//1200	225S/M	03012ET3Y225S/M-W22	7,689	T1	1035	1.25	47.6	94.1	34.882	460//380-415/660-690	7
		1000//1200	225S/M	E03012EP3Y225SMF3-W2	6,744	T1	792	1.00	53.6	92.7	34.882	380-415/660-690//440-460	8;11;27
		900/750	250S/M	03009EP3Y250S/M-W22	7,909	T1	1075	1.15	49.1	92.4	37.992	460//380-415/660-690	7;11
50	37	3600/3000	200L	03736ET3Y200L-W22	5,487	T1	577	1.25	57.7	93.6	30.197	460//380-415/660-690	7
		3000	200L	E03736EP3Y200LF3-W22	4,664	T1	562	1.00	64.0	93.5	30.197	380-415/660-690//440-460	8;11;27
		1800//1500	225S/MFF	03718ET3Y225S/MFF-W2	7,774	T1	1053	1.25	58.5	94.5	34.882	460//380-415/660-690	7
		1800//1500	225S/M	03718ET3Y225S/M-W22	6,984	T1	1027	1.25	58.5	94.5	34.882	460//380-415/660-690	7
		1500//1800	225S/M	E03718EP3Y225SMF3-W2	5,936	T1	754	1.00	64.9	93.3	34.882	380-415/660-690//440-460	8;11;27
		1000//1200	250S/M	03712ET3Y250S/M-W22	9,947	T1	1242	1.25	58.8	94.1	37.992	460//380-415/660-690	7
		1000//1200	250S/M	E03712EP3Y250SMF3-W2	8,725	T1	966	1.00	65.0	93.2	37.992	380-415/660-690//440-460	8;11;27
		900/750	280S/M	03709EP3Y280S/M-W22	10,492	T1	1529	1.15	62.8	93.6	42.165	460//380-415/660-690	7;11

Continued on next page

Refer to electrical and mechanical data sections for additional technical information. Please refer to back cover for description of "NOTES"

For detailed specifications, data sheets, drawings and performance curves visit http://catalog.wegelectric.com

SAFE AREA

TEFC – Foot Mount *continued*

HP	kW	RPM	NEMA Frame	Catalog Number	List Price	Mult. Symbol	Approx. Shipping Weight (lbs)	Service Factor	FL Amps @ High	FL. Eff (%)	"C" Dimension (in)	Voltage (V)	Notes
		3600/3000	225S/M	04536ET3Y225S/M-W22	7,961	T1	1038	1.25	66.7	94.1	33.701	460//380-415/660-690	7
		3000	225S/M	E04536EP3Y225SMF3-W2	6,767	T1	785	1.00	75.8	93.8	33.701	380-415/660-690//440-460	8;11;27
		1800//1500	225S/M	04518ET3Y225S/M-W22	7,391	T1	1058	1.25	69.9	95.0	34.882	460//380-415/660-690	7
60	45	1500//1800	225S/M	E04518EP3Y225SMF3-W2	6,282	T1	800	1.00	79.5	93.7	34.882	380-415/660-690//440-460	8;11;27
		1000//1200	280S/M	04512ET3Y280S/M-W22	11,023	T1	1653	1.25	74.7	94.5	42.165	460//380-415/660-690	7
		1000//1200	280S/M	E04512EP3Y280SMF3-W2	9,669	T1	1314	1.00	83.7	93.5	42.165	380-415/660-690//440-460	8;11;27
		900	280S/M	04509EP3Y280S/M-W22	11,442	T1	1619	1.15	77.0	94.1	42.165	460//380-415/660-690	7;11
		3600/3000	250S/M	05536ET3Y250S/M-W22	9,847	T1	1246	1.25	80.3	94.5	37.992	460//380-415/660-690	7
		3000	250S/M	E05536EP3Y250SMF3-W2	8,373	T1	911	1.00	92.5	94.0	37.992	380-415/660-690//440-460	8;11;27
		1800//1500	250S/M	05518ET3Y250S/M-W22	8,961	T1	1241	1.25	85.1	95.4	37.992	460//380-415/660-690	7
75	55	1500//1800	250S/M	E05518EP3Y250SMF3-W2	7,617	T1	979	1.00	94.6	94.1	37.992	380-415/660-690//440-460	8;11;27
		1000//1200	280S/M	05512ET3Y280S/M-W22	13,622	T1	1752	1.25	90.2	94.5	42.165	460//380-415/660-690	7
		1000//1200	280S/M	E05512EP3Y280SMF3-W2	11,053	T1	1387	1.00	99.4	93.9	42.165	380-415/660-690//440-460	8;11;27
		900/750	315S/M	05509EP3Y315S/M-W22	13,731	T1	2030	1.15	91.7	94.1	50.157	460//380-415/660-690	7;11
		3600/3000	280S/M	07536ET3Y280S/M-W22	12,472	T1	1902	1.25	111	94.5	42.165	460//380-415/660-690	7
		3000	280S/M	E07536EP3Y280SMF3-W2	10,601	T1	1389	1.00	126	94.3	42.165	380-415/660-690//440-460	8;11;27
		1800//1500	280S/M	07518ET3Y280S/M-W22	12,353	T1	1896	1.25	116	95.4	42.165	460//380-415/660-690	7
100	75	1500//1800	280S/M	E07518EP3Y280SMF3-W2	10,500	T1	1409	1.00	130	94.4	42.165	380-415/660-690//440-460	8;11;27
		1000//1200	315S/M	07512ET3Y315S/M-W22	16,479	T1	2489	1.25	122	95.0	50.157	460//380-415/660-690	7
		1000//1200	315S/M	E07512EP3Y315SMF3-W2	14,007	T1	1846	1.00	137	94.2	50.157	380-415/660-690//440-460	8;11;27
		900/750	315S/M	07509EP3Y315S/M-W22	16,649	T1	2251	1.15	123	94.5	50.157	460//380-415/660-690	7;11
		3600/3000	280S/M	09036ET3Y280S/M-W22	16,720	T1	1989	1.25	132	95.0	42.165	460//380-415/660-690	7
		3000	280S/M	E09036EP3Y280SMF3-W2	14,212	T1	1440	1.00	151	94.5	42.165	380-415/660-690//440-460	8;11;27
		1800//1500	280S/M	09018ET3Y280S/M-W22	15,220	T1	2008	1.25	139	95.4	42.165	460//380-415/660-690	7
125	90	1500//1800	280S/M	E09018EP3Y280SMF3-W2	12,937	T1	1484	1.00	154	94.7	42.165	380-415/660-690//440-460	8;11;27
		1000//1200	315S/M	09012ET3Y315S/M-W22	19,448	T1	2689	1.25	146	95.4	50.157	460//380-415/660-690	7
		1000//1200	315S/M	E09012EP3Y315SMF3-W2	16,531	T1	1969	1.00	159	94.6	50.157	380-415/660-690//440-460	8;11;27
		900/750	315S/M	09009EP3Y315S/M-W22	19,007	T1	2403	1.15	148	94.5	50.157	460//380-415/660-690	7;11
		3600/3000	315S/M	11036ET3Y315S/M-W22	21,018	T1	2463	1.25	163	95.0	48.976	460//380-415/660-690	7
		3000	315S/M	E11036EP3Y315SMF3-W2	17,865	T1	1927	1.00	183	94.9	48.976	380-415/660-690//440-460	8;11;27
		1800//1500	280S/M	11018ET3Y280S/M-W22	17,078	T1	2260	1.25	170	95.8	42.165	460//380-415/660-690	7
150	110	1500//1800	315S/M	E11018EP3Y315SMF3-W2	15,990	T1	1956	1.00	192	95.0	50.157	380-415/660-690//440-460	8;11;27
		1000//1200	315S/M	11012ET3Y315S/M-W22	21,300	T1	2818	1.25	178	95.8	50.157	460//380-415/660-690	7
		1000//1200	315S/M	E11012EP3Y315SMF3-W2	18,105	T1	2130	1.00	194	94.9	50.157	380-415/660-690//440-460	8;11;27
		900/750	315L	11009EP3Y315L-W22	24,920	T1	2925	1.15	182	95.0	54.449	460//380-415/660-690	7;11

Continued on next page

Refer to electrical and mechanical data sections for additional technical information. Please refer to back cover for description of "NOTES"

For detailed specifications, data sheets, drawings and performance curves visit http://catalog.wegelectric.com

Data subject to change without notice.

TEFC – Foot Mount *continued*

HP	kW	RPM	NEMA Frame	Catalog Number	List Price	Mult. Symbol	Approx. Shipping Weight (lbs)	Service Factor	FL Amps @ High	FL. Eff (%)	"C" Dimension (in)	Voltage (V)	Notes
175	132	3600/3000	315S/M	13236ET3Y315S/M-W22	23,180	T1	2667	1.25	193	95.4	48.976	460//380-415/660-690	7
		3000	315S/M	E13236EP3Y315SMF3-W2	19,703	T1	2053	1.00	217	95.2	48.976	380-415/660-690//440-460	8;11;27
		1800//1500	315S/M	13218ET3Y315S/M-W22	19,732	T1	2803	1.25	203	96.2	50.157	460//380-415/660-690	7
		1500//1800	315S/M	E13218EP3Y315SMF3-W2	16,772	T1	2101	1.00	224	95.2	50.157	380-415/660-690//440-460	8;11;27
		1000//1200	315S/M	13212ET3Y315S/M-W22	19,079	T1	3019	1.25	214	95.8	50.157	460//380-415/660-690	7
		1000//1200	315S/M	E13212EP3Y315SMF3-W2	24,315	T1	2284	1.00	233	95.0	50.157	380-415/660-690//440-460	8;11;27
		900/750	315L	13209EP3Y315L-W22	30,078	T1	3163	1.15	217	95.4	54.449	460//380-415/660-690	7;11
200	150	3600/3000	315S/M	15036ET3Y315S/M-W22	26,249	T1	2758	1.25	219	95.4	48.976	460//380-415/660-690	7
		3000	315S/M	E15036EP3Y315SMF3-W2	22,312	T1	2073	1.00	253	94.8	48.976	380-415/660-690//440-460	8;11;27
		1800//1500	315S/M	15018ET3Y315S/M-W22	21,772	T1	2864	1.25	228	96.2	50.157	460//380-415/660-690	7
		1500//1800	315S/M	E15018EP3Y315SMF3-W2	18,506	T1	2168	1.00	254	95.4	50.157	380-415/660-690//440-460	8;11;27
		1000//1200	315L	15012ET3Y315L-W22	22,444	T1	3315	1.25	240	95.8	54.449	460//380-415/660-690	7
		1000//1200	355M/L	E15012EP3Y355MLF3-W2	28,480	T1	2955	1.00	291	95.0	50.157	380-415/660-690//440-460	8;11;27
250	185	3600/3000	315S/M	18536EP3Y315S/M-W22	23,687	T1	2624	1.15	270	95.4	53.268	460//380-415/660-690	7;11
		1800//1500	315S/M	18518EP3Y315S/M-W22	23,435	T1	2738	1.15	283	95.4	54.449	460//380-415/660-690	7;11
		1000//1200	315L	18512EP3Y315L-W22	38,854	T1	3176	1.15	293	95.4	54.449	460//380-415/660-690	7;11
300	220	3600/3000	315L	22036EP3Y315L-W22	39,475	T1	2890	1.15	322	95.4	53.268	460//380-415/660-690	7;11
		1800//1500	315L	22018EP3Y315L-W22	32,352	T1	3121	1.15	333	95.4	54.449	460//380-415/660-690	7;11
		1000//1200	315L	22012EP3Y315L-W22	41,020	T1	3756	1.15	349	95.4	54.449	460//380-415/660-690	7;11
350	260	1800//1500	355M/L	26018EP3Y355M/L-W22	39,072	T1	3525	1.15	401	95.8	58.346	460//380-415/660-690	7;11
		1000//1200	355M/L	26012EP3Y355M/L-W22	47,322	T1	4229	1.15	422	95.4	58.346	460//380-415/660-690	7;11
400	300	3600/3000	315L	30036EP3Y315L-W22	42,828	T1	3362	1.15	434	95.4	54.449	460//380-415/660-690	7;11
		1800//1500	355M/L	30018EP3Y355M/L-W22	53,832	T1	3614	1.15	462	95.8	58.346	460//380-415/660-690	7;11
450	330	1800//1500	355M/L	33018EP3Y355M/L-W22	57,640	T1	4185	1.15	503	95.8	58.46	460//380-415/660-690	7;11

Refer to electrical and mechanical data sections for additional technical information. Please refer to back cover for description of "NOTES"

For detailed specifications, data sheets, drawings and performance curves visit http://catalog.wegelectric.com

IEC Tru-Metric™ Motors

ATEX MOTORS – Non-Sparking

TEFC - Ex nA

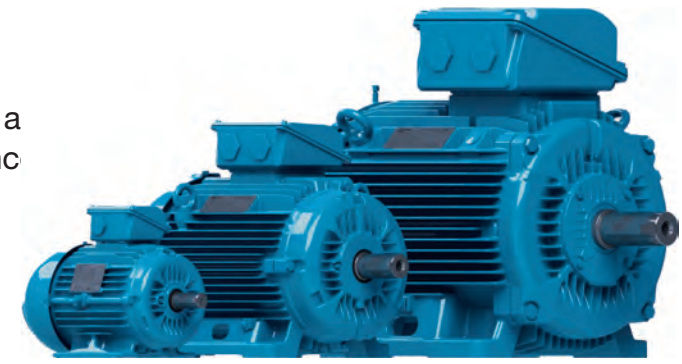

Ex nA motors do not require certification by a third party entity (a manufacturer's compliance declaration is sufficient). Nevertheless the Ex nA motors manufactured by WEG are certificated by Ex NB BASEEFA.

Standard Features:

- 50 Hz and and 60 Hz rated (1.00 service factor)
- Class F insulation (Impregnation Resin and magnet Wire are class H)
- F3 mounted as standard
- Stainless Steel Nameplate - Laser etched with high contrast background
- Regreasable ball bearings (Frames 160 and up)
- Gasketed conduit box
- Zone 2, Groups IIA, IIB and IIC
- Suitable for WYE/Delta Start
- Design N
- Conductive plastic fan (frames 63 up to 315)
- Aluminum fan (frame 355)

ADDITIONAL TECHNICAL DATA

ELECTRICAL DATA: B-82
MECHANICAL DATA: Contact WEG



ATEX MOTORS

TEFC – Ex nA

HP	kW	RPM	NEMA Frame	Catalog Number	List Price	Mult. Symbol	Approx. Shipping Weight (lbs)	Service Factor	FL Amps @ High	FL. Eff (%)	"C" Dimension (in)	Voltage (V)	Notes
		3000	63	E0.1836EP3WAX63F3-W2	364	XN	2073	1.00	0.51	63.6	8.504	220-240/380-415//440-460	8;11;27
0.25	0.18	1500	63	E0.1818EP3WAX63F3-W2	365	XN	2073	1.00	0.55	61.2	8.504	220-240/380-415//440-460	8;11;27
		1000	71	E0.1812EP3WAX71F3-W2	476	XN	2073	1.00	0.74	58.6	9.764	220-240/380-415//440-460	8;11;27
		3000	63	E0.2536EP3WAX63F3-W2	373	XN	2073	1.00	0.75	64.5	8.504	220-240/380-415//440-460	8;11;27
0.33	0.25	1500	71	E0.2518EP3WAX71F3-W2	415	XN	2073	1.00	0.76	66.5	9.764	220-240/380-415//440-460	8;11;27
		1000	71	E0.2512EP3WAX71F3-W2	483	XN	2073	1.00	1.08	59.7	9.764	220-240/380-415//440-460	8;11;27
		3000	71	E0.3736EP3WAX71F3-W2	408	XN	2073	1.00	0.88	71.2	9.764	220-240/380-415//440-460	8;11;27
0.5	0.37	1500	71	E0.3718EP3WAX71F3-W2	427	XN	2073	1.00	1.06	67.9	9.764	220-240/380-415//440-460	8;11;27
		1000	80	E0.3712EP3WAX80F3-W2	507	XN	2073	1.00	1.05	67.1	10.866	220-240/380-415//440-460	8;11;27
		3000	71	E0.5536EP3WAX71F3-W2	415	XN	2073	1.00	1.23	72.5	9.764	220-240/380-415//440-460	8;11;27
0.75	0.55	1500	80	E0.5518EP3WAX80F3-W2	488	XN	2073	1.00	1.29	74.1	10.866	220-240/380-415//440-460	8;11;27
		1000	80	E0.5512EP3WAX80F3-W2	523	XN	2073	1.00	1.50	70.9	10.866	220-240/380-415//440-460	8;11;27
		3000	80	.7536ET3WAX80F3-W22	659	XN	2073	1.00	1.61	82.1	10.866	220-240/380-415//440-460	8;11
		3000	80	E0.7536EP3WAX80F3-W2	499	XN	2073	1.00	1.56	79.5	10.866	220-240/380-415//440-460	8;11;27
1	0.75	1500	80	.7518ET3WAX80F3-W22	670	XN	2073	1.00	1.60	82.8	10.866	220-240/380-415//440-460	8;11
		1500	80	E0.7518EP3WAX80F3-W2	507	XN	2073	1.00	1.61	80.1	10.866	220-240/380-415//440-460	8;11;27
		1000	L90S	.7512ET3WAXL90SF3-W2	872	XN	2073	1.00	1.91	79.1	13.189	220-240/380-415//440-460	8;11
		1000	90S	E0.7512EP3WAX90SF3-W	660	XN	2073	1.00	1.92	76.4	11.969	220-240/380-415//440-460	8;11;27
		3000	80	00136ET3WAX80F3-W22	711	XN	2073	1.00	2.32	83.4	10.866	220-240/380-415//440-460	8;11
		3000	80	E00136EP3WAX80F3-W22	538	XN	2073	1.00	2.33	80.2	10.866	220-240/380-415//440-460	8;11;27
1.5	1.1	1500	90S	00118ET3WAX90SF3-W22	763	XN	2073	1.00	2.34	84.8	11.969	220-240/380-415//440-460	8;11
		1500	90S	E00118EP3WAX90SF3-W2	578	XN	2073	1.00	2.36	82.1	11.969	220-240/380-415//440-460	8;11;27
		1000	100L	00112ET3WAX100LF3-W2	924	XN	2073	1.00	2.68	81.5	14.803	220-240/380-415//440-460	8;11
		1000	90L	E00112EP3WAX90LF3-W2	700	XN	2073	1.00	2.80	78.1	12.953	220-240/380-415//440-460	8;11;27
		3000	90S	00156ET3WAX90SF3-W22	811	XN	2073	1.00	3.06	85.2	11.969	220-240/380-415//440-460	8;11
		3000	90S	E00156EP3WAX90SF3-W2	614	XN	2073	1.00	3.08	82.5	11.969	220-240/380-415//440-460	8;11;27
2	1.5	1500	90L	00158ET3WAX90LF3-W22	889	XN	2073	1.00	3.15	86.1	12.953	220-240/380-415//440-460	8;11
		1500	90L	E00158EP3WAX90LF3-W2	673	XN	2073	1.00	3.22	83.1	12.953	220-240/380-415//440-460	8;11;27
		1000	100L	00152ET3WAX100LF3-W2	1,152	XN	2073	1.00	3.71	82.8	14.803	220-240/380-415//440-460	8;11
		1000	100L	E00152EP3WAX100LF3-W	872	XN	2073	1.00	3.71	80.3	14.803	220-240/380-415//440-460	8;11;27
		3000	90L	00236ET3WAX90LF3-W2	924	XN	2073	1.00	4.37	86.5	12.953	220-240/380-415//440-460	8;11
		3000	90L	E00236EP3WAX90LF3-W2	700	XN	2073	1.00	4.56	83.9	12.953	220-240/380-415//440-460	8;11;27
3	2.2	1500	100L	00218ET3WAX100LF3-W2	1,116	XN	2073	1.00	4.50	87.2	14.803	220-240/380-415//440-460	8;11
		1500	100L	E00218EP3WAX100LF3-W	845	XN	2073	1.00	4.56	84.9	14.803	220-240/380-415//440-460	8;11;27
		1000//1200	112M	00212ET3YAX112MF3-W2	1,561	XN	96	1.00	5.16	84.7	15.472	380-415/660-690//440-460	8;11
		1000//1200	112M	E00212EP3YAX112MF3-W	1,181	XN	87	1.00	5.23	82.4	15.472	380-415/660-690//440-460	8;11;27

Continued on next page

Refer to electrical and mechanical data sections for additional technical information. Please refer to back cover for description of "NOTES"

For detailed specifications, data sheets, drawings and performance curves visit http://catalog.wegelectric.com

Data subject to change without notice.

ATEX MOTORS

TEFC – Ex nA *continued*

HP	kW	RPM	NEMA Frame	Catalog Number	List Price	Mult. Symbol	Approx. Shipping Weight (lbs)	Service Factor	FL Amps @ High	FL. Eff (%)	"C" Dimension (in)	Voltage (V)	Notes
4	3	3000	100L	00336ET3WAX100LF3-W2	1,210	XN	2073	1.00	5.68	87.4	14.803	220-240/380-415//440-460	8;11
		3000	100L	E00336EP3WAX100LF3-W	916	XN	2073	1.00	5.85	85.0	14.803	220-240/380-415//440-460	8;11;27
		1500	L100L	00318ET3WAXL100LF3-W	1,342	XN	2073	1.00	6.07	88.1	16.535	220-240/380-415//440-460	8;11
		1500	100L	E00318EP3WAX100LF3-W	1,016	XN	2073	1.00	6.07	86.0	14.803	220-240/380-415//440-460	8;11;27
		1000//1200	132S	00312ET3YAX132SF3-W2	2,225	XN	140	1.00	6.70	87.8	17.795	380-415/660-690//440-460	8;11
		1000//1200	132S	E00312EP3YAX132SF3-W	1,684	XN	140	1.00	7.34	83.6	17.795	380-415/660-690//440-460	8;11;27
5.5	4	3000	112M	00436ET3YAX112MF3-W2	1,552	XN	94	1.00	7.39	89.6	15.472	380-415/660-690//440-460	8;11
		3000	112M	E00436EP3YAX112MF3-W	1,174	XN	87	1.00	7.59	86.3	15.472	380-415/660-690//440-460	8;11;27
		1500//1800	112M	00418ET3YAX112MF3-W2	1,712	XN	100	1.00	7.89	89.3	15.472	380-415/660-690//440-460	8;11
		1500//1800	112M	E00418EP3YAX112MF3-W	1,388	XN	96	1.00	8.00	87.0	15.472	380-415/660-690//440-460	8;11;27
		1000//1200	132M	00412ET3YAX132MF3-W2	2,524	XN	151	1.00	9.02	86.9	19.291	380-415/660-690//440-460	8;11
		1000//1200	132M	E00412EP3YAX132MF3-W	1,910	XN	155	1.00	9.50	84.9	19.291	380-415/660-690//440-460	8;11;27
7.5	5.5	3000	132S	00536ET3YAX132SF3-W2	2,132	XN	148	1.00	10.0	90.1	17.795	380-415/660-690//440-460	8;11
		3000	132S	E00536EP3YAX132SF3-W	1,613	XN	137	1.00	10.5	88.0	17.795	380-415/660-690//440-460	8;11;27
		1500//1800	132S	00518ET3YAX132SF3-W2	2,218	XN	157	1.00	10.2	90.8	17.795	380-415/660-690//440-460	8;11
		1500//1800	132S	E00518EP3YAX132SF3-W	1,798	XN	162	1.00	10.3	88.3	17.795	380-415/660-690//440-460	8;11;27
		1000//1200	132M	E00512EP3YAX132MF3-W	2,312	XN	164	1.00	12.9	86.2	19.291	380-415/660-690//440-460	8;11;27
		1000	132M/L	00512ET3YAX132M/LF3W	3,052	XN	2073	1.00	12.6	88.0	20.276	380-415/660-690//440-460	8;11
10	7.5	3000	132S	00736ET3YAX132SF3-W2	2,422	XN	157	1.00	13.8	90.8	17.795	380-415/660-690//440-460	8;11
		3000	132S	E00736EP3YAX132SF3-W	1,833	XN	144	1.00	13.8	88.7	17.795	380-415/660-690//440-460	8;11;27
		1500//1800	132M	00718ET3YAX132MF3-W2	2,634	XN	177	1.00	13.5	91.7	19.291	380-415/660-690//440-460	8;11
		1500//1800	132M	E00718EP3YAX132MF3-W	2,135	XN	164	1.00	13.9	89.4	19.291	380-415/660-690//440-460	8;11;27
		1000//1200	160M	00712ET3YAX160MF3-W2	4,256	XN	289	1.00	14.5	90.8	23.543	380-415/660-690//440-460	8;11
		1000//1200	160M	E00712EP3YAX160MF3-W	3,221	XN	269	1.00	14.7	88.5	23.543	380-415/660-690//440-460	8;11;27
15	11	3000	160M	01136ET3YAX160MF3-W2	4,163	XN	274	1.00	19.9	92.8	23.543	380-415/660-690//440-460	8;11
		3000	160M	E01136EP3YAX160MF3-W	3,150	XN	249	1.00	20.1	90.6	23.543	380-415/660-690//440-460	8;11;27
		1500//1800	160M	01118ET3YAX160MF3-W2	4,108	XN	291	1.00	20.5	92.3	23.543	380-415/660-690//440-460	8;11
		1500//1800	160M	E01118EP3YAX160MF3-W	3,331	XN	252	1.00	20.9	90.3	23.543	380-415/660-690//440-460	8;11;27
		1000//1200	160L	01112ET3YAX160LF3-W2	5,607	XN	335	1.00	21.2	91.3	25.276	380-415/660-690//440-460	8;11
		1000//1200	160L	E01112EP3YAX160LF3-W	4,243	XN	320	1.00	21.7	89.3	25.276	380-415/660-690//440-460	8;11;27
20	15	3000	160M	01536ET3YAX160MF3-W2	4,490	XN	282	1.00	26.7	93.0	23.543	380-415/660-690//440-460	8;11
		3000	160M	E01536EP3YAX160MF3-W	3,398	XN	267	1.00	27.2	91.4	23.543	380-415/660-690//440-460	8;11;27
		1500//1800	160L	01518ET3YAX160LF3-W2	4,696	XN	340	1.00	28.0	93.0	25.276	380-415/660-690//440-460	8;11
		1500//1800	160L	E01518EP3YAX160LF3-W	3,622	XN	296	1.00	28.2	91.2	25.276	380-415/660-690//440-460	8;11;27
		1000//1200	180L	01512ET3YAX180LF3-W2	7,119	XN	453	1.00	26.6	92.3	27.638	380-415/660-690//440-460	8;11
		1000//1200	180L	E01512EP3YAX180LF3-W	5,388	XN	411	1.00	27.1	90.6	27.638	380-415/660-690//440-460	8;11;27

Continued on next page

Refer to electrical and mechanical data sections for additional technical information. Please refer to back cover for description of "NOTES"

For detailed specifications, data sheets, drawings and performance curves visit http://catalog.wegelectric.com

Data subject to change without notice.

TEFC – Ex nA *continued*

HP	kW	RPM	NEMA Frame	Catalog Number	List Price	Mult. Symbol	Approx. Shipping Weight (lbs)	Service Factor	FL Amps @ High	FL. Eff (%)	"C" Dimension (in)	Voltage (V)	Notes
25	18.5	3000	160L	01836ET3YAX160LF3-W2	5,233	XN	320	1.00	32.8	93.3	25.276	380-415/660-690//440-460	8;11
		3000	160L	E01836EP3YAX160LF3-W	3,960	XN	340	1.00	33.2	92.2	25.276	380-415/660-690//440-460	8;11;27
		1500//1800	180M	01818ET3YAX180MF3-W2	6,708	XN	424	1.00	34.4	93.4	26.142	380-415/660-690//440-460	8;11
		1500//1800	180M	E01818EP3YAX180MF3-W	5,439	XN	389	1.00	34.7	91.7	26.142	380-415/660-690//440-460	8;11;27
		1000//1200	200L	01812ET3YAX200LF3-W2	9,910	XN	522	1.00	34.7	92.6	30.197	380-415/660-690//440-460	8;11
		1000//1200	200L	E01812EP3YAX200LF3-W	7,499	XN	502	1.00	35.2	91.3	30.197	380-415/660-690//440-460	8;11;27
30	22	3000	180M	02236ET3YAX180MF3-W2	6,792	XN	415	1.00	37.9	93.8	26.142	380-415/660-690//440-460	8;11
		3000	180M	E02236EP3YAX180MF3-W	5,140	XN	389	1.00	38.1	92.4	26.142	380-415/660-690//440-460	8;11;27
		1500//1800	180L	02218ET3YAX180LF3-W2	7,319	XN	464	1.00	40.4	93.6	27.638	380-415/660-690//440-460	8;11
		1500//1800	180L	E02218EP3YAX180LF3-W	5,934	XN	437	1.00	39.9	92.4	27.638	380-415/660-690//440-460	8;11;27
		1000//1200	200L	02212ET3YAX200LF3-W2	10,539	XN	559	1.00	41.2	92.9	30.197	380-415/660-690//440-460	8;11
		1000//1200	200L	E02212EP3YAX200LF3-W	7,956	XN	526	1.00	41.8	91.6	30.197	380-415/660-690//440-460	8;11;27
40	30	3000	200L	03036ET3YAX200LF3-W2	9,931	XN	568	1.00	52.7	94.2	30.197	380-415/660-690//440-460	8;11
		3000	200L	E03036EP3YAX200LF3-W	7,515	XN	528	1.00	52.2	93.0	30.197	380-415/660-690//440-460	8;11;27
		1500//1800	200L	03018ET3YAX200LF3-W2	10,004	XN	566	1.00	55.4	94.2	30.197	380-415/660-690//440-460	8;11
		1500//1800	200L	E03018EP3YAX200LF3-W	7,716	XN	520	1.00	55.5	92.9	30.197	380-415/660-690//440-460	8;11;27
		1000//1200	225S/M	03012ET3YAX225SMF3-W	15,902	XN	998	1.00	52.7	94.2	34.882	380-415/660-690//440-460	8;11
		1000//1200	225S/M	E03012EP3YAX225SMF3W	12,034	XN	906	1.00	53.6	92.7	34.882	380-415/660-690//440-460	8;11;27
50	37	3000	200L	03736ET3YAX200LF3-W2	10,554	XN	614	1.00	64.7	94.7	30.197	380-415/660-690//440-460	8;11
		3000	200L	E03736EP3YAX200LF3-W	7,987	XN	592	1.00	64.0	93.5	30.197	380-415/660-690//440-460	8;11;27
		1500//1800	225S/M	03718ET3YAX225SMF3-W	13,553	XN	978	1.00	63.9	94.7	34.882	380-415/660-690//440-460	8;11
		1500//1800	225S/M	E03718EP3YAX225SMF3W	10,284	XN	868	1.00	64.9	93.3	34.882	380-415/660-690//440-460	8;11;27
		1000//1200	250S/M	03712ET3YAX250SMF3-W	17,736	XN	1192	1.00	64.8	94.6	37.992	380-415/660-690//440-460	8;11
		1000//1200	250S/M	E03712EP3YAX250SMF3W	13,422	XN	1086	1.00	65.0	93.2	37.992	380-415/660-690//440-460	8;11;27
60	45	3000	225S/M	04536ET3YAX225SMF3-W	16,634	XN	1010	1.00	74.6	95.3	33.701	380-415/660-690//440-460	8;11
		3000	225S/M	E04536EP3YAX225SMF3W	12,588	XN	899	1.00	75.8	93.8	33.701	380-415/660-690//440-460	8;11;27
		1500//1800	225S/M	04518ET3YAX225SMF3-W	15,411	XN	1040	1.00	78.6	94.8	34.882	380-415/660-690//440-460	8;11
		1500//1800	225S/M	E04518EP3YAX225SMF3W	11,696	XN	914	1.00	79.5	93.7	34.882	380-415/660-690//440-460	8;11;27
		1000//1200	280S/M	04512ET3YAX280SMF3-W	27,064	XN	1659	1.00	81.3	95.1	42.165	380-415/660-690//440-460	8;11
		1000//1200	280S/M	E04512EP3YAX280SMF3W	20,481	XN	1478	1.00	83.7	93.5	42.165	380-415/660-690//440-460	8;11;27
75	55	3000	250S/M	05536ET3YAX250SMF3-W	19,680	XN	1189	1.00	91.0	95.5	37.992	380-415/660-690//440-460	8;11
		3000	250S/M	E05536EP3YAX250SMF3W	14,893	XN	1031	1.00	92.5	94.0	37.992	380-415/660-690//440-460	8;11;27
		1500//1800	250S/M	05518ET3YAX250SMF3-W	18,916	XN	1238	1.00	94.4	95.4	37.992	380-415/660-690//440-460	8;11
		1500//1800	250S/M	E05518EP3YAX250SMF3W	14,354	XN	1099	1.00	94.6	94.1	37.992	380-415/660-690//440-460	8;11;27
		1000//1200	280S/M	05512ET3YAX280SMF3-W	27,355	XN	1758	1.00	99.0	95.4	42.165	380-415/660-690//440-460	8;11
		1000//1200	280S/M	E05512EP3YAX280SMF3W	20,781	XN	1551	1.00	99.4	93.9	42.165	380-415/660-690//440-460	8;11;27

Continued on next page

Refer to electrical and mechanical data sections for additional technical information. Please refer to back cover for description of "NOTES"

For detailed specifications, data sheets, drawings and performance curves visit http://catalog.wegelectric.com

ATEX MOTORS

TEFC – Ex nA *continued*

HP	kW	RPM	NEMA Frame	Catalog Number	List Price	Mult. Symbol	Approx. Shipping Weight (lbs)	Service Factor	FL Amps @ High	FL. Eff (%)	"C" Dimension (in)	Voltage (V)	Notes
100	75	3000	280S/M	07536ET3YAX280SMF3-W	26,996	XN	1767	1.00	121	95.7	42.165	380-415/660-690//440-460	8;11
		3000	280S/M	E07536EP3YAX280SMF3W	20,430	XN	1553	1.00	126	94.3	42.165	380-415/660-690//440-460	8;11;27
		1500//1800	280S/M	07518ET3YAX280SMF3-W	27,072	XN	1771	1.00	127	95.7	42.165	380-415/660-690//440-460	8;11
		1500//1800	280S/M	E07518EP3YAX280SMF3W	20,544	XN	1573	1.00	130	94.4	42.165	380-415/660-690//440-460	8;11;27
		1000//1200	315S/M	07512ET3YAX315SMF3-W	30,515	XN	2285	1.00	133	95.9	50.157	380-415/660-690//440-460	8;11
		1000//1200	315S/M	E07512EP3YAX315SMF3W	23,092	XN	2010	1.00	137	94.2	50.157	380-415/660-690//440-460	8;11;27
125	90	3000	280S/M	09036ET3YAX280SMF3-W	28,691	XN	1844	1.00	145	95.9	42.165	380-415/660-690//440-460	8;11
		3000	280S/M	E09036EP3YAX280SMF3W	21,712	XN	1604	1.00	151	94.5	42.165	380-415/660-690//440-460	8;11;27
		1500//1800	280S/M	09018ET3YAX280SMF3-W	28,077	XN	1877	1.00	154	95.9	42.165	380-415/660-690//440-460	8;11
		1500//1800	280S/M	E09018EP3YAX280SMF3W	21,307	XN	1648	1.00	154	94.7	42.165	380-415/660-690//440-460	8;11;27
		1000//1200	315S/M	09012ET3YAX315SMF3-W	35,779	XN	2475	1.00	159	96.2	50.157	380-415/660-690//440-460	8;11
		1000//1200	315S/M	E09012EP3YAX315SMF3W	27,076	XN	2133	1.00	159	94.6	50.157	380-415/660-690//440-460	8;11;27
150	110	3000	315S/M	11036ET3YAX315SMF3-W	34,547	XN	2285	1.00	181	96.1	48.976	380-415/660-690//440-460	8;11
		3000	315S/M	E11036EP3YAX315SMF3W	26,144	XN	2091	1.00	183	94.9	48.976	380-415/660-690//440-460	8;11;27
		1500//1800	315S/M	11018ET3YAX315SMF3-W	35,670	XN	2391	1.00	187	96.3	50.157	380-415/660-690//440-460	8;11
		1500//1800	315S/M	E11018EP3YAX315SMF3W	27,068	XN	2120	1.00	192	95.0	50.157	380-415/660-690//440-460	8;11;27
		1000//1200	315S/M	11012ET3YAX315SMF3-W	45,413	XN	2603	1.00	194	96.3	50.157	380-415/660-690//440-460	8;11
		1000//1200	315S/M	E11012EP3YAX315SMF3W	34,367	XN	2294	1.00	194	94.9	50.157	380-415/660-690//440-460	8;11;27
175	132	3000	315S/M	13236ET3YAX315SMF3-W	39,500	XN	2475	1.00	212	96.4	48.976	380-415/660-690//440-460	8;11
		3000	315S/M	E13236EP3YAX315SMF3W	29,862	XN	2217	1.00	217	95.2	48.976	380-415/660-690//440-460	8;11
		1500//1800	315S/M	13218ET3YAX315SMF3-W	42,877	XN	2578	1.00	224	96.4	50.157	380-415/660-690//440-460	8;11
		1500//1800	315S/M	E13218EP3YAX315SMF3W	31,689	XN	2265	1.00	224	95.2	50.157	380-415/660-690//440-460	8;11
		1000//1200	315S/M	13212ET3YAX315SMF3-W	76,749	XN	2788	1.00	235	96.3	50.157	380-415/660-690//440-460	8;11
		1000//1200	315S/M	E13212EP3YAX315SMF3W	52,853	XN	2448	1.00	233	95.0	50.157	380-415/660-690//440-460	8;11
200	150	3000	315S/M	15036ET3YAX315S/MF3W	41,396	XN	2073	1.00	245	95.6	48.976	380-415/660-690//440-460	8;11
		3000	315S/M	E15036EP3YAX315SMF3W	31,360	XN	2073	1.00	253	94.8	48.976	220-240/380-415//440-460	8;11;27
		1500	315S/M	15018ET3YAX315S/MF3W	43,938	XN	2073	1.00	259	96.00	50.157	380-415/660-690//440-460	8;11
		1500	315S/M	E15018EP3YAX315SMF3W	33,286	XN	2073	1.00	254	95.4	50.157	220-240/380-415//440-460	8;11;27
		1000	315L	15012ET3YAX315LF3-W2	82,712	XN	2073	1.00	264	96.4	54.449	380-415/660-690//440-460	8;11
		1000	355M/L	E15012EP3YAX355MLF3W	62,660	XN	2073	1.00	291	95.0	58.346	220-240/380-415//440-460	8;11;27

Continued on next page

Refer to electrical and mechanical data sections for additional technical information. Please refer to back cover for description of "NOTES"

For detailed specifications, data sheets, drawings and performance curves visit http://catalog.wegelectric.com

Data subject to change without notice.

TEFC – Ex nA *continued*

HP	kW	RPM	NEMA Frame	Catalog Number	List Price	Mult. Symbol	Approx. Shipping Weight (lbs)	Service Factor	FL Amps @ High	FL. Eff (%)	"C" Dimension (in)	Voltage (V)	Notes
220	160	3000	315S/M	16036EP3YAX315SMF3-W	38,870	XN	2358	1.00	262	95.3	48.976	380-415/660-690//440-460	8;11
		3000	315S/M	16036ET3YAX315SMF3-W	51,363	XN	2653	1.00	253	96.7	48.976	380-415/660-690//440-460	8;11
		1500//1800	315S/M	16018EP3YAX315SMF3-W	36,046	XN	2395	1.00	271	95.4	50.157	380-415/660-690//440-460	8;11
		1500//1800	315S/M	16018ET3YAX315SMF3-W	47,534	XN	2704	1.00	268	96.6	50.157	380-415/660-690//440-460	8;11
		1000//1200	315L	16012EP3YAX315LF3-W2	60,176	XN	2890	1.00	282	95.2	54.449	380-415/660-690//440-460	8;11
		1000//1200	355M/L	16012EP3YAX355MLF3-W	65,792	XN	3488	1.00	290	96.0	58.346	380-415/660-690//440-460	8;11
		1000//1200	315L	16012ET3YAX315LF3-W2	79,990	XN	3375	1.00	282	96.4	54.449	380-415/660-690//440-460	8;11
		1000//1200	355M/L	16012ET3YAX355MLF3-W	86,940	XN	3799	1.00	294	95.7	58.346	380-415/660-690//440-460	8;11
270	200	3000	355M/L	20036EP3YAX355MLF3-W	66,531	XN	3563	1.00	320	95.6	55.591	380-415/660-690//440-460	8;11
		1500//1800	355M/L	20018EP3YAX355MLF3-W	64,081	XN	3380	1.00	346	95.6	58.346	380-415/660-690//440-460	8;11
		1500//1800	315L	20018ET3YAX315LF3-W2	70,770	XN	3119	1.00	335	96.7	54.449	380-415/660-690//440-460	8;11
		1500//1800	355M/L	20018ET3YAX355MLF3-W	76,925	XN	3580	1.00	343	96.7	58.346	380-415/660-690//440-460	8;11
		1000//1200	315L	20012EP3YAX315LF3-W2	66,948	XN	3463	1.00	356	95.4	54.449	380-415/660-690//440-460	8;11
		1000//1200	355M/L	20012EP3YAX355MLF3-W	74,007	XN	3907	1.00	368	95.7	58.346	380-415/660-690//440-460	8;11
		1000//1200	355M/L	20012ET3YAX355MLF3-W	97,795	XN	4118	1.00	366	96.2	58.346	380-415/660-690//440-460	8;11
340	250	3000	315L	25036EP3YAX315LF3-W2	73,948	XN	3084	1.00	400	95.6	53.268	380-415/660-690//440-460	8;11
		3000	355M/L	25036EP3YAX355MLF3-W	82,191	XN	3887	1.00	392	96.4	55.591	380-415/660-690//440-460	8;11
		1500//1800	315L	25018EP3YAX315LF3-W2	62,457	XN	3267	1.00	417	95.9	54.449	380-415/660-690//440-460	8;11
		1500//1800	355M/L	25018EP3YAX355MLF3-W	67,456	XN	3525	1.00	432	95.8	58.346	380-415/660-690//440-460	8;11
		1500//1800	315L	25018ET3YAX315LF3-W2	76,550	XN	3549	1.00	422	96.9	54.449	380-415/660-690//440-460	8;11
		1500//1800	355M/L	25018ET3YAX355MLF3-W	83,195	XN	3858	1.00	427	96.9	58.346	380-415/660-690//440-460	8;11
		1000//1200	355M/L	25012EP3YAX355MLF3-W	88,256	XN	4229	1.00	461	95.5	58.346	380-415/660-690//440-460	8;11
		1000//1200	355M/L	25012ET3YAX355MLF3-W	111,338	XN	4628	1.00	457	96.3	58.346	380-415/660-690//440-460	8;11

Refer to electrical and mechanical data sections for additional technical information. Please refer to back cover for description of “NOTES”

For detailed specifications, data sheets, drawings and performance curves visit http://catalog.wegelectric.com

IEC Tru-Metric™ Motors

ATEX MOTORS – Explosion Proof



TEFC - Ex d

- 50 Hz and and 60 Hz rated (1.00 service factor)
- Class F insulation (Impregnation Resin and magnet Wire are class H)
- F3 mounted as standard
- Stainless Steel Nameplate - Laser etched with high contrast background
- Regreasable ball bearings (Frames 225 and up)
- Gasketed conduit box
- Zone 1 and 2, Groups IIA and IIB, class of temperature T4
- Suitable for WYE/Delta Start
- Design N
- Conductive plastic fan (frames 63 up to 315)
- Aluminum fan (frame 355)
- Lip Seal on both endshields
- Thermistors 1 per phase

TEFC – Ex d – IE2

HP	kW	RPM	NEMA Frame	Catalog Number	List Price	Mult. Symbol	Approx. Shipping Weight (lbs)	Service Factor	FL Amps @ High	FL. Eff (%)	"C" Dimension (in)	Voltage (V)	Notes
1	0.75	3000	90S	E.7536XP3WAX90SF3	1,267	XD	67.3	1.00	1.58	80.0	12.441	220-240/380-415//440-460	8;11;27
		1500//1800	90S	E.7518XP3WAX90SF3	1,283	XD	77	1.00	1.72	80.0	12.441	220-240/380-415//440-460	8;11;27
		1000//1200	90L	E.7512XP3WAX90LF3	1,199	XD	74.3	1.00	1.92	76.5	13.425	220-240/380-415//440-460	8;11;27
1.5	1.1	3000	90S	E00136XP3WAX90SF3	1,318	XD	67.3	1.00	2.25	81.5	12.441	220-240/380-415//440-460	8;11;27
		1500//1800	90L	E00118XP3WAX90LF3	1,334	XD	74.3	1.00	2.37	82.5	13.425	220-240/380-415//440-460	8;11;27
		1000//1200	90L	E00112XP3WAX90LF3	1,588	XD	74.3	1.00	3.06	78.1	13.425	220-240/380-415//440-460	8;11;27
2	1.5	3000	90S	E00156XP3WAX90SF3	1,371	XD	59.5	1.00	3.06	84.2	12.441	220-240/380-415//440-460	8;11;27
		1500//1800	100L	E00158XP3WAX100LF3	1,488	XD	101	1.00	3.15	83.5	15.118	220-240/380-415//440-460	8;11;27
		1000//1200	100L	E00152XP3WAX100LF3	1,757	XD	101	1.00	3.77	80.5	15.118	220-240/380-415//440-460	8;11;27
3	2.2	3000	90L	E00236XP3WAX90LF3	1,534	XD	50.7	1.00	4.49	84.2	13.425	220-240/380-415//440-460	8;11;27
		1500//1800	100L	E00218XP3WAX100LF3	1,783	XD	111	1.00	4.60	85.0	15.118	220-240/380-415//440-460	8;11;27
		1000//1200	112M	E00212XP3YAX112MF3	2,040	XD	126	1.00	5.20	81.8	15.512	380-415/660-690//440-460	8;11;27
4	3	3000	100L	E00336XP3WAX100LF3	1,918	XD	92.6	1.00	5.51	87.1	15.118	220-240/380-415//440-460	8;11;27
		1500//1800	112M	E00318XP3YAX112MF3	2,137	XD	137	1.00	6.12	86.0	15.512	380-415/660-690//440-460	8;11;27
		1000//1200	132S	E00312XP3YAX132SF3	3,224	XD	180	1.00	6.70	85.0	17.756	380-415/660-690//440-460	8;11;27
5.5	4	3000	112M	E00436XP3YAX112MF3	2,414	XD	132	1.00	7.31	87.5	15.512	380-415/660-690//440-460	8;11;27
		1500//1800	112M	E00418XP3YAX112MF3	2,468	XD	147	1.00	8.22	87.2	15.512	380-415/660-690//440-460	8;11;27
		1000//1200	132M	E00412XP3YAX132MF3	3,607	XD	202	1.00	8.62	85.5	19.252	380-415/660-690//440-460	8;11;27
7.5	5.5	3000	132S	E00536XP3YAX132SF3	3,083	XD	188	1.00	10.1	88.0	17.756	380-415/660-690//440-460	8;11;27
		1500//1800	132S	E00518XP3YAX132SF3	3,025	XD	184	1.00	10.6	89.2	17.756	380-415/660-690//440-460	8;11;27
		1000//1200	132M	E00512XP3YAX132MF3	3,800	XD	219	1.00	12.1	86.1	19.252	380-415/660-690//440-460	8;11;27
10	7.5	3000	132S	E00736XP3YAX132SF3	3,556	XD	179	1.00	14.2	88.8	17.756	380-415/660-690//440-460	8;11;27
		1500//1800	132M	E00718XP3YAX132MF3	3,685	XD	224	1.00	13.8	89.5	19.252	380-415/660-690//440-460	8;11;27
		1000//1200	160M	E00712XP3YAX160MF3	5,017	XD	333	1.00	14.7	88.8	23.543	380-415/660-690//440-460	8;11;27
15	11	3000	160M	E01136XP3YAX160MF3	4,148	XD	334	1.00	20.0	90.8	23.543	380-415/660-690//440-460	8;11;27
		1500//1800	160M	E01118XP3YAX160MF3	4,151	XD	342	1.00	20.7	90.6	23.543	380-415/660-690//440-460	8;11;27
		1000//1200	160L	E01112XP3YAX160LF3	5,281	XD	375	1.00	22.3	89.6	25.669	380-415/660-690//440-460	8;11;27
20	15	3000	160M	E01536XP3YAX160MF3	4,924	XD	334	1.00	26.4	91.0	23.543	380-415/660-690//440-460	8;11;27
		1500//1800	160L	E01518XP3YAX160LF3	4,608	XD	364	1.00	28.1	91.2	25.669	380-415/660-690//440-460	8;11;27
		1000//1200	180L	E01512XP3YAX180LF3	6,436	XD	512	1.00	26.8	89.8	27.638	380-415/660-690//440-460	8;11;27
25	18.5	3000	160L	E01836XP3YAX160LF3	5,915	XD	392	1.00	32.8	91.3	25.669	380-415/660-690//440-460	8;11;27
		1500//1800	180M	E01818XP3YAX180MF3	6,059	XD	490	1.00	34.5	92.4	26.142	380-415/660-690//440-460	8;11;27
		1000//1200	200L	E01812XP3YAX200LF3	8,379	XD	617	1.00	34.6	91.5	30.197	380-415/660-690//440-460	8;11;27
30	22	3000	180M	E02236XP3YAX180MF3	7,099	XD	480	1.00	38.3	92.0	26.142	380-415/660-690//440-460	8;11;27
		1500//1800	180L	E02218XP3YAX180LF3	6,706	XD	478	1.00	41.1	92.5	27.638	380-415/660-690//440-460	8;11;27
		1000//1200	200L	E02212XP3YAX200LF3	9,487	XD	529	1.00	41.2	92.0	30.197	380-415/660-690//440-460	8;11;27

Continued on next page

Refer to electrical and mechanical data sections for additional technical information. Please refer to back cover for description of "NOTES"

For detailed specifications, data sheets, drawings and performance curves visit http://catalog.wegelectric.com

ATEX MOTORS

TEFC – Ex d – IE2 *continued*

HP	kW	RPM	NEMA Frame	Catalog Number	List Price	Mult. Symbol	Approx. Shipping Weight (lbs)	Service Factor	FL Amps @ High	FL. Eff (%)	"C" Dimension (in)	Voltage (V)	Notes
40	30	3000	200L	E03036XP3YAX200LF3	8,824	XD	647	1.00	51.6	93.0	30.197	380-415/660-690//440-460	8;11;27
		1500//1800	200L	E03018XP3YAX200LF3	8,717	XD	684	1.00	54.9	93.2	30.197	380-415/660-690//440-460	8;11;27
		1000//1200	225S/M	E03012XP3YAX225SMF3	12,936	XD	937	1.00	53.1	92.6	33.425	380-415/660-690//440-460	8;11;27
50	37	3000	200L	E003736XP3YAX200LF3	10,812	XD	573	1.00	63.3	94.6	30.197	380-415/660-690//440-460	8;11;27
		1500//1800	225S/M	E03718XP3YAX225SMF3	11,099	XD	1018	1.00	63.7	93.6	33.425	380-415/660-690//440-460	8;11;27
		1000//1200	250S/M	E03712XP3YAX250SMF3	15,176	XD	1103	1.00	67.4	93.1	36.339	380-415/660-690//440-460	8;11;27
60	45	3000	225S/M	E04536XP3YAX225SMF3	17,255	XD	1017	1.00	75.1	93.7	33.425	380-415/660-690//440-460	8;11;27
		1500//1800	225S/M	E04518XP3YAX225SMF3	12,846	XD	970	1.00	76.1	93.8	33.425	380-415/660-690//440-460	8;11;27
		1000//1200	280S/M	E04512XP3YAX280SMF3	21,544	XD	1625	1.00	83.2	93.5	40.787	380-415/660-690//440-460	8;11;27
75	55	3000	250S/M	E05536XP3YAX250SMF3	21,608	XD	1131	1.00	91.5	94.0	36.339	380-415/660-690//440-460	8;11;27
		1500//1800	250S/M	E05518XP3YAX250SMF3	19,034	XD	1226	1.00	91.8	94.0	36.339	380-415/660-690//440-460	8;11;27
		1000//1200	280S/M	E05512XP3YAX280SMF3	27,320	XD	1704	1.00	100	93.7	40.787	380-415/660-690//440-460	8;11;27
100	75	3000	280S/M	E07536XP3YAX280SMF3	30,248	XD	1854	1.00	124	94.5	40.787	380-415/660-690//440-460	8;11;27
		1500//1800	280S/M	E07518XP3YAX280SMF3	23,986	XD	1852	1.00	126	94.8	40.787	380-415/660-690//440-460	8;11;27
		1000//1200	315S/M	E07512XP3YAX315SMF3	31,133	XD	1599	1.00	133	94.1	45.512	380-415/660-690//440-460	8;11;27
125	90	3000	280S/M	E09036XP3YAX280SMF3	36,063	XD	1934	1.00	149	94.8	40.787	380-415/660-690//440-460	8;11;27
		1500//1800	280S/M	E09018XP3YAX280SMF3	33,209	XD	2060	1.00	151	94.8	40.787	380-415/660-690//440-460	8;11;27
		1000//1200	315S/M	E09012XP3YAX315SMF3	40,124	XD	2271	1.00	161	94.4	45.512	380-415/660-690//440-460	8;11;27
150	110	3000	315S/M	E11036XP3YAX315SMF3	42,763	XD	2205	1.00	182	95.0	45.512	380-415/660-690//440-460	8;11;27
		1500//1800	315S/M	E11018XP3YAX315SMF3	37,846	XD	2426	1.00	184	95.2	45.512	380-415/660-690//440-460	8;11;27
		1000//1200	315S/M	E11012XP3YAX315SMF3	48,658	XD	2569	1.00	194	94.6	45.512	380-415/660-690//440-460	8;11;27
175	132	3000	315S/M	E13236XP3YAX315SMF3	54,064	XD	2337	1.00	215	95.3	45.512	380-415/660-690//440-460	8;11;27
		1500//1800	315S/M	E13218XP3YAX315SMF3	45,939	XD	2624	1.00	221	95.3	45.512	380-415/660-690//440-460	8;11;27
		1000//1200	355M/L	E13212XP3YAX355MLF3	82,346	XD	3749	1.00	240	95.2	57.835	380-415/660-690//440-460	8;11;27
220	160	3000	315S/M	16036XP3YAX315SMF3	67,306	XD	2567	1.00	260	95.4	45.512	380-415/660-690//440-460	8;11
		1500//1800	315S/M	16018XP3YAX315SMF3	50,129	XD	2668	1.00	270	95.4	45.512	380-415/660-690//440-460	8;11
		1000//1200	355M/L	16012XP3YAX355MLF3	90,159	XD	3969	1.00	290	95.4	57.835	380-415/660-690//440-460	8;11
270	200	3000	355M/L	20036XP3YAX355MLF3	100,962	XD	4035	1.00	320	95.1	57.835	380-415/660-690//440-460	8;11
		1500//1800	355M/L	20018XP3YAX355MLF3	80,905	XD	4006	1.00	333	96.0	57.835	380-415/660-690//440-460	8;11
		1000//1200	355M/L	20012XP3YAX355MLF3	110,130	XD	4212	1.00	368	95.4	57.835	380-415/660-690//440-460	8;11
340	250	3000	355M/L	25036XP3YAX355MLF3	111,375	XD	4348	1.00	392	95.7	57.835	380-415/660-690//440-460	8;11
		1500//1800	355M/L	25018XP3YAX355MLF3	94,903	XD	4236	1.00	415	95.8	57.835	380-415/660-690//440-460	8;11
		1000//1200	355M/L	25012XP3YAX355MLF3	133,308	XD	4818	1.00	452	95.6	57.835	380-415/660-690//440-460	8;11
430	315	1500//1800	355M/L	31518XP3YAX355MLF3	108,540	XD	4844	1.00	516	95.9	57.835	380-415/660-690//440-460	8;11;27

Refer to electrical and mechanical data sections for additional technical information. Please refer to back cover for description of "NOTES"

For detailed specifications, data sheets, drawings and performance curves visit http://catalog.wegelectric.com

Data subject to change without notice.

Farm Duty Motors

WEG offers a complete line of TEFC Farm Duty motors providing high starting torque for the most demanding applications. Standard features such as v-rings provide versatility for indoor and outdoor applications. Overload protection available in all frames protects the motor from extreme overloads and offers maximum safety to operators.

General Purpose - TEFC

- Double shielded ball bearings
- Insulation class B (Frame 56 - 145T)
- Insulation class F with class B temperature rise (Frame W182T and up)
- NPT threaded terminal box
- Start capacitor and run capacitor (2 HP and up)
- High starting Torque
- Manual Reset Thermal Overload Protector

Poultry Fan - TEAO

- Double shielded ball bearings
- Insulation class B
- Automatic Reset Thermal Overload Protector

Auger Drive - TEFC

- Double shielded ball bearings
- Two bolts mounting NEMA 'N' flange
- Extended shaft (NDE) with wrench flat for manual jogging of auger
- Centrifugal start switch protected against auger drive overspeed
- Manual Reset Thermal Overload Protector



Rolled Steel

ADDITIONAL TECHNICAL DATA
ELECTRICAL DATA: B-71
MECHANICAL DATA: C-53



Cast Iron

ADDITIONAL TECHNICAL DATA
ELECTRICAL DATA: B-71
MECHANICAL DATA: C-52



Poultry Fan

ADDITIONAL TECHNICAL DATA
ELECTRICAL DATA: B-72
MECHANICAL DATA: Contact WEG



Auger Drive

ADDITIONAL TECHNICAL DATA
ELECTRICAL DATA: B-72
MECHANICAL DATA: C-54

Farm Duty Motors

TEFC – Single-Phase – General Purpose – Foot Mount





HP	kW	RPM	NEMA Frame	Catalog Number	List Price	Mult. Symbol	Approx. Shipping Weight (lbs)	Service Factor	FL Amps @ High	FL. Eff (%)	"C" Dimension (in)	Voltage (V)	Notes
0.33	0.25	1800	B56	.3318ES1RFDB56	284	R1	23	1.15	2.80	61.0	11.102	115/230	4;9
0.5	0.37	1800	B56	.5018ES1RFDB56	308	R1	25	1.15	3.70	66.5	11.102	115/230	4;9
0.75	0.55	1800	B56	.7518ES1RFDB56	357	R1	28	1.15	5.30	68.5	11.102	115/230	4;9
1	0.75	1800	F143/5T	00118ES1RFD143T	400	R1	42	1.15	7.00	70.3	13.839	115/230	4;9
		1800	D56	00118ES1RFDD56	394	R1	36	1.15	7.00	70.3	12.283	115/230	4;9
1.5	1.1	1800	G143/5T	00158ES1RFD145T	504	R1	50	1.15	8.70	76.5	14.233	115/230	4;9
		1800	F56H	00158ES1RFDF56H	502	R1	51	1.15	8.70	76.5	13.464	115/230	4;9
2	1.5	1800	G143/5T	00218ES1RFD145T	578	R1	57	1.15	10.5	78.1	14.233	115/230	4;9
		1800	W182/4T	00218ES1RFD182T	790	R1	95	1.15	10.0	81.0	17.244	115/230	4
		1800	G56H	00218ES1RFDG56H	529	R1	55	1.15	10.5	78.1	13.858	115/230	4;9
3	2.2	1800	W182/4T	00318ES1DFD184T	915	R1	99	1.15	14.5	81.0	17.244	230	4
5	3.7	1800	184T	00518ES1DFD184T	1,074	R1	119	1.15	21.4	79.0	17.050	230	4
		1800	W213/5T	00518ES1DFD215T	1,205	R1	133	1.15	21.4	79.0	20.984	230	4
		1800	W213/5TZ	00518ES1DFD215Z	1,205	R1	132	1.15	21.4	79.0	20.984	230	4
7.5	5.5	1800	215T	00718ES1DFD215T	1,463	R1	166	1.15	33.0	83.0	19.567	230	4
		1800	215TZ	00718ES1DFD215Z	1,463	R1	166	1.15	33.0	83.0	19.567	230	4
10	7.5	1800	215T	01018ES1DFD215T	1,692	R1	187	1.15	40.0	83.0	19.567	230	4

Refer to electrical and mechanical data sections for additional technical information. Please refer to back cover for description of "NOTES"

For detailed specifications, data sheets, drawings and performance curves visit http://catalog.wegelectric.com

Data subject to change without notice.

TEFC – Single-Phase – Auger Drive – Footless



HP	kW	RPM	NEMA Frame	Catalog Number	List Price	Mult. Symbol	Approx. Shipping Weight (lbs)	Service Factor	FL Amps @ High	FL. Eff (%)	"C" Dimension (in)	Voltage (V)	Notes
0.33	0.25	1800	B56N	.3318ES1RADB56N	386	A1	25	1.15	2.80	61.0	12.760	115/230	4;9;20
0.5	0.37	1800	B56N	.5018ES1RADB56N	438	A1	27	1.15	3.70	66.5	12.760	115/230	4;9;20
0.75	0.55	1800	B56N	.7518ES1RADB56N	454	A1	29	1.15	5.30	68.5	12.760	115/230	4;9;20
1	0.75	1800	D56N	00118ES1RADD56N	567	A1	36	1.15	7.00	70.3	13.940	115/230	4;9;20
1.5	1.1	1800	F56N	00158ES1RADF56N	953	A1	50	1.15	8.70	76.5	15.120	115/230	4;9;20

Refer to electrical and mechanical data sections for additional technical information. Please refer to back cover for description of “NOTES”

For detailed specifications, data sheets, drawings and performance curves visit http://catalog.wegelectric.com

TEAO – Single-Phase – Poultry Fan – Foot Mount



HP	kW	RPM	NEMA Frame	Catalog Number	List Price	Mult. Symbol	Approx. Shipping Weight (lbs)	Service Factor	FL Amps @ High	FL. Eff (%)	"C" Dimension (in)	Voltage (V)	Notes
0.33	0.25	1800	48	.3318ES1BPFC48	311	G1	23	1.25	3.00	64.0	10.748	115/208-230	3;9;16
0.5	0.37	1800	C56	.5018ES1BPFC56	336	G1	27	1.25	4.20	65.0	11.102	115/208-230	3;9;16
0.75	0.55	1800	B56	.7518ES1BPFB56	414	G1	33	1.25	5.60	70.0	11.102	115/208-230	3;9
1	0.75	1800	D56	00118ES1BPFD56	449	G1	35	1.15	7.00	72.0	12.283	115/208-230	3;9

Refer to electrical and mechanical data sections for additional technical information. Please refer to back cover for description of "NOTES"

For detailed specifications, data sheets, drawings and performance curves visit http://catalog.wegelectric.com

Data subject to change without notice.



TEAO - Single-Phase - Poultry Fan - Resilient Base

HP	kW	RPM	NEMA Frame	Catalog Number	List Price	Mult. Symbol	Approx. Shipping Weight (lbs)	Service Factor	FL Amps @ High	FL. Eff (%)	"C" Dimension (in)	Voltage (V)	Notes
0.33	0.25	1800	48	.3318ES1BRBPFC48	325	G1	23	1.25	3.00	64.0	11.339	115/208-230	3;9;13;16
0.5	0.37	1800	C56	.5018ES1BRBPFC56	350	G1	27	1.25	4.20	65.0	11.732	115/208-230	3;9;13;16
0.75	0.55	1800	B56	.7518ES1BRBPFB56	433	G1	33	1.25	5.60	70.0	11.811	115/208-230	3;9;13
1	0.75	1800	D56	00118ES1BRBPFD56	469	G1	35	1.15	7.00	72.0	12.992	115/208-230	3;9;13

Refer to electrical and mechanical data sections for additional technical information. Please refer to back cover for description of “NOTES”

For detailed specifications, data sheets, drawings and performance curves visit http://catalog.wegelectric.com

Definite Purpose Motors

VECTOR DUTY MOTORS

TENV - Three-Phase - Foot Mount - Double C-Face

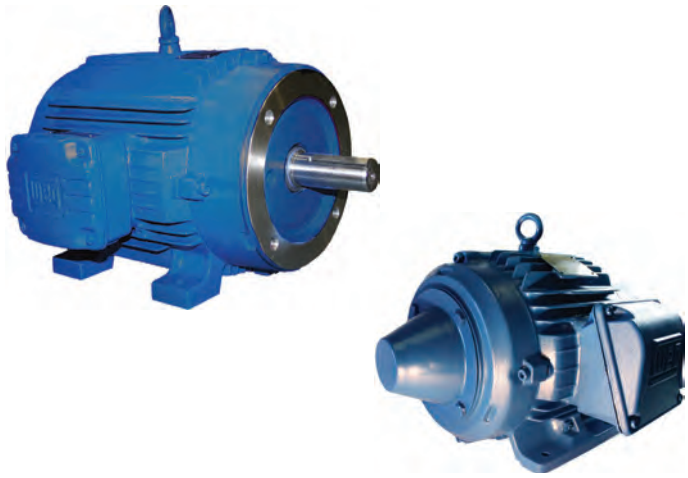

Designed specifically for inverter operation for applications requiring 1000:1 constant torque turndown ratio.

- Class F insulation (Impregnation Resin and Magnet wire are class H)
- NEMA design B
- F1 Mounted (F2 convertible)
- Stainless Steel Nameplate - Laser etched with high contrast background
- Gasketed conduit box
- Class I, Div. 2, Groups A, B, C & D – T3, Class II, Div 2, Groups F & G – T3C

ADDITIONAL TECHNICAL DATA

ELECTRICAL DATA: B-79
MECHANICAL DATA: C-58

Features that make a difference:

- Constant torque operation from 0 to base speed (1000:1) on PWM Vector Drive
- Constant Horsepower operation up to 150% base speed
- Ready for encoder mount
- With thermostats (1 per phase)
- Special nameplate data for easy drive set-up
- Ready for C-face brake, limited to 10 lb-ft braking torque

Inverter Rated:
1000 : 1 for constant torque

HP	kW	RPM	NEMA Frame	Catalog Number	List Price	Mult. Symbol	Approx. Shipping Weight (lbs)	Service Factor	FL Amps @ High	FL. Eff (%)	"C" Dimension (in)	Voltage (V)	Notes
1	0.75	1800	143TC	00118NT3FVD143TC-W22	697	D1	51	1.00	1.37	85.5	13.693	230/460	17
1.5	1.1	1800	145TC	00158NT3FVD145TC-W22	705	D1	57	1.00	1.98	86.5	14.678	230/460	17
2	1.5	1800	145TC	00218NT3FVD145TC-W22	928	D1	62	1.00	2.58	86.5	14.678	230/460	17
3	2.2	1800	182TC	00318NT3FVD182TC-W22	1,150	D1	100	1.00	3.91	89.5	15.569	230/460	17
5	3.7	1800	184TC	00518NT3FVD184TC-W22	1,373	D1	102	1.00	6.98	89.5	16.569	230/460	17
7.5	5.5	1800	213TC	00718NT3FVD213TC-W22	1,803	D1	173	1.00	9.08	91.7	18.541	230/460	17
10	7.5	1800	215TC	01018NT3FVD215TC-W22	2,157	D1	180	1.00	12.3	91.7	20.041	230/460	17
15	11	1800	254TC	01518NT3FVD254TC-W22	2,567	D1	316	1.00	19.3	92.4	23.837	230/460	17
20	3	1800	256TC	02018NT3FVD256TC-W22	3,747	D1	322	1.0	26.0	93.0	25.569	230/460	17

System Drive VFD AC Motors

1HP – 1500HP TEFC

The WEG Systems Drive VFD AC motor raises the bar for customers who demand the best. Benefits such as very high overload and expanded speed range capabilities increase the value of the product for many variable speed applications.

The designs are based on the W22 and H-Line Severe Duty motor platforms for outstanding reliability.

What makes this a Systems Drive Motor

- Constant torque capability to zero speed in standard NEMA frame size TEFC motor
- High torque designs for wide constant HP capability
- High short term overload capacities can exceed 200%
- 3 NC thermostats on winding
- Drive end shaft grounding available (standard 447T and larger)
- Insulated opposite drive end bearings available (standard 447T and larger)
- Very low noise
- Class I and Class II Division 2 up to 20:1CT to 449T frame (certification on larger ratings upon request)
- VFD rated insulation system exceeds requirements of NEMA MG1 Part 31 standard
- Custom designs for non-standard base speeds/frequencies (i.e. 600RPM base speed with 6-pole design) to replace many DC motor applications without gearing change



Features:

- 1000:1 Constant Torque
- Powerful
- Reliable
- Flexible

What makes this a WEG Motor

- Rugged FC200 high strength cast iron construction
- Paint system exceeds 200 hour salt spray test per ASTM B117
- PPLS – Positive Pressure Lubrication System
- All Silicon C4 coated lamination steel for reliability and repairability* – withstands burnout temperatures of 500C(935F) without loss of insulating properties. This allows the motor to be rewound back to the original efficiency
- Class F insulation system with mostly Class H components for long life
- Stainless steel nameplate

Please contact your authorized WEG distributor or go to **weg.net/us** for further information or additional specifications. **1-800-ASK-4WEG**

www.weg.net/us

Three-Phase General Purpose Motors

OIL WELL PUMPING – ODP & TEFC

These special motors have the high slip and high torque that oil well beam pumping units demand.

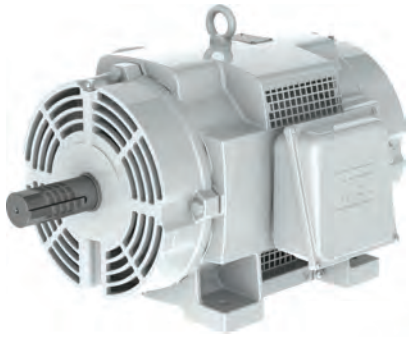

ODP

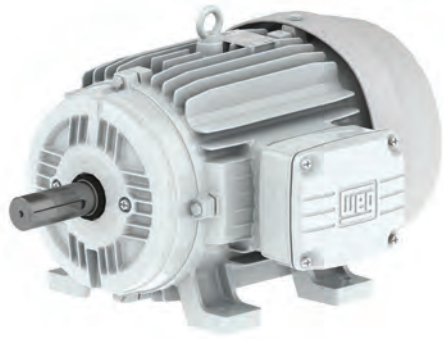

TEFC

Standard Features:

- Regreasable Bearings (Frames 254T and up)
- NEMA design D (5-8% slip)
- Class F insulation (Impregnation Resin and magnet Wire are class H)
- F2 Mounted (Cast Iron frames are F1 convertible).
- Stainless Steel Nameplate - Laser etched with High contrast background (Cast Iron Frames only)
- Gasketed conduit box (TEFC only)
- Class I, Div. 2, Groups A, B, C & D – T3, Class II, Div 2, Groups F & G – T3C (TEFC Frames only)

Features that make a difference:

- Anti-Rodent screen (ODP Frames 254T and up)
- High starting and breakdown torque (NEMA Design D)
- Roller bearings for frames 404T and up

ADDITIONAL TECHNICAL DATA

ELECTRICAL DATA: B-75; B-76
MECHANICAL DATA: C-11; C-15; C-2



TEFC – Three-Phase – NEMA Design 'D'

HP	kW	RPM	NEMA Frame	Catalog Number	List Price	Mult. Symbol	Approx. Shipping Weight (lbs)	Service Factor	FL Amps @ High	FL. Eff (%)	"C" Dimension (in)	Voltage (V)	Notes
3	2.2	1200	215T	00312ES3E0W215T	1,027	P1E	136	1.15	4.98	73.9	19.517	208-230/460	7
5	3.7	1200	215T	00512ES3E0W215T	1,170	P1E	181	1.15	7.40	77.5	19.517	208-230/460	7
		900	256T	00509ES3E0W256T	2,242	P1E	291	1.15	7.25	77.0	24.945	208-230/460	7
7.5	5.5	1200	254T	00712ES3E0W254T	1,688	P1E	272	1.15	9.26	83.8	23.213	208-230/460	7
10	7.5	1200	256T	01012ES3E0W256T	2,070	P1E	329	1.15	13.1	80.0	24.945	208-230/460	7
		900	286T	01009ES3E0W286T	3,437	P1E	403	1.15	13.9	82.5	27.929	208-230/460	7
15	11	1200	284T	01512ES3E0W284T	2,679	P1E	440	1.15	18.5	85.0	26.433	208-230/460	7
		900	324T	01509ES3E0W324T	4,293	P1E	535	1.15	19.5	85.5	29.620	208-230/460	7
20	15	1200	286T	02012ES3E0W286T	3,162	P1E	488	1.15	24.6	86.0	27.929	208-230/460	7
		900	326T	02009ES3E0W326T	4,872	P1E	613	1.15	26.2	85.5	31.116	208-230/460	7
25	18.5	1200	324T	02512ES3E0W324T	3,887	P1E	570	1.15	29.8	88.5	29.620	208-230/460	7
30	22	1200	326T	03012ES3E0W326T	4,515	P1E	614	1.15	35.5	89.4	31.116	208-230/460	7
40	30	1200	364/5T	04012ES3E0W365T	6,290	P1E	925	1.15	52.5	87.5	33.709	208-230/460	7
50	37	1200	404/5T	05012ES3E0W404T	8,172	P1E	1215	1.15	62.0	88.1	38.077	208-230/460	1;7;14
60	45	1200	404/5T	06012ES3E0W405T	9,414	P1E	1252	1.15	78.5	89.0	38.077	208-230/460	1;7;14
75	55	1200	444/5T	07512ES3E0W444T	14,976	P1E	1759	1.15	90.0	87.0	43.776	208-230/460	1;7;14
100	75	1200	444/5T	10012ES3E0W445T	18,074	P1E	2063	1.15	120	90.2	43.776	208-230/460	1;7;14

Refer to electrical and mechanical data sections for additional technical information. Please refer to back cover for description of "NOTES"

For detailed specifications, data sheets, drawings and performance curves visit http://catalog.wegelectric.com

OIL WELL PUMPING – ODP & TEFC



ODP – Three-Phase – NEMA Design 'D'

HP	kW	RPM	NEMA Frame	Catalog Number	List Price	Mult. Symbol	Approx. Shipping Weight (lbs)	Service Factor	FL Amps @ High	FL. Eff (%)	"C" Dimension (in)	Voltage (V)	Notes
1.5	1.1	1200	184T	00152OS3E0W184T	777	P1E	71	1.00	2.66	71.0	14.291	208-230/460	1;7
2	1.5	1200	184T	00212OS3E0W184T	793	P1E	78	1.00	3.36	81.3	14.291	208-230/460	1;7;9
3	2.2	1200	213T	00312OS3E0W213T	866	P1E	113	1.00	4.69	80.7	17.165	208-230/460	1;7;9
5	3.7	1200	215T	00512OS3E0W215T	989	P1E	125	1.00	7.15	85.5	17.165	208-230/460	1;7;9
7.5	5.5	1200	254T	00712OS3E0W254T	1,434	P1E	230	1.00	9.63	81.5	20.669	208-230/460	1;7
10	7.5	1200	256T	01012OS3E0W256T	1,796	P1E	273	1.00	13.5	83.0	22.401	208-230/460	1;7
15	11	1200	284T	01512OS3E0W284T	2,441	P1E	349	1.00	18.1	86.5	23.386	208-230/460	1;7
20	15	1200	286T	02012OS3E0W286T	2,603	P1E	357	1.00	24.5	86.5	24.882	208-230/460	1;7
25	18.5	1200	324T	02512OS3E0W324T	3,247	P1E	503	1.00	33.6	86.5	26.181	208-230/460	1;7
30	22	1200	326T	03012OS3E0W326T	3,848	P1E	556	1.00	39.0	88.5	27.667	208-230/460	1;7
40	30	1200	364/5T	04012OS3E0W365T	5,277	P1E	860	1.00	51.3	88.5	29.764	208-230/460	1;7
50	37	1200	404/5T	05012OS3E0W405T	6,834	P1E	1019	1.00	61.7	88.5	34.133	208-230/460	1;7;14
60	45	1200	404/5T	06012OS3E0W405T	7,495	P1E	1036	1.00	75.1	88.5	34.133	208-230/460	1;7;14
75	55	1200	444/5T	07512OS3E0W445T	12,308	P1E	1458	1.00	96.4	89.5	39.803	208-230/460	1;7;14
100	75	1200	444/5T	10012OS3E0W445T	13,078	P1E	1706	1.00	127	90.2	39.803	208-230/460	1;7;14

Refer to electrical and mechanical data sections for additional technical information. Please refer to back cover for description of "NOTES"

For detailed specifications, data sheets, drawings and performance curves visit http://catalog.wegelectric.com

Data subject to change without notice.

Definite Purpose Motors

COMPRESSOR DUTY MOTORS

ODP - Single-Phase – Foot Mount

These high quality motors are designed to meet the high torque requirements of air compressor loads. Special electrical and mechanical design guarantee reliable service and longer motor life.



Single Phase



Three Phase

Single-Phase

- Class B insulation
- Start Capacitor
- Ball bearings
- Manual Reset Thermal Overload Protection
- High starting torque
- Rolled Steel frames have base seam welded to the frame for heavy duty use

Three-Phase

- Class F insulation (Impregnation Resin and Magnet wire are class H)
- Class B Rise at 1.15 Service Factor
- F1 Mounted (Cast Iron Frame motors are F2 convertible)
- Stainless Steel Nameplate - Laser etched with high contrast background (Cast Iron Frames only)
- Cast Iron Frames: Regreasable ball bearings
- Rolled Steel Frames: ZZ ball bearings (permanently lubricated)

ADDITIONAL TECHNICAL DATA

ELECTRICAL DATA: B-77; B-18
MECHANICAL DATA: C-56; C-11; C-15

COMPRESSOR DUTY MOTORS



ODP – Single-Phase – Foot Mount

HP	kW	RPM	NEMA Frame	Catalog Number	List Price	Mult. Symbol	Approx. Shipping Weight (lbs)	Service Factor	FL Amps @ High	FL. Eff (%)	"C" Dimension (in)	Voltage (V)	Notes
0.5	0.37	3600	C56	.50360S1BCDC56	224	C1	24	1.00	3.30	63.0	10.551	115/208-230	1;4;6;9
0.75	0.55	3600	C56	.75360S1BCDC56	237	C1	32	1.00	4.60	66.0	10.551	115/208-230	1;4;6;9
1	0.75	3600	B56	00136OS1BCDB56	278	C1	36	1.00	6.10	67.0	11.102	115/208-230	1;4;6;9
1.5	1.1	3600	D56	00156OS1BCDD56	311	C1	40	1.00	8.40	68.0	12.283	115/208-230	1;4;6;9
2	1.5	3600	D56	00236OS1BCDD56	372	C1	41	1.00	11.0	70.0	12.283	115/208-230	1;4;6;9
3	2.2	3600	F56H	00336OS1BCDF56	432	C1	44	1.00	14.7	77.0	13.464	115/208-230	1;4;6;9
		1800	184T	00318OS1CCD0L184T	687	C1	97	1.15	17.5	75.0	14.875	208-230	4;6
4	3.0	3600	G56HZ	00436OS1DCDG56HZ	453	C1	47	1.15	16.5	82.5	14.234	230	4;5;6;9
5	3.7	3600	G56H	00536OS1CCDG56	458	C1	52	1.00	19.0	85.0	13.858	208-230	1;4;6;9
		3600	G56HZ	00536OS1CCDG56HZ	481	C1	52	1.00	19.0	85.0	14.234	208-230	1;4;5;6;9
		1800	184T	00518OS1CCD184T	682	C1	97	1.25	21.5	82.5	14.875	208-230	6;10
		1800	184T	00518OS1CCD0L184T	721	C1	98	1.15	21.5	82.5	14.875	208-230	4;6
6.4	4.8	3600	182/4Y	00636OS1XCD182/4Y	526	C1	53	1.00	23.0	85.0	15.650	240	1;4;5;6;9
7.5	5.5	1800	215T	00718OS1CCD215T	961	C1	132	1.15	31.3	84.5	19.660	208-230	5;6;9;28
10	7.5	1800	215T	01018OS1CCD215T	1,468	C1	161	1.15	43.0	85.0	21.235	208-230	5;6;9;28

Refer to electrical and mechanical data sections for additional technical information. Please refer to back cover for description of "NOTES"

For detailed specifications, data sheets, drawings and performance curves visit http://catalog.wegelectric.com

Data subject to change without notice.



ODP – Three-Phase – Foot Mount – NEMA Premium

HP	kW	RPM	NEMA Frame	Catalog Number	List Price	Mult. Symbol	Approx. Shipping Weight (lbs)	Service Factor	FL Amps @ High	FL. Eff (%)	"C" Dimension (in)	Voltage (V)	Notes
1	0.75	1800	E143/5T	00118OT3ECD143T	398	N1B	48	1.15	1.45	85.5	12.047	208-230/460	6;9
1.5	1.1	1800	E143/5T	00158OP3PCD145T	382	W1B	40	1.15	4.83	84.0	12.047	200	6;9;30
		1800	E143/5T	00158OT3ECD145T	458	N1B	56	1.15	2.20	86.5	12.047	208-230/460	6;9
2	1.5	1800	E143/5T	00218OT3ECD145T	502	N1B	57	1.15	2.90	86.5	12.047	208-230/460	6;9
3	2.2	1800	182T	00318OT3ECD182T	535	N1B	66	1.15	4.06	89.5	13.504	208-230/460	6;9
5	3.7	3600	F56H	00536OS3ECDF56	412	C1	45	1.00	6.70	74.8	13.464	208-230/460	1;6;9;29
		1800	184T	00518OP3NCD184T	532	W1B	74	1.15	7.93	87.5	14.291	220/380	6;9;30
		1800	184T	00518OT3ECD184T	643	N1B	78	1.15	6.41	89.5	14.291	208-230/460	6;9
7.5	5.5	3600	184T	00736OT3ECD184T	938	N1B	74	1.15	8.97	88.5	14.291	208-230/460	6;9
		1800	213/5T	00718OT3ECD213T	928	N1B	113	1.15	9.03	91.0	17.165	208-230/460	6;9
		1800	213T	00718OT3PCD213T	928	N1B	102	1.15	20.8	91.0	14.291	200	6;9
10	7.5	1800	215T	01018OT3ECD215T	1,124	N1B	140	1.15	12.2	91.7	17.165	208-230/460	6;9
		1800	213/5T	01018OT3PCD215T	1,124	N1B	139	1.15	28.1	91.7	17.165	200	6;9
15	11	1800	254T	01518OP3PCD254T	1,256	W1B	235	1.15	43.0	91.0	20.669	200	6;30
		1800	254T	01518OT3ECD254T	1,507	N1B	261	1.15	18.4	91.0	20.669	208-230/460	6
		1800	254T	01518OT3HCD254T	1,507	N1B	261	1.15	14.9	91.0	20.669	575	6
		1800	254T	01518OT3PCD254T	1,507	N1B	261	1.15	42.8	91.0	20.669	200	6
20	15	3600	254T	02036OT3ECD254T	1,795	N1B	259	1.15	24.6	91.0	20.669	208-230/460	6
		3600	254T	02536OT3ECD256T	2,182	N1B	259	1.15	29.8	91.7	22.401	208-230/460	6
		1800	256T	02018OT3ECD256T	1,869	N1B	298	1.15	25.0	93.0	22.401	208-230/460	6

Refer to electrical and mechanical data sections for additional technical information. Please refer to back cover for description of “NOTES”

For detailed specifications, data sheets, drawings and performance curves visit http://catalog.wegelectric.com



HYDRAULIC PUMP MOTORS

TEFC – Three-Phase – SAE-A – High Efficiency

Heavy duty cast iron enclosure designed for continuous or intermittent duty. Typical applications are hydraulic pumps for trash compactors, car lift and others.

- Class F insulation (Impregnation Resin and magnet Wire are class H)
- F3 mount
- 8-hole SAE-A flange for different angle pump mounting
- Shaft with 3/4” bore (female shaft)

Features that make a difference

- NPT Threaded terminal box
- Cast Iron frame
- Totally Enclosed IP55 rated

HP	kW	RPM	NEMA Frame	Catalog Number	List Price	Mult. Symbol	Approx. Shipping Weight (lbs)	Service Factor	FL Amps @ High	FL. Eff (%)	"C" Dimension (in)	Voltage (V)	Notes
5	3.7	1800	184TYZ	00518EP3EHP184TYZ7F3	819	W1	102	1.15	7.29	88.5	12.800	208-230/460	8;30
7.5	5.5	1800	213TYZ	00718EP3EHP213TYZ7F3	1,054	W1	172	1.15	10.7	89.5	14.816	208-230/460	8;30
10	7.5	1800	215TYZ	01018EP3EHP215TYZ7F3	1,244	W1	189	1.15	15.0	89.5	16.312	208-230/460	8;30
15	11	1800	215TYZ	01518ES3EHP215TYZ6F3	1,360	W1	160	1.15	20.5	87.5	16.057	208-230/460	8;29

Refer to electrical and mechanical data sections for additional technical information. Please refer to back cover for description of “NOTES”

For detailed specifications, data sheets, drawings and performance curves visit http://catalog.wegelectric.com

Data subject to change without notice.

Three-Phase Brake Motors

TEFC - High Efficiency

WEG brake motors consist of an induction motor coupled to a disc brake. Brake is of sturdy construction with few moving parts which guarantees long durability and minimum maintenance.



Standard Features:

- Class F insulation (Impregnation Resin and Magnet wire are class H)
- F1 Mounted
- Stainless Steel Nameplate - Laser etched with high contrast background
- Regreasable ball bearings (Frames 254T and up)

Features that make a difference:

- 1.25 service factor
- NPT Threaded terminal box
- Armature type brake
- Manual Release

Inverter Rated:
1000:1 for variable torque
12:1 for constant torque

If separate power supply to the Brake is required, (Such as on Motors operating from Variable frequency Controller); 230V to the Brake module is mandatory, unless motor model contains "Q" (ex. 00118EP3EBMQ143T). For "Q" models, the input voltage to the Brake module is 460V AC.

Brake Torques		
Frame	N.m	lb.ft
143/5T	16	12
182/4T	60	44
213/5T	125	92
254/6T	235	173
284/6T	400	295

ADDITIONAL TECHNICAL DATA

ELECTRICAL DATA: B-56
MECHANICAL DATA: C-36



BRAKE MOTORS

TEFC – Foot Mount

HP	kW	RPM	NEMA Frame	Catalog Number	List Price	Mult. Symbol	Approx. Shipping Weight (lbs)	Service Factor	FL Amps @ High	FL. Eff (%)	"C" Dimension (in)	Voltage (V)	Notes
1	0.75	1800	143T	00118EP3EBM143T	1,378	B1	56	1.25	1.48	82.5	15.222	208-230/460	25;30
		1800	143T	00118EP3EBMQ143T	1,538	B1	52	1.25	1.48	82.5	15.222	208-230/460	24;26;30
		1800	143T	00118EP3HBM143T	1,378	B1	52	1.25	1.18	82.5	15.222	575	11;25;30
		1200	145T	00112EP3EBM145T	1,484	B1	62	1.25	1.70	80.0	16.166	208-230/460	25;30
		900	182T	00109EP3EBM182T	2,350	B1	105	1.25	2.31	74.0	18.246	208-230/460	25;30
1.5	1.1	3600	143T	00156EP3EBM143T	1,389	B1	49	1.25	2.07	82.5	15.222	208-230/460	25;30
		1800	145T	00158EP3EBM145T	1,435	B1	63	1.25	2.05	84.0	16.166	208-230/460	25;30
		1800	145T	00158EP3EBMQ145T	1,595	B1	58	1.25	2.05	84.0	16.166	208-230/460	24;26;30
		1200	182T	00152EP3EBM182T	2,138	B1	103	1.25	2.37	85.5	18.246	208-230/460	25;30
		900	184T	00159EP3EBM184T	2,479	B1	130	1.25	2.72	77.0	19.246	208-230/460	25;30
2	1.5	3600	145T	00236EP3EBM145T	1,401	B1	52	1.25	2.60	84.0	16.166	208-230/460	25;30
		1800	145T	00218EP3EBM145T	1,447	B1	63	1.25	2.77	84.0	16.166	208-230/460	25;30
		1800	145T	00218EP3EBMQ145T	1,607	B1	60	1.25	2.77	84.0	16.166	208-230/460	24;26;30
		1200	184T	00212EP3EBM184T	2,233	B1	125	1.25	3.20	86.5	19.246	208-230/460	25;30
		900	213T	00209EP3EBM213T	2,977	B1	181	1.25	3.46	82.5	22.646	208-230/460	25;30
3	2.2	3600	182T	00336EP3EBM182T	2,116	B1	117	1.25	3.71	85.5	18.246	208-230/460	25;30
		1800	182T	00318EP3EBM182T	1,916	B1	107	1.25	3.90	87.5	18.246	208-230/460	25;30
		1800	182T	00318EP3EBMQ182T	2,076	B1	108	1.25	3.90	87.5	18.246	208-230/460	24;26;30
		1200	213T	00312EP3EBM213T	2,982	B1	187	1.25	4.26	87.5	22.646	208-230/460	25;30
		900	215T	00309EP3EBM215T	3,234	B1	216	1.25	4.33	84.0	24.142	208-230/460	25;30
5	3.7	3600	184T	00536EP3EBM184T	2,190	B1	122	1.25	5.90	87.5	19.246	208-230/460	25;30
		1800	184T	00518EP3EBM184T	2,143	B1	103	1.25	6.47	87.5	19.246	208-230/460	25;30
		1800	184T	00518EP3EBMQ184T	2,303	B1	113	1.25	6.47	87.5	19.246	208-230/460	24;26;30
		1800	184T	00518EP3HBM184T	2,143	B1	102	1.25	5.24	87.5	19.246	575	25;30
		1200	215T	00512EP3EBM215T	3,218	B1	209	1.25	6.80	87.5	24.142	208-230/460	25;30
		900	254T	00509EP3EBM254T	5,043	B1	284	1.25	7.99	85.5	28.095	208-230/460	25;30
7.5	5.5	3600	213T	00736EP3EBM213T	2,860	B1	167	1.25	8.67	88.5	22.646	208-230/460	25;30
		1800	213T	00718EP3EBM213T	2,640	B1	179	1.25	9.52	89.5	22.646	208-230/460	25;30
		1200	254T	00712EP3EBM254T	4,756	B1	271	1.25	9.52	89.5	28.095	208-230/460	25;30
		900	256T	00709EP3EBM256T	5,613	B1	328	1.25	11.2	86.5	29.827	208-230/460	25;30
10	7.5	3600	215T	01036EP3EBM215T	3,304	B1	198	1.25	11.7	89.5	24.142	208-230/460	25;30
		1800	215T	01018EP3EBM215T	3,184	B1	209	1.25	12.7	89.5	24.142	208-230/460	25;30
		1800	215T	01018EP3HBM215T	3,184	B1	167	1.25	10.2	89.5	24.142	575	25;30
		1200	256T	01012EP3EBM256T	5,260	B1	292	1.25	13.3	89.5	29.827	208-230/460	25;30

Refer to electrical and mechanical data sections for additional technical information. Please refer to back cover for description of "NOTES"

For detailed specifications, data sheets, drawings and performance curves visit http://catalog.wegelectric.com

Data subject to change without notice.

BRAKE MOTORS

TEFC – Foot Mount *continued*

HP	kW	RPM	NEMA Frame	Catalog Number	List Price	Mult. Symbol	Approx. Shipping Weight (lbs)	Service Factor	FL Amps @ High	FL. Eff (%)	"C" Dimension (in)	Voltage (V)	Notes
15	11	3600	254T	01536EP3EBM254T	4,560	B1	306	1.25	17.0	90.2	28.095	208-230/460	25;30
		1800	254T	01518EP3EBM254T	4,852	B1	300	1.25	17.8	91.0	28.095	208-230/460	25;30
		1800	254T	01518EP3EBMQ254T	5,012	B1	293	1.25	17.8	91.0	28.095	208-230/460	24;26;30
20	15	3600	256T	02036EP3EBM256T	5,371	B1	339	1.25	23.3	90.2	29.827	208-230/460	25;30
		1800	256T	02018EP3EBM256T	5,404	B1	328	1.25	24.3	91.0	29.827	208-230/460	25;30
25	18.5	1800	284T	02518EP3EBM284T	6,248	B1	482	1.25	29.6	92.4	32.648	208-230/460	25;30
30	22	1800	286T	03018EP3EBM286T	6,259	B1	512	1.25	34.3	92.4	34.144	208-230/460	25;30



BRAKE MOTORS

TEFC - C-Face - Foot Mount

HP	kW	RPM	NEMA Frame	Catalog Number	List Price	Mult. Symbol	Approx. Shipping Weight (lbs)	Service Factor	FL Amps @ High	FL. Eff (%)	"C" Dimension (in)	Voltage (V)	Notes
1	0.75	1800	143TC	00118EP3EBMQ143TC	1,816	B1	52	1.25	1.48	82.5	15.222	208-230/460	24;26;30
1.5	1.1	1800	145TC	00158EP3EBMQ145TC	1,873	B1	58	1.25	2.05	84.0	16.166	208-230/460	24;26;30
2	1.5	1800	145TC	00218EP3EBMQ145TC	1,885	B1	60	1.25	2.77	84.0	16.166	208-230/460	24;26;30
3	2.2	1800	182TC	00318EP3EBMQ182TC	2,387	B1	108	1.25	3.90	87.5	18.246	208-230/460	24;26;30
5	3.7	1800	184TC	00518EP3EBMQ184TC	2,614	B1	113	1.25	6.47	87.5	19.246	208-230/460	24;26;30

Note: Flanged motors on Cast Iron frame sizes 143/5 to 254/6 have non-NEMA BA dimension. Refer to mechanical section of this catalog for details.

Definite Purpose Motors

SAW ARBOR MOTORS



TEFC

Single and double shaft end available. These motors are suitable for a wide range of applications such as circular saws, pendulum saws, polishing machines, among others.

Standard Features:

- Class F insulation (Impregnation Resin and magnet Wire are class H)
- Ball bearings
- PG threaded terminal boxes

Features that make a difference:

- Reinforced cast iron frame
- Low profile

ADDITIONAL TECHNICAL DATA

ELECTRICAL DATA: B-78
MECHANICAL DATA: C-61



TEFC – Three-Phase – Right-Hand Thread

HP	kW	RPM	NEMA Frame	Catalog Number	List Price	Mult. Symbol	Approx. Shipping Weight (lbs)	Service Factor	FL Amps @ High	FL. Eff (%)	"C" Dimension (in)	Voltage (V)	Notes
3	2.2	3600	80S	00336ES3ESA80SR	969	01	95	1.15	4.29	80.5	18.543	208-230/460	
5	3.7	3600	80M	00536ES3ESA80MR	1,160	01	110	1.15	6.65	85.0	20.512	208-230/460	
		1800	90L	00518ES3ESA90LR	1,701	01	163	1.15	7.03	84.5	26.476	208-230/460	
7.5	5.5	3600	80L	00736ES3ESA80LR	1,642	01	133	1.15	9.76	87.4	22.480	208-230/460	
		3600	80L	00736ES3HSA80LR	1,642	01	133	1.15	7.81	87.4	22.480	575	
		1800	90L	00718ES3ESA90LR	1,855	01	179	1.15	10.1	85.3	26.476	208-230/460	
10	7.5	3600	90L	01036ES3ESA90LR	1,953	01	180	1.15	12.3	85.0	26.476	208-230/460	
		3600	90L	01036ES3HSA90LR	1,953	01	180	1.15	9.83	85.0	26.476	575	
		1800	90L	01018ES3ESA90LR	2,176	01	194	1.15	14.1	85.5	26.476	208-230/460	

Refer to electrical and mechanical data sections for additional technical information. Please refer to back cover for description of “NOTES”

For detailed specifications, data sheets, drawings and performance curves visit http://catalog.wegelectric.com

SAW ARBOR MOTORS



TEFC – Three-Phase – Left-Hand Thread

HP	kW	RPM	NEMA Frame	Catalog Number	List Price	Mult. Symbol	Approx. Shipping Weight (lbs)	Service Factor	FL Amps @ High	FL. Eff (%)	"C" Dimension (in)	Voltage (V)	Notes
3	2.2	3600	80S	00336ES3ESA80SL	969	01	95	1.15	4.29	80.5	18.543	208-230/460	
5	3.7	3600	80M	00536ES3ESA80ML	1,160	01	110	1.15	6.65	85.0	20.512	208-230/460	
		1800	90L	00518ES3ESA90LL	1,701	01	163	1.15	7.03	84.5	26.476	208-230/460	
7.5	5.5	3600	80L	00736ES3ESA80LL	1,642	01	132	1.15	9.76	87.4	22.480	208-230/460	
		3600	80L	00736ES3HSA80LL	1,642	01	132	1.15	7.81	87.4	22.480	575	
		1800	90L	00718ES3ESA90LL	1,855	01	179	1.15	10.1	85.3	26.476	208-230/460	
10	7.5	3600	90L	01036ES3ESA90LL	1,953	01	180	1.15	12.3	85.0	26.476	208-230/460	
		3600	90L	01036ES3HSA90LL	1,953	01	170	1.15	9.83	85.0	26.476	575	
		1800	90L	01018ES3ESA90LL	2,176	01	193	1.15	14.1	85.5	26.476	208-230/460	

Refer to electrical and mechanical data sections for additional technical information. Please refer to back cover for description of "NOTES"

For detailed specifications, data sheets, drawings and performance curves visit http://catalog.wegelectric.com

Data subject to change without notice.

TEFC - C-Face - Footless

HP	kW	RPM	NEMA Frame	Catalog Number	List Price	Mult. Symbol	Approx. Shipping Weight (lbs)	Service Factor	FL Amps @ High	FL. Eff (%)	"C" Dimension (in)	Voltage (V)	Notes
1.5	3	1800	143/5TCZ	00158EP3ESB145TCZ-1	1,352	RS	45	1.15	2.20	84.0	15.321	208-230/460	9;15;30
2	3	1800	143/5TCZ	00218EP3ESB145TCZ-1	1,463	RS	52	1.15	2.95	84.0	15.321	208-230/460	9;15;30
2	3	1800	143/5TCZ	00218EP3ESB145TCZ-2	1,463	RS	43	1.15	2.95	84.0	15.320	208-230/460	9;20;30

Type -1 shaft

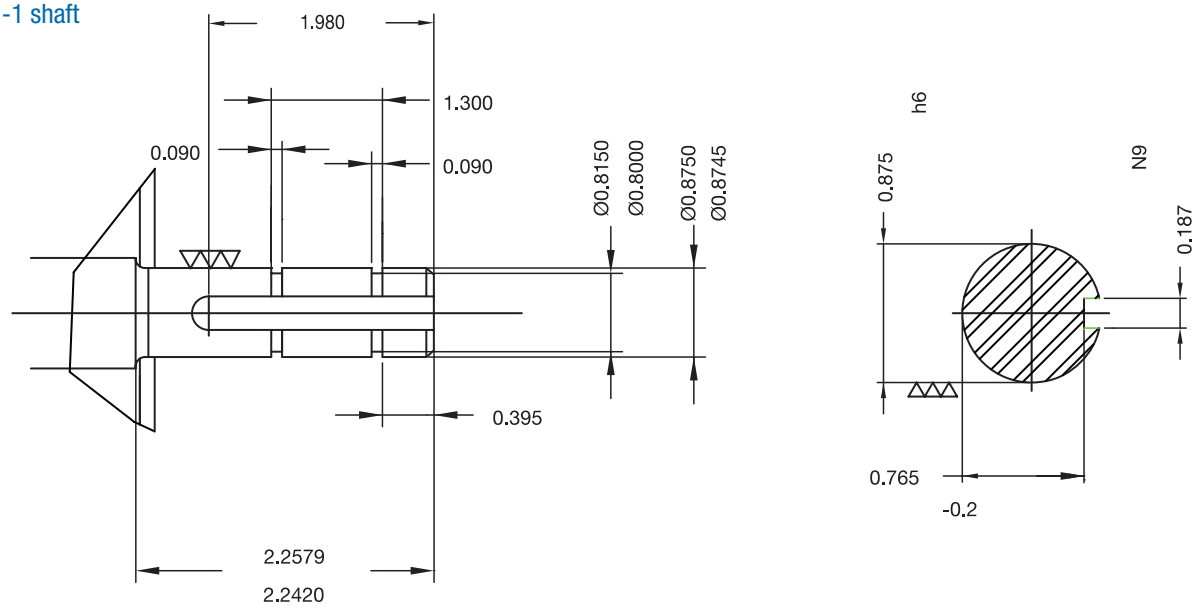

Type -2 shaft

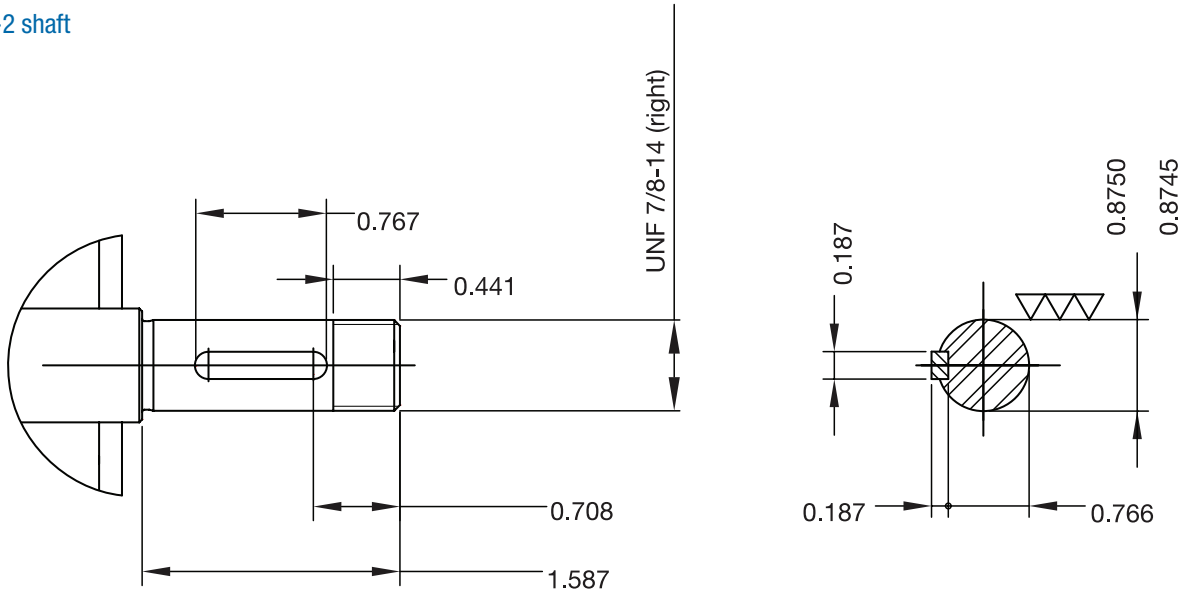

Refer to electrical and mechanical data sections for additional technical information. Please refer to back cover for description of "NOTES"

For detailed specifications, data sheets, drawings and performance curves visit http://catalog.wegelectric.com

Medium Voltage Motors

Severe Duty is Standard with WEG W22 motors

No matter what you call it, WEG's W22 standard product is designed for:

DUTY	STANDARD
Mill-Chem	✓
Tough Service	✓
Severe Duty	✓
Crusher Duty	✓
WEG Duty	✓

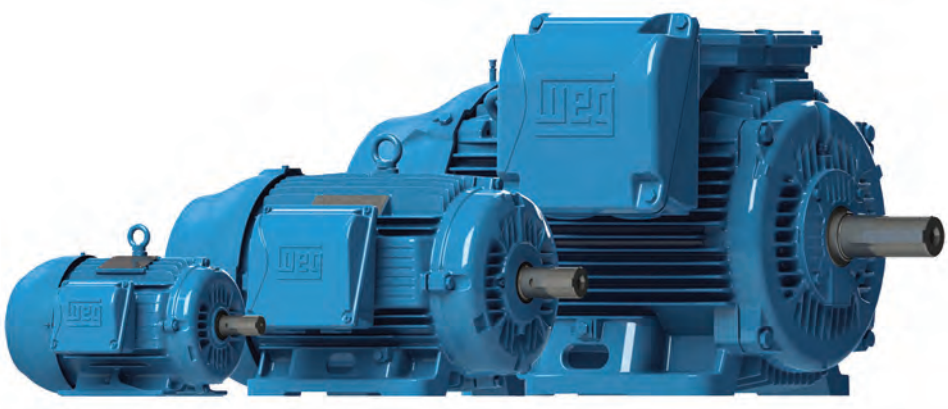



Severe Duty

High performance with maximum energy efficiency is the goal of the new WEG electric motor. High efficiency and low cost of ownership throughout the entire motor lifetime have been the basis for the W22 development. A design created to maximize performance and energy savings.

Applications

Pumps, fans, crushers, conveyor belts, mills, centrifugal machines, presses, elevators, packaging equipment, grinders and more.

Standard Features

- 3-phase, 2, 4, 6 & 8 pole, 60 Hz
- Voltages: 2300V through 6600V
- Totally Enclosed Fan Cooled - TEFC (IP55) as per NEMA MG1
- Squirrel Cage rotor / Aluminum die cast
- Frames L447/9, 586/7 and 588/9 are all fitted with WSeal®
- Ball Bearings
- Regreasable bearings with grease fittings on DE and NDE
- AISI 4140 high strength steel shaft
- Class “F” insulation for all frames
- Form Wound and VPI impregnation insulation system
- Temperature rise limited to Class “B” (80K) unless otherwise indicated
- NEMA design “B”
- Service Factor: 1.15 unless otherwise indicated
- Continuous duty (S1)
- 104°F (40°C) ambient temperature
- Altitude: 3300ft (1000m)
- NPT threaded conduit hole
- Double Gasketed terminal box
- Field re-configurable terminal box (Mounting F1, F2, F3)
- Stainless steel nameplate AISI 316 with laser etching
- Paint: Synthetic enamel alkyd resin base (240 hours minimum ASTM B117 salt spray test)
- Paint Plan: 203A
- Color: RAL 5009 - Blue
- Fitted with closed rubber drain plug
- 2 x RTD (PT100) per phase
- Plastic fan for 2 pole motors on frames L447/9 and 586/7
- Aluminum fan for frames L447/9 and 586/7 at 4, 6, or 8 poles and frame 588/9 on 2, 4, 6 and 8 poles
- Warranty – 18 months from manufacture date OR 12 months from delivery
- CSA Safe Area Certification provided as standard

Optional Features

- 50 Hz motors
- Space heater
- Bearing RTDs
- Roller bearings available
- Shaft: special dimensions, double shaft, tapered, special steel
- Labyrinth tachonite seal available for all ratings
- Degrees of Protection: IP56(W), IP65(W), InproSeal
- Themostats, Thermistors
- Vertical Jackscrews
- Dowel Pin Provisions
- Additional terminal box
- Drip cover (canopy) for shaft down applications
- Cable glands
- NEMA FC Face and D flanges for all ratings
- Special painting plan or color
- VFD application available
- IEEE-841 compliant and nameplated up to and including 500HP
- IEC Standard available
- CSA CUS Hazardous Area Certification available

For other features, please contact your representative



C US

CSA Certified

W22 Medium Voltage Motors – TEFC 2300 – 4160V
Severe Duty

HP	RPM	NEMA Frame	Catalog Number	List Price	Mult. Symbol	Approx. Shipping Weight (lbs)	FL Amps 2.3	2.4	3.3 kV	4.0	4.16	"C" Dimension (in.)	Voltage (V)	Notes
125	3600	L447/9TS	1253600W22ZL447	39,319	MAQ1	2500	28.80	27.6	20.0	16.5	15.9	53.431	2300 - 4160	
	1200	L447/9T	1251200W22ZL447	39,125	MAQ1	3000	30.40	29.1	21.2	17.5	16.8	57.181	2300 - 4160	
	900	L447/9T	1250900W22ZL447	47,848	MAQ1	3000	34.70	33.3	24.2	20.0	19.2	57.181	2300 - 4160	
150	3600	L447/9TS	1503600W22ZL447	40,554	MAQ1	3000	34.90	33.5	24.3	20.1	19.3	53.431	2300 - 4160	
	1800	L447/9T	1501800W22ZL447	36,829	MAQ1	3000	35.60	34.1	24.8	20.5	19.7	57.181	2300 - 4160	
	1200	L447/9T	1501200W22ZL447	40,355	MAQ1	3000	36.70	35.2	25.6	21.1	20.3	57.181	2300 - 4160	
	900	L447/9T	1500900W22ZL447	49,354	MAQ1	3500	42.30	40.6	29.5	24.3	23.4	57.181	2300 - 4160	
175	3600	L447/9TS	1753600W22ZL447	41,830	MAQ1	3000	41.60	39.9	29.0	23.9	23.0	53.431	2300 - 4160	
	1800	L447/9T	1751800W22ZL447	37,989	MAQ1	3000	42.10	40.4	29.4	24.2	23.3	57.181	2300 - 4160	
	1200	L447/9T	1751200W22ZL447	41,624	MAQ1	3000	43.80	41.9	30.5	25.2	24.2	57.181	2300 - 4160	
	900	L447/9T	1750900W22ZL447	50,543	MAQ1	3500	51.50	49.4	35.9	29.6	28.5	57.181	2300 - 4160	
200	3600	L447/9TS	2003600W22ZL447	42,432	MAQ1	3000	47.00	45.1	32.8	27.0	26.0	53.431	2300 - 4160	
	1800	L447/9T	2001800W22ZL447	39,147	MAQ1	3000	47.70	45.8	33.3	27.5	26.4	57.181	2300 - 4160	
	1200	L447/9T	2001200W22ZL447	42,221	MAQ1	3500	49.70	47.7	34.7	28.6	27.5	57.181	2300 - 4160	
	900	L447/9T	2000900W22ZL447	52,544	MAQ1	3500	58.40	56.0	40.7	33.6	32.3	57.181	2300 - 4160	*
250	3600	L447/9TS	2503600W22ZL447	45,670	MAQ1	3500	57.20	54.8	39.8	32.9	31.6	53.431	2300 - 4160	
	1800	L447/9T	2501800W22ZL447	41,465	MAQ1	3500	58.40	56.0	40.7	33.6	32.3	57.181	2300 - 4160	
	1200	L447/9T	2501200W22ZL447	45,445	MAQ1	3500	64.80	62.1	45.1	37.2	35.8	57.181	2300 - 4160	*
	900	586/7T	2500900W22Z586	59,887	MAQ1	4500	67.50	64.7	47.0	38.8	37.3	61.902	2300 - 4160	
300	3600	L447/9TS	3003600W22ZL447	47,364	MAQ1	3500	67.80	65.0	47.3	39.0	37.5	53.431	2300 - 4160	*
	1800	L447/9T	3001800W22ZL447	42,603	MAQ1	3500	69.50	66.6	48.4	39.9	38.4	57.181	2300 - 4160	
	1200	586/7T	3001200W22Z586	51,688	MAQ1	4500	76.00	72.8	52.9	43.7	42.0	61.902	2300 - 4160	
	900	588/9T	3000900W22Z588	66,311	MAQ1	5000	80.10	76.8	55.8	46.1	44.3	69.381	2300 - 4160	
350	3600	586/7TS	3503600W22Z586	55,113	MAQ1	4000	78.00	74.7	54.3	44.8	43.1	55.027	2300 - 4160	
	1800	586/7T	3501800W22Z586	46,521	MAQ1	4500	83.70	80.3	58.4	48.2	46.3	61.902	2300 - 4160	
	1200	588/9T	3501200W22Z588	55,338	MAQ1	5000	89.50	85.8	62.4	51.5	49.5	69.381	2300 - 4160	
	900	588/9T	3500900W22Z588	74,543	MAQ1	5000	95.50	91.5	66.6	54.9	52.8	69.381	2300 - 4160	
400	3600	588/9TS	4003600W22Z588	59,323	MAQ1	4500	89.70	86.0	62.5	51.6	49.6	62.506	2300 - 4160	
	1800	588/9T	4001800W22Z588	50,970	MAQ1	5000	94.20	90.3	65.7	54.2	52.1	69.381	2300 - 4160	
	1200	588/9T	4001200W22Z588	59,565	MAQ1	5000	103	98.6	71.7	59.2	56.9	69.381	2300 - 4160	
	900	588/9T	4000900W22Z588	80,235	MAQ1	5500	107	103	74.6	61.6	59.2	69.381	2300 - 4160	*
450	3600	588/9TS	4503600W22Z588	62,166	MAQ1	5000	98.80	94.6	68.8	56.8	54.6	62.506	2300 - 4160	
	1800	588/9T	4501800W22Z588	54,596	MAQ1	5000	103	99.1	72.1	59.5	57.2	69.381	2300 - 4160	
	1200	588/9T	4501200W22Z588	64,887	MAQ1	5500	112	107	77.8	64.2	61.7	69.381	2300 - 4160	
500	3600	588/9TS	5003600W22Z588	74,591	MAQ1	5500	110	106	76.8	63.3	60.9	62.506	2300 - 4160	
	1800	588/9T	5001800W22Z588	57,610	MAQ1	5500	116	111	80.6	66.5	63.9	69.381	2300 - 4160	
	1200	588/9T	5001200W22Z588	68,469	MAQ1	5500	125	120	87.2	72.0	69.2	69.381	2300 - 4160	*
550	3600	588/9TS	5503600W22Z588	75,819	MAQ1	5500	119	114	83.1	68.5	65.9	62.506	2300 - 4160	
	1800	588/9T	5501800W22Z588	67,442	MAQ1	5500	125	120	87.1	71.9	69.1	69.381	2300 - 4160	*
600	3600	588/9TS	6003600W22Z588	78,163	MAQ1	5500	132	127	92.0	75.9	73.0	62.506	2300 - 4160	*
	1800	588/9T	6001800W22Z588	69,528	MAQ1	5500	137	132	95.8	79.0	76.0	69.381	2300 - 4160	*

Notes:
Motor components are stocked for flexibility and quick shipment.
* SF = 1.00 and F (DT = 105K).
Pricing is F.O.B. WEG USA Warehouse – Customer responsible for freight charges from any WEG USA warehouse to desired location.

W22 Medium Voltage Motors – TEFC 6000 – 6600V
Severe Duty

HP	RPM	NEMA Frame	Catalog Number	List Price	Mult. Symbol	Approx. Shipping Weight (lbs)	FL Amps 6.0 kV	FL Amps 6.3 kV	FL Amps 6.6 kV	"C" Dimension (in.)	Voltage (V)	Notes
150	900	L447/9T	1500900W22HL447	58,458	MAQ1	3500	18.6	17.7	16.9	57.181	6000 - 6600	
175	900	588/9T	1750900W22H588	60,297	MAQ1	4500	19.4	18.4	17.6	69.381	6000 - 6600	
200	3600	L447/9TS	2003600W22HL447	48,960	MAQ1	3500	18.4	17.5	16.7	53.431	6000 - 6600	
	1800	586/7T	2001800W22H586	45,337	MAQ1	4000	18.7	17.8	17.0	61.902	6000 - 6600	
	1200	586/7T	2001200W22H586	49,639	MAQ1	4500	21.3	20.3	19.4	61.902	6000 - 6600	
	900	588/9T	2000900W22H588	61,165	MAQ1	5000	22.0	21.0	20.0	69.381	6000 - 6600	
250	3600	L447/9TS	2503600W22HL447	52,696	MAQ1	3500	22.3	21.3	20.3	53.431	6000 - 6600	
	1800	586/7T	2501800W22H586	46,997	MAQ1	4000	22.9	21.8	20.8	61.902	6000 - 6600	
	1200	588/9T	2501200W22H588	53,003	MAQ1	5000	25.1	23.9	22.8	69.381	6000 - 6600	
	900	588/9T	2500900W22H588	65,310	MAQ1	5000	27.3	26.0	24.8	69.381	6000 - 6600	
300	3600	588/9TS	3003600W22H588	54,651	MAQ1	4500	25.5	24.3	23.2	62.506	6000 - 6600	
	1800	588/9T	3001800W22H588	52,619	MAQ1	4500	26.8	25.6	24.4	69.381	6000 - 6600	
	1200	588/9T	3001200W22H588	59,345	MAQ1	5000	29.7	28.3	27.0	69.381	6000 - 6600	
	900	588/9T	3000900W22H588	73,325	MAQ1	5000	30.6	29.1	27.8	69.381	6000 - 6600	*
350	3600	588/9TS	3503600W22H588	60,776	MAQ1	5000	30.0	28.6	27.3	62.506	6000 - 6600	
	1800	588/9T	3501800W22H588	57,946	MAQ1	5000	31.6	30.1	28.7	69.381	6000 - 6600	
	1200	588/9T	3501200W22H588	62,311	MAQ1	5000	35.1	33.4	31.9	69.381	6000 - 6600	
400	3600	588/9TS	4003600W22H588	66,509	MAQ1	5000	34.5	32.9	31.4	62.506	6000 - 6600	
	1800	588/9T	4001800W22H588	63,485	MAQ1	5000	36.7	35.0	33.4	69.381	6000 - 6600	
	1200	588/9T	4001200W22H588	69,390	MAQ1	5000	40.9	39.0	37.2	69.381	6000 - 6600	*
450	3600	588/9TS	4503600W22H588	79,244	MAQ1	5000	38.0	36.1	34.5	62.506	6000 - 6600	
	1800	588/9T	4501800W22H588	67,065	MAQ1	5000	40.7	38.8	37.0	69.381	6000 - 6600	
	1200	588/9T	4501200W22H588	73,583	MAQ1	5500	45.0	42.8	40.9	69.381	6000 - 6600	*
500	3600	588/9TS	5003600W22H588	82,543	MAQ1	5500	43.0	41.0	39.1	62.506	6000 - 6600	*
	1800	588/9T	5001800W22H588	73,455	MAQ1	5500	45.2	43.1	41.1	69.381	6000 - 6600	*
550	3600	588/9TS	5503600W22H588	84,264	MAQ1	5500	47.0	44.7	42.7	62.506	6000 - 6600	*
	1800	588/9T	5501800W22H588	74,973	MAQ1	5500	48.8	46.5	44.4	69.381	6000 - 6600	*

Notes:
Motor components are stocked for flexibility and quick shipment.
* SF = 1.00 and F (DT = 105K).
Pricing is F.O.B. WEG USA Warehouse – Customer responsible for freight charges from any WEG USA warehouse to desired location.

W22 Medium Voltage 2300 – 4160V Electrical Data

Rated Output		Full Load Speed (RPM)	NEMA Frame	Locked Rotor Current		Full Load Torque Tn (lb. ft.)	Locked Rotor Torque (Tl/Tn)	Break Down Torque (Tb/Tn)	Efficiency 2300V - 4160V % of full load			Power Factor 2300V - 4160V % of full load			Moment of Inertia WK2(lb.ft2)	Approx. Weight (lb)	Approx. Sound dB(A)
HP	kW			kVA Code	Il/In				50	75	100	50	75	100			
125	90	3600	L447/9TS	H	7.3	181	1.40	2.70	90.20	91.70	92.40	0.72	0.81	0.85	29.20	2500	88
		1200	L447/9T	G	6.4	547	1.30	2.10	92.50	92.70	92.70	0.64	0.75	0.80	87.80	3000	71
		900	L447/9T	H	6.3	726	1.80	2.10	91.80	92.90	93.00	0.51	0.63	0.70	114.00	3000	66
150	110	3600	L447/9TS	H	7.3	217	1.40	2.70	91.70	92.40	93.00	0.72	0.81	0.85	29.20	3000	88
		1800	L447/9T	G	6.6	435	1.60	2.30	91.50	92.70	93.30	0.69	0.78	0.83	71.00	3000	79
		1200	L447/9T	G	6.4	657	1.30	2.10	92.80	92.90	92.90	0.67	0.77	0.81	104.00	3000	71
		900	L447/9T	J	6.5	871	2.00	2.50	92.20	93.00	93.10	0.51	0.63	0.70	128.00	3500	66
175	132	3600	L447/9TS	H	7.3	254	1.40	2.70	91.70	93.00	93.60	0.72	0.81	0.85	32.20	3000	88
		1800	L447/9T	H	6.6	508	1.60	2.30	92.00	93.20	93.80	0.71	0.80	0.84	78.50	3000	79
		1200	L447/9T	H	6.4	767	1.30	2.10	93.00	93.20	93.30	0.67	0.77	0.81	114.00	3000	71
		900	L447/9T	J	6.3	1018	1.80	2.20	92.50	93.40	93.30	0.49	0.62	0.69	138.00	3500	66
200	150	3600	L447/9TS	H	7.3	290	1.40	2.70	92.40	93.60	94.10	0.72	0.82	0.85	34.30	3000	88
		1800	L447/9T	H	6.8	580	1.60	2.30	92.60	93.80	93.80	0.71	0.80	0.84	87.80	3000	79
		1200	L447/9T	H	6.6	877	1.30	2.10	93.20	93.60	93.60	0.66	0.77	0.81	114.00	3500	71
		900	L447/9T	J	6.3	1163	1.80	2.20	92.60	93.40	93.50	0.49	0.62	0.69	138.00	3500	66
250	185	3600	L447/9TS	H	7.3	362	1.40	2.70	93.20	94.20	94.60	0.74	0.83	0.86	39.30	3500	88
		1800	L447/9T	H	6.8	725	1.60	2.30	93.40	94.30	94.50	0.71	0.80	0.84	96.30	3500	79
		1200	L447/9T	J	7.5	1088	1.90	2.60	94.00	94.20	94.30	0.57	0.69	0.76	123.00	3500	71
		900	586/7T	J	6.7	1450	1.80	2.40	93.00	94.00	94.20	0.53	0.65	0.73	299.00	4500	75
300	220	3600	L447/9TS	H	7.6	434	1.50	2.70	93.60	94.50	94.70	0.73	0.82	0.86	43.90	3500	88
		1800	L447/9T	H	7.1	870	1.80	2.70	93.80	94.60	94.70	0.71	0.80	0.84	108.00	3500	79
		1200	586/7T	J	7.2	1305	1.70	2.30	93.20	94.20	94.50	0.60	0.71	0.77	282.00	4500	77
		900	588/9T	H	6.6	1741	1.80	2.70	93.60	94.40	94.50	0.53	0.65	0.73	325.00	5000	75
350	260	3600	586/7TS	H	7.5	507	1.40	3.00	94.10	94.50	95.10	0.78	0.85	0.88	72.80	4000	89
		1800	586/7T	J	7.6	1014	2.10	2.70	93.60	94.60	95.10	0.66	0.77	0.82	183.00	4500	81
		1200	588/9T	J	7.0	1523	1.70	2.30	93.70	94.60	94.60	0.60	0.71	0.77	301.00	5000	77
		900	588/9T	J	6.8	2031	2.00	2.90	94.20	94.80	94.90	0.52	0.65	0.72	356.00	5000	75
400	300	3600	588/9TS	H	7.8	579	1.60	2.50	94.50	95.00	95.40	0.80	0.86	0.88	91.70	4500	89
		1800	588/9T	J	7.6	1158	2.10	2.70	94.00	95.00	95.10	0.70	0.80	0.84	218.00	5000	81
		1200	588/9T	J	7.2	1740	1.80	2.40	94.00	94.90	95.00	0.59	0.71	0.77	327.00	5000	77
		900	588/9T	H	6.2	2326	1.70	2.50	94.40	94.90	95.00	0.55	0.67	0.74	356.00	5500	75
450	330	3600	588/9TS	H	7.8	651	1.60	2.50	94.50	95.40	95.40	0.80	0.86	0.88	96.80	5000	89
		1800	588/9T	H	7.6	1303	2.10	2.70	94.30	95.00	95.40	0.70	0.80	0.84	233.00	5000	81
		1200	588/9T	H	6.8	1959	1.50	2.10	94.30	95.00	95.10	0.62	0.73	0.78	356.00	5500	77
500	370	3600	588/9TS	H	7.8	723	1.60	2.50	95.00	95.80	95.80	0.80	0.86	0.88	105.00	5500	89
		1800	588/9T	H	7.6	1448	2.10	2.70	94.70	95.20	95.60	0.70	0.80	0.84	255.00	5500	81
		1200	588/9T	H	6.8	2177	1.50	2.10	94.30	95.00	95.10	0.61	0.72	0.78	365.00	5500	77
550	400	3600	588/9TS	H	7.8	796	1.60	2.50	95.40	95.80	95.80	0.80	0.86	0.88	115.00	5500	89
		1800	588/9T	J	8.0	1593	2.20	2.80	94.80	95.40	95.60	0.70	0.80	0.84	255.00	5500	81
600	440	3600	588/9TS	J	8.1	868	1.70	2.50	95.40	95.80	96.20	0.78	0.85	0.87	115.00	5500	89
		1800	588/9T	H	7.6	1739	2.10	2.70	95.00	95.50	95.70	0.70	0.80	0.84	255.00	5500	81

Note: Motor data and drawings are also available at the following website: **http://ecatalog.weg.net**

W22 Medium Voltage 6000 – 6600V Electrical Data

Rated Output		Full Load Speed (RPM)	NEMA Frame	Locked Rotor Current		Full Load Torque Tn (lb. ft.)	Locked Rotor Torque (Tl/Tn)	Break Down Torque (Tb/Tn)	Efficiency 6000V - 6600V % of full load			Power Factor 6000V - 6600V % of full load			Moment of Inertia WK2(lb.ft2)	Approx. Weight (lb)	Approx. Sound dB(A)
HP	kW			kVA Code	Il/In				50	75	100	50	75	100			
150	110	900	L447/9T	M	7.8	870	2.20	2.50	90	91.6	92	0.41	0.53	0.62	131.00	3500	66
175	132	900	588/9T	K	7.8	1014	1.60	2.50	90.7	92.2	92.4	0.52	0.63	0.71	252.00	4500	75
200	150	3600	L447/9TS	K	8.5	289	1.20	2.40	91.3	92.9	93.3	0.71	0.8	0.84	35.60	3500	88
		1800	586/7T	H	7.0	580	1.20	2.10	91.2	92.6	92.9	0.72	0.8	0.83	152.00	4000	81
		1200	586/7T	K	7.8	869	1.30	2.40	91	92.5	92.8	0.6	0.67	0.73	249.00	4500	77
		900	588/9T	K	7.8	1159	1.80	2.50	90.7	92.2	92.5	0.49	0.63	0.71	266.00	5000	75
250	185	3600	L447/9TS	J	7.7	362	1.20	2.40	92.4	93.6	93.8	0.75	0.82	0.85	40.30	3500	88
		1800	586/7T	H	7.0	725	1.20	2.10	92.5	93.5	93.6	0.72	0.8	0.83	154.00	4000	81
		1200	588/9T	J	7.3	1088	1.30	2.00	92.6	93.5	93.5	0.61	0.71	0.76	268.00	5000	77
		900	588/9T	K	7.8	1449	1.80	2.50	91.8	93	93.1	0.47	0.62	0.7	287.00	5000	75
300	220	3600	588/9TS	H	7.3	434	1.20	2.00	93.4	94.3	94.3	0.82	0.85	0.88	85.40	4500	89
		1800	588/9T	H	7.0	870	1.20	2.10	92.7	93.8	93.9	0.73	0.8	0.84	192.00	4500	81
		1200	588/9T	J	7.4	1305	1.30	2.00	92.9	93.8	93.8	0.61	0.71	0.76	285.00	5000	77
		900	588/9T	H	6.7	1742	1.40	2.10	92.9	93.4	93.4	0.57	0.68	0.74	304.00	5000	75
350	260	3600	588/9TS	H	7.3	507	1.20	2.00	94.2	94.8	94.8	0.82	0.85	0.88	92.50	5000	89
		1800	588/9T	H	7.0	1014	1.20	2.10	93.4	94.3	94.4	0.73	0.8	0.84	209.00	5000	81
		1200	588/9T	K	7.8	1521	1.30	2.20	92.9	93.8	93.9	0.6	0.7	0.76	301.00	5000	77
400	300	3600	588/9TS	H	7.3	580	1.20	2.00	94.4	94.8	94.9	0.83	0.85	0.88	97.30	5000	89
		1800	588/9T	J	7.6	1158	1.20	2.10	93.7	94.5	94.6	0.73	0.79	0.83	221.00	5000	81
		1200	588/9T	K	8.4	1739	1.30	2.20	92.9	93.9	94.1	0.57	0.67	0.75	327.00	5000	77
450	330	3600	588/9TS	H	7.3	651	1.20	2.00	94.8	95.1	95.2	0.83	0.85	0.88	97.30	5000	89
		1800	588/9T	J	8.1	1302	2.00	3.00	94.1	94.7	95.1	0.66	0.77	0.82	221.00	5000	85
		1200	588/9T	K	8.4	1958	1.30	3.20	93.4	94	94.2	0.57	0.7	0.75	327.00	5500	77
500	370	3600	588/9TS	H	7.3	724	1.20	2.00	94.9	95.2	95.2	0.82	0.85	0.87	97.30	5500	89
		1800	588/9T	J	7.6	1448	1.20	2.00	93.9	94.8	94.8	0.73	0.79	0.83	233.00	5500	85
550	400	3600	588/9TS	H	7.8	796	1.30	2.00	94.9	95.3	95.3	0.8	0.84	0.86	97.30	5500	89
		1800	588/9T	H	7.6	1595	1.20	2.00	94.3	94.9	94.9	0.73	0.8	0.83	233.00	5500	85

W22 Medium Voltage Motors – TEFC

Standard Dimensions

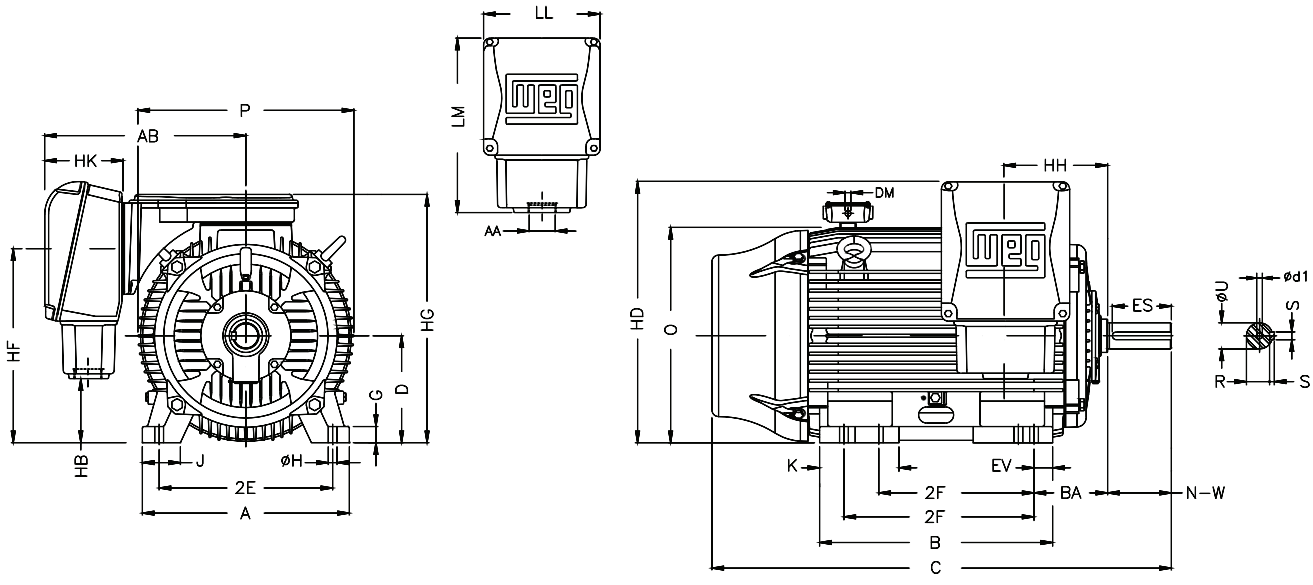

	MOUNTING														KEYWAY			SHAFT EXTENSION	
	FRAME	2E	2F	EV	H	BA	A	B	C	D	G	J	K	O	P	S	R	ES	N-W	U
NEMA	L447/9T	18.000	20.000 25.000	2.638	0.810	7.500	21.929	31.535	57.181	11.000	1.630	3.937	8.780	23.874	25.866	0.875	2.880	7.087	8.500	3.375
	L447/9TS								53.431							0.625	2.021	3.000	4.750	2.375
	586/7T	23.000	22.000 25.000	2.559	1.181	10.000	29.528	29.921	61.902	14.500	2.492	5.512	9.055	28.985	28.977	1.000	3.312	8.661	11.625	3.875
	586/7TS								55.027							0.625	2.021	3.000	4.750	2.375
	588/9T		28.000 32.000	2.756				37.980	69.381				13.030			1.000	3.312	8.661	11.625	3.875
	588/9TS								62.506							0.625	2.021	3.000	4.750	2.375

	TERMINAL BOX												BEARINGS	
	FRAME	AB	HB	HD	HF	HG	HH	HK	LL	LM	AA	DM	d1	D.E	N.D.E
NEMA	L447/9T	28.543	2.125	28.704	21.024	28.236	11.500	11.417	18.11	28.74	1 x NPT 3”	3 x NPT 3/4”	DUNC 3/4”-10	6322-C3	6319-C3
	L447/9TS													6314-C3	
	586/7T	29.330	18.673	34.537	26.732	33.346	13.386						DUNC 7/8”-9	6322-C3	6319-C3
	586/7TS												DUNC 3/4”-10	6314-C3	
	588/9T		7.807	35.346									DUNC 7/8”-9	6322-C3	6319-C3
	588/9TS												DUNC 3/4”-10	6314-C3	

Note: Motor data and drawings are also available at the following website: **http://ecatalog.weg.net**

W22 Medium Voltage Motors – TEFC
Standard Dimensions

NEMA	"FC" FLANGE DIMENSIONS IN INCHES								
	FRAME	BA	AJ	AK	BD	BF	BB	BC	AH
	L447/9T	7.500	14.000	16.000	17.910	UNC 5/8"x11	0.250	0.250	8.25
	L447/9TS								
	586/7T	10.000	14.500	16.500					11.375
	586/7TS								
	588/9T								
	588/9TS								

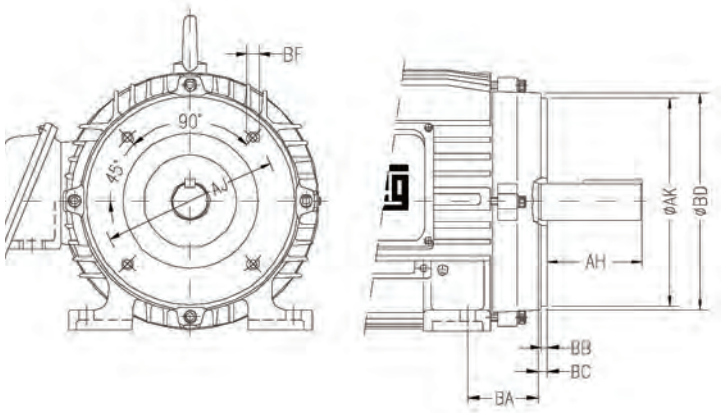

NEMA	"D" FLANGE DIMENSIONS IN INCHES						
	FRAME	BA	AJ	AK	BD	BF	BB
	L447/9T	7.500	20.000	18.000	21.650	0.828	0.203
	L447/9TS						
	586/7T	10.000	30.000	28.000	32.000		0.250
	586/7TS						
	588/9T						
	588/9TS						

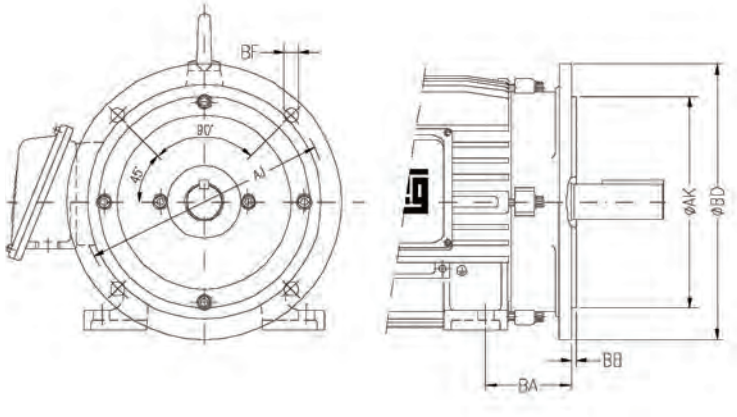

Note: Flanges are not included in standard design. Please contact your WEG representative to order.

Components Design

New Cooling System

Fan Cover
- Aerodynamic design
- Noise level reduction
- Better air flow distribution over frame
- Increased mechanical strength

Fan
- Reinforced fan hub structure
- Noise level reduction
- Increased air flow
- Fan with higher stiffness

Frame
- Reduced temperature on windings and bearings
- Noise level reduction
- Terminal box position outlet on top

Pad for vibration sensor
- Displaced 90º from each other

Enhanced Lifting Provisions
- Easier handling - horizontal & vertical
- Higher mechanical strength and handling safety

Solid feet
- More impact resistance
- Ideal for high vibration level applications

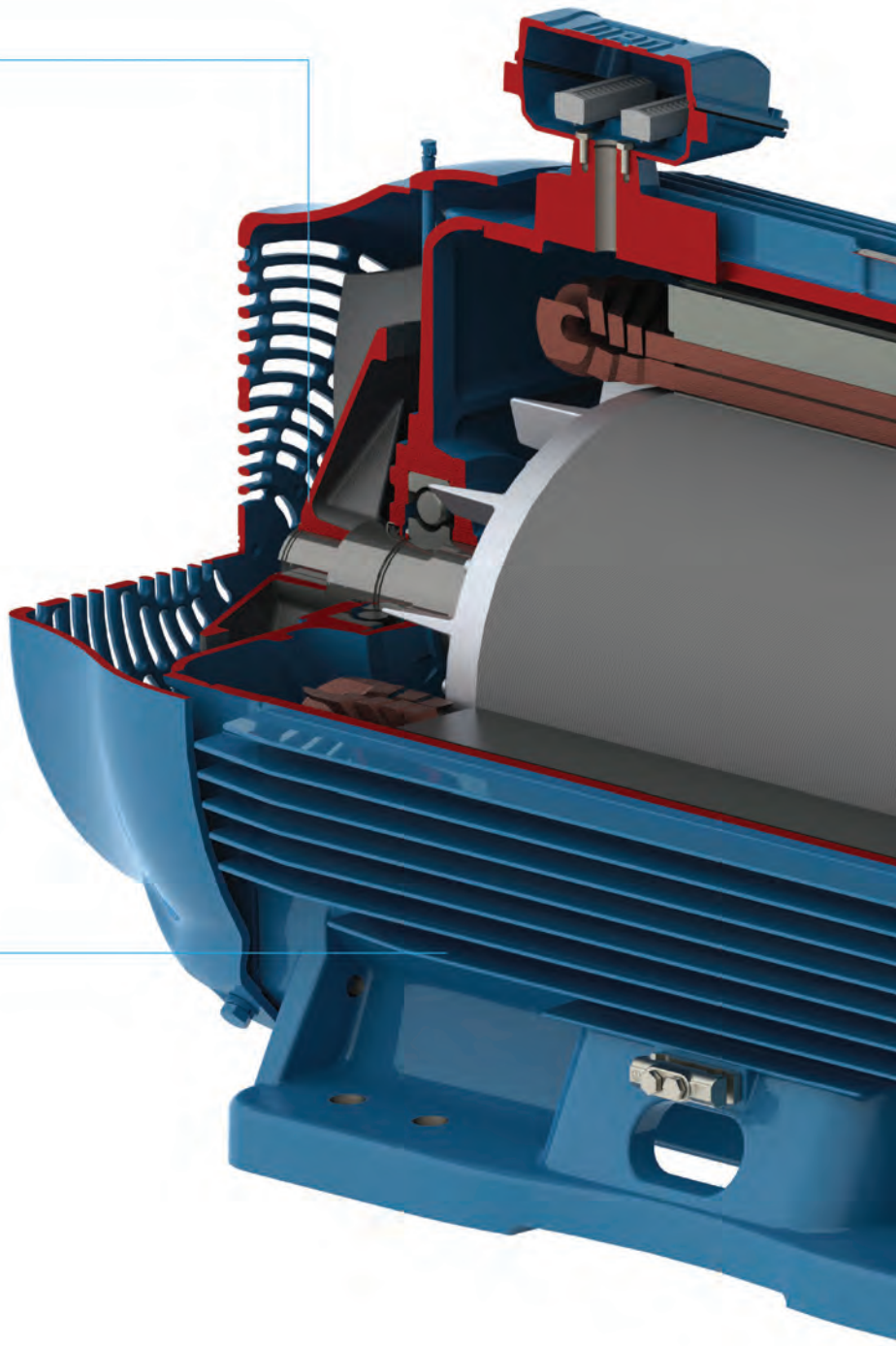

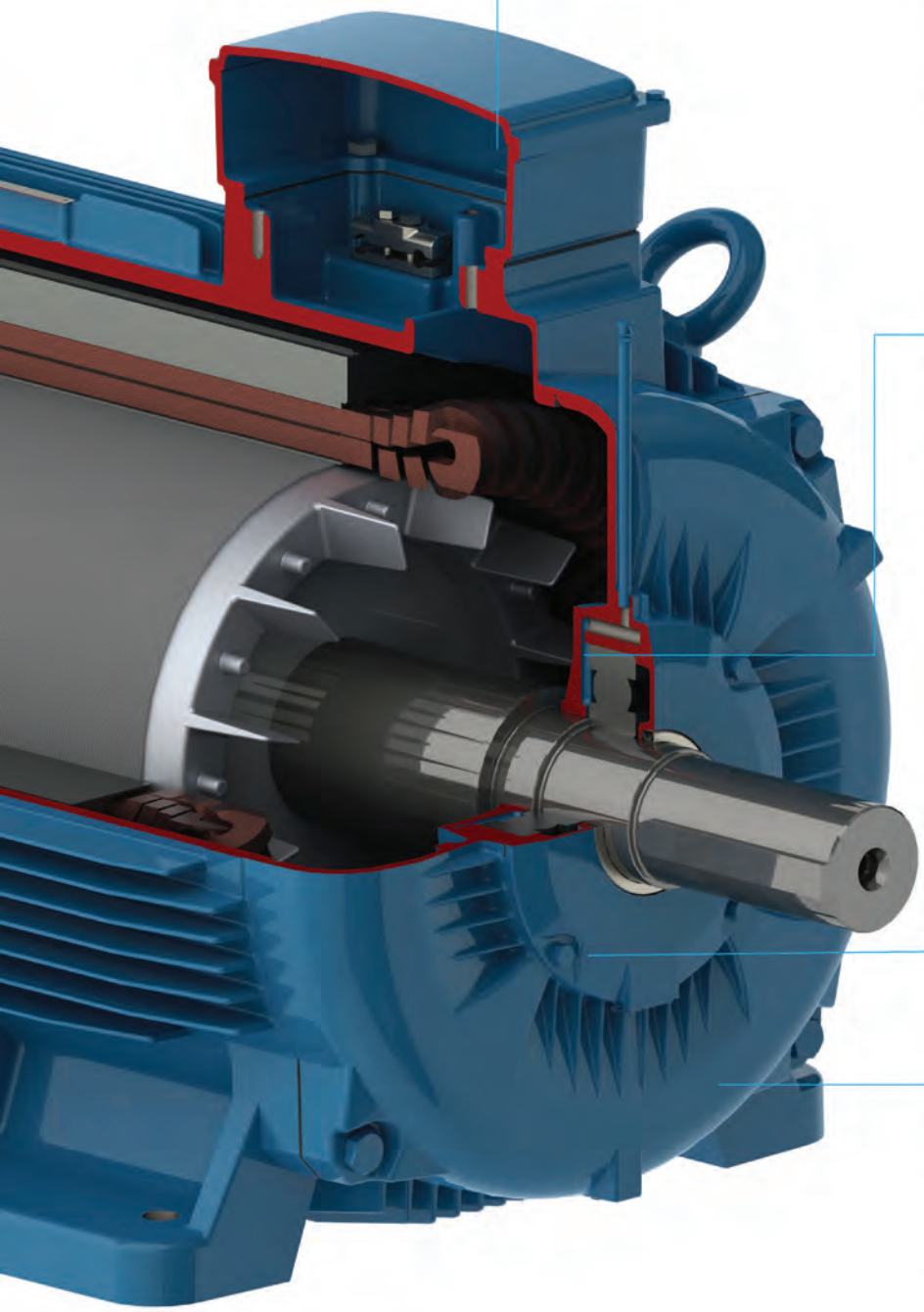

Terminal Box

- Better connection quality
- Easier cable handling during installation
- More space available for accessory installation
- Easier Maintenance
- Mounting F1/F2/F3
- Rotation on 90° stages

Bearing Caps

External

- Finned surface for improved bearing heat dissipation

Internal

- Change of grease path for positive lubrication
- Bearing lubrication quality improvement
- Reduced bearing temperature

Seal Subsystem

- Increased dust and moisture protection
- Increased protection to high-pressure cleaning

Endshields Subsystem

DE (Drive Endshield)

- New fin design
- Bearing moved outwards for better load support
- Improved bearing heat dissipation for reduced bearing temperature
- Reinforced endshield structure

NDE (Non-Drive Endshield)

- New design with smooth exterior surface
- Improved air flow
- Noise level reduction
- Improved structural rigidity for low vibration

Data subject to change without notice.

Add-On™ Modifications

WEG In-House Modification Pricing (Includes Parts and Labor)

NEMA FRAME			48 / 56 / 140T / 180T	210T	250T	280T	320T	360T	400T	440T	L440/500	580T
IEC FRAME			63 / 71 / 80 / 90 / 112	132S/M	160M/L	180M/L	200M/L	225S/M	250S/M	280S/M	315S/M	355M/L
REPLATE	ADD CUSTOMER PART NUMBER AND / OR OTHER CHANGES SUCH AS VOLTAGE, HZ, ETC.		List	List	List	List	List	List	List	List	List	List
MOD. NUMBER	NAMEPLATE											
N-10	Main Nameplate Change - Stainless Steel	NET	25	25	25	25	25	25	25	25	25	25
N-20	Additional Nameplate - Stainless Steel	NET	25	25	25	25	25	25	25	25	25	25
N-25	Additional Rating/Service - Adhesive Mylar only	NET	25	25	25	25	25	25	25	25	25	25

ELECTRICAL ADD-ON'S	INSTALLATION OF SPACE HEATERS, THERMISTORS, THERMOSTATS & EXTENDING MOTOR LEADS											
NEMA FRAME			48 / 56 / 140T / 180T	210T	250T	280T	320T	360T	400T	440T	L440/500	580T
IEC FRAME			63 / 71 / 80 / 90 / 112	132S/M	160M/L	180M/L	200M/L	225S/M	250S/M	280S/M	315S/M	355M/L
E-25	Space heater install on XP motors (use this in addition to the normal space heater charges)	LIST	810.06	810.06	810.06	810.06	810.06	810.06	810.06	810.06	810.06	810.06
E-30	120V Space Heater	LIST	199.44	201.40	292.18	293.85	293.85	296.09	386.87	391.34	391.34	395.53
E-40	240V Space Heater (Operating on 240V)	LIST	199.44	201.40	292.18	293.85	293.85	296.09	386.87	391.34	391.34	395.53
E-50	240V Space Heater (Operating on120V)	LIST	217.32	221.23	312.01	315.36	315.36	319.83	410.61	419.55	419.55	427.93
E-55	Bearing RTDS (DE and NDE)	LIST	N/A	N/A	N/A	N/A	1445.53	1445.53	1445.53	1445.53	1445.53	1445.53
E-60	Winding RTD's 100 Ohm Platinum (One Per phase - 3 lead PT100's)	LIST	1131.28	1131.28	1131.28	1131.28	1131.28	1222.07	1222.07	1222.07	1222.07	1312.85
E-70	Thermistors (One per phase @155ºC)	LIST	287.99	287.99	287.99	287.99	287.99	378.77	378.77	378.77	378.77	469.55
E-80	Thermostats (One per phase @155ºC)	LIST	167.25	167.25	287.99	287.99	287.99	378.77	378.77	378.77	378.77	445.04
E-90	Extend Leads - Connections behind Terminal Box - Price based on 4' Leads	LIST	1243.02	1243.02	1243.02	1243.02	1243.02	N/A	N/A	N/A	N/A	N/A
E-95	Provision for vibration detector (drilled and tapped)	LIST	N/A	N/A	363.13	363.13	363.13	363.13	363.13	363.13	363.13	363.13
E-100	Installation of Encoder - (Only valid for NEMA Premium 280T & above) Dynapar HSD38 1024PPR & 5/8" stub shaft	LIST	*%	*%	*%	1053.35	1053.35	1053.35	1144.13	1144.13	1144.13	1144.13
E-105	Installation of Encoder on VECTOR DUTY MOTORS (FRAMES 140- 250 - Dynapar HSD38 1024PPR with 5/8" bore)	LIST	871.79	871.79	871.79	N/A	N/A	N/A	N/A	N/A	N/A	N/A
E-110	MODIFY BRAKE RECTIFIER TO ACCEPT 460V	LIST	164.16	164.16	164.16	164.16	N/A	N/A	N/A	N/A	N/A	N/A

Data subject to change without notice.

WEG In-House Modification Pricing (Includes Parts and Labor)

ADD-ON™ MODIFICATIONS

C-FLANGE KIT	INSTALLATION OF C-FLANGE KITS											
NEMA FRAME			48 / 56 / 140T / 180T	210T	250T	280T	320T	360T	400T	440T	L440/500	580T
IEC FRAME			63 / 71 / 80 / 90 / 112	132S/M	160M/L	180M/L	200M/L	225S/M	250S/M	280S/M	315S/M	355M/L
C-80	Installation of C-FLANGE (IEC)	LIST	343.13	343.13	343.13	558.83	558.83	558.83	1530.39	1530.39	1530.39	1530.39
C-90	Installation of C-FLANGE (TEFC - GEN PRP)	LIST	302.63	302.63	302.63	558.83	558.83	558.83	1530.39	1530.39	1530.39	1530.39
C-105	Installation of C-FLANGE (IEEE-841)	LIST	471.20	471.20	471.20	602.01	602.01	602.01	1530.39	1530.39	1530.39	1530.39
C-110	Installation of C-FLANGE (XP)	LIST	406.45	406.45	406.45	852.12	852.12	852.12	1273.72	1273.72	N/A	N/A
C-120	Installation of C-FLANGE (ODP)	LIST	388.27	388.27	388.27	642.37	642.37	642.37	1222.32	1222.32	N/A	N/A

D-FLANGE KIT	INSTALLATION OF D-FLANGE KITS											
NEMA FRAME			48 / 56 / 140T / 180T	210T	250T	280T	320T	360T	400T	440T	L440/500	580T
IEC FRAME			63 / 71 / 80 / 90 / 112	132S/M	160M/L	180M/L	200M/L	225S/M	250S/M	280S/M	315S/M	355M/L
D-120	Installation of D-FLANGE (IEC)	LIST	410.64	410.64	410.64	737.43	737.43	737.43	1105.31	1105.31	1105.31	1105.31
D-130	Installation of D-FLANGE (TEFC - GEN PRP)	LIST	416.79	416.79	416.79	743.52	743.52	743.52	1448.27	1448.27	1448.27	1448.27
D-135	Installation of D-FLANGE (IEEE-841)	LIST	N/A	429.05	429.05	743.52	743.52	743.52	1448.27	1448.27	1448.27	1448.27
D-140	Installation of D-FLANGE (XP)	LIST	484.25	484.25	484.25	905.08	905.08	905.08	1286.01	1286.01	N/A	N/A
D-150	Installation of D-FLANGE (ODP)	LIST	N/A	N/A	230.73	432.96	723.46	615.89	918.32	1160.84	N/A	N/A

DRIP COVERS	INSTALLATION OF DRIP COVER (RAIN CAP)											
NEMA FRAME			48 / 56 / 140T / 180T	210T	250T	280T	320T	360T	400T	440T	L440/500	580T
IEC FRAME			63 / 71 / 80 / 90 / 112	132S/M	160M/L	180M/L	200M/L	225S/M	250S/M	280S/M	315S/M	355M/L
DC-160	Drip Cover (TEFC / XP)	LIST	254.58	277.07	320.25	363.44	406.59	484.19	681.01	825.45	1058.13	1290.78
DC-170	Drip Cover (ODP)	LIST	276.28	280.28	304.72	328.32	405.45	478.74	569.53	657.01	N/A	N/A

COOLING	ALUMINUM FAN MATERIAL CHANGE OUT AND INSTALLATION OF BLOWER KIT (FORCED VENTILATION)											
NEMA FRAME			140T / 180T	210T	250T	280T	320T	360T	400T	440T	L440/500	580T
IEC FRAME			63 / 71 / 80 / 90 / 112	132S/M	160M/L	180M/L	200M/L	225S/M	250S/M	280S/M	315S/M	355M/L
F-180	Fan Material (ALUMINUM) Note #4	LIST	1110.64	1175.11	1181.26	1273.74	1407.88	1598.52	1870.87	2188.02	2677.04	3534.36
F-190	Forced Ventilation: Blower Cooling (w/o Encoder)	LIST	1256.84	1369.69	1437.63	1482.74	1593.32	1794.69	1794.69	2183.16	2448.41	2448.41
F-195	Forced Ventilation: Blower Cooling (w/ Encoder)	LIST	4337.60	4624.41	4782.99	4952.29	4896.15	5495.06	5955.95	6552.15	6817.40	7417.96
F-200	Cast Iron Fan Cover	LIST	107.12	113.27	Standard	Standard	Standard	Standard	Standard	Standard	Standard	Standard

WEG In-House Modification Pricing (Includes Parts and Labor)

BEARINGS	BEARING CHANGE OUTS & SHAFT GROUNDING MODIFICATION											
NEMA FRAME			48 / 56 / 140T / 180T	210T	250T	280T	320T	360T	400T	440T	L440/500	580T
IEC FRAME			63 / 71 / 80 / 90 / 112	132S/M	160M/L	180M/L	200M/L	225S/M	250S/M	280S/M	315S/M	355M/L
B-200	Ball to Roller Bearing Conversion *Note #3 and #5*	LIST	N/A	N/A	527.09	616.23	618.04	913.97	1227.54	1812.35	1812.35	1812.35
B-210	Roller to Ball conversion *Note #3 and #6*	LIST	N/A	N/A	N/A	N/A	N/A	N/A	1210.34	1636.34	1636.34	1636.34
B-220	Convert to Insulated Bearing - NDE ONLY	LIST	564.72	568.44	673.10	843.94	785.64	1347.85	1347.85	1888.88	1888.88	1888.88
B-225	Convert to 2RS (sealed bearings)	LIST	210.73	215.36	277.54	312.21	346.87	835.42	1077.96	N/A	N/A	N/A
B-230	Install Aegis shaft Grounding Ring - DE ONLY	LIST	222.77	222.77	222.77	241.62	241.62	241.62	273.74	402.23	402.23	402.23
B-240	Spring Loaded Grounding Brush - DE Only	LIST	178.21	178.21	178.21	192.32	192.32	192.32	218.99	321.79	321.79	321.79
B-250	Installation of Helwig Grounding Brush (Includes Brush and Brush Holder - DE only)	LIST	N/A	1384.11	1384.11	1384.11	1384.11	1384.11	1384.11	1384.11	1384.11	1384.11
B-260	Insulated ODE End Bell conversion (TEFC 360 frames and above - W22 only)	LIST	N/A	N/A	N/A	N/A	N/A	882.09	1008.66	1307.43	1577.77	1871.59
B-270	Low Temp Bearing Grease change out (Aeroshell 22 Low Temp Grease / -50°C to 50°C) - Requires bearings change out	LIST	N/A	N/A	370.34	465.36	405.78	946.26	1036.82	1777.46	1777.46	1830.08
B-280	High Temp Bearing Grease change out (Dow Corning 44 High Temp Grease / -20°C to 90°C) - Requires Bearing Change out	LIST	N/A	N/A	370.34	465.36	405.78	946.26	1036.82	1777.46	1777.46	1830.08

MOUNTING	TERMINAL BOX											
NEMA FRAME			140T / 180T	210T	250T	280T	320T	360T	400T	440T	L440/500	580T
IEC FRAME			63 / 71 / 80 / 90 / 112	132S/M	160M/L	180M/L	200M/L	225S/M	250S/M	280S/M	315S/M	355M/L
M-280	F1 to F2 Mounting Conversion (Cast Iron 3 phase motors only)	LIST	136.17	136.17	181.56	181.56	181.56	181.56	272.35	272.35	272.35	272.35
M-290	Convert Footed Motor to Round Body (Cast Iron Only)	LIST	544.69	544.69	544.69	544.69	544.69	635.47	635.47	635.47	817.04	817.04
M-300	Auxiliary ternminal box	LIST	188.21	188.21	204.53	204.53	204.53	213.99	213.99	213.99	213.99	213.99
M-310	Dual Auxiliary Terminal Box Configuration (Seperating Temp. Sensors and Space heaters if specified)	LIST	N/A	N/A	N/A	N/A	N/A	352.01	352.01	352.01	352.01	352.01
M-320	Install terminal block in terminal box (Cast Iron 3 Phase only - leads not connected)	LIST	244.53	244.53	258.18	284.92	284.92	337.40	428.18	531.56	735.36	735.36

Notes:

1. *CONSIDER TENV VECTOR DUTY MOTOR (If rating is available) = *%*
2. *NOT AVAILABLE AS MODIFICATION = N/A*
3. *CONTACT FOR QUOTE WITH LOAD DATA FOR EVALUATION*
4. *MACHINING REQUIRED*
5. *ROLLER BEARINGS SIZES NOT AVAILABLE FOR 210T FRAMES AND SMALLER*
6. *STOCK PRODUCT NOT AVAILABLE WITH ROLLER BEARINGS BELOW NEMA 400T*

Data subject to change without notice.

WEG In-House Modification Pricing (Includes Parts and Labor)

ENVIROMENTAL	ENVIROMENTAL CONDITIONS										
NEMA FRAME			48 / 56 / 140T / 180T	210T	250T	280T	320T	360T	400T	440T	L440/500	580T
IEC FRAME			63 / 71 / 80 / 90 / 112	132S/M	160M/L	180M/L	200M/L	225S/M	250S/M	280S/M	315S/M	355M/L
EV-300	Stainless Steel Breather Drains	LIST	328.21	328.21	418.99	418.99	418.99	509.78	509.78	509.78	600.56	600.56
EV-310	Stainless Steel Hardware (Only external bolts - End bell , Terminal box cover & Fan cover)	LIST	551.68	551.68	551.68	551.68	621.51	621.51	621.51	621.51	782.12	782.12
EV-320	Grounding Provisions on Frame (TEFC cast iron only)	LIST	251.40	251.40	251.40	251.40	382.68	382.68	382.68	Standard	Standard	Standard
EV-330	Tropicalization/Anti-Fungal Protection	LIST	178.07	223.46	223.46	265.36	356.15	356.15	488.83	488.83	488.83	488.83
EV-335	IP56 Modification (GEN PRP TEFC / IEC)	LIST	1031.01	1031.01	1031.01	1031.01	1031.01	1121.79	1121.79	1121.79	1121.79	1121.79
EV-340	IP56 Modification (IEEE 841)	LIST	289.11	289.11	289.11	289.11	396.65	396.65	396.65	504.19	504.19	504.19
EV-345	IP56 Modification (XP)	LIST	1801.68	1801.68	1801.68	1801.68	1801.68	1801.68	2046.09	2046.09	2046.09	2046.09
EV-350	Sealant on Joints	LIST	198.32	198.32	198.32	198.32	305.87	305.87	305.87	413.41	413.41	413.41
EV-360	External Epoxy Paint (per below color chart only)	LIST	620.11	620.11	620.11	801.68	801.68	801.68	1240.22	1240.22	1240.22	1240.22
EV-380	Top Coat Paint Color Change (per below color chart only)	LIST	396.65	396.65	396.65	520.95	520.95	520.95	645.25	645.25	645.25	645.25

AVAIL TOP COAT COLORS

- RAL 5009 - BLUE
- MUNSELL N1 - BLACK
- RAL 6002 - GREEN
- RAL 7022 - DARK GRAY
- RAL 9010 - WHITE
- RAL 3002 - RED

Factory Built Modifications (List Price Adders)

BEARINGS

NEMA FRAME SERIES	48	56	-	140T	180T	210T	250T	280T	320T	360T	400T	440T	L440/500	580
IEC Frame Series	-	-	63 UP 80	90	100/112	132	160	180	200	225	250	280	315	355
Ball to Roller (IV, VI, VIII P.) D.E.:	n/a	n/a	n/a	n/a	n/a	566	645	772	863	974	no cost	no cost	no cost	no cost
ZZ Bearings (Double shielded): Added when manufacturing	std	std	std	std	std	std	96	321	632	n/a	n/a	n/a	n/a	n/a
2 RS Bearing (D.E. and N.D.E.) Added when manufacturing	38	38	38	38	61	67	207	293	973	1364	n/a	n/a	n/a	n/a
Insulated (Hybrid) NDE Bearing	n/a	n/a	n/a	417	671	700	2163	2318	2755	n/a	n/a	n/a	n/a	n/a
Insulated Bearing Housing NDE Endshield	n/a	n/a	n/a	n/a	n/a	n/a	n/a	n/a	n/a	1064	1239	1539	1539	2265

COOLING

NEMA FRAME SERIES	48	56	-	140T	180T	210T	250T	280T	320T	360T	400T	440T	L440/500	580
IEC FRAME SERIES			63 UP 80	90	100/112	132	160	180	200	225	250	280	315	355
Fan Material : - Aluminum Added when manufacturing	n/a	n/a	n/a	64	110	118	132	151	175	218	255	298	348	n/a
Fan Material : - Cast Iron Added when manufacturing	n/a		n/a	34	50	61	79	107	112	185	185	216	300	527
Fan Material : - Bronze Added when manufacturing	n/a	n/a	n/a	238	532	865	1068	1,493	1,508	2,627	2,627	2,627	2,627	2,971
Forced Ventilation (TEBC) :	n/a	n/a	n/a	1,406	1,513	1,575	1,965	2,286	2,448	2,921	3,139	4,275	5,773	7,383
TEAO Added when manufacturing	54	54	54	54	81	94	97	176	176	370	370	380	439	520
Drip Cover Added when manufacturing	21	21	55	55	58	82	98	141	166	191	191	234	234	330
Textile Fan Cover Added when manufacturing	n/a	n/a	n/a	61	63	90	108	156	183	220	220	n/a	n/a	n/a

DEGREE OF PROTECTION

NEMA FRAME SERIES	48	56	-	140T	180T	210T	250T	280T	320T	360T	400T	440T	L440/500	580
IEC FRAME SERIES	-	-	63 UP 80	90	100/112	132	160	180	200	225	250	280	315	355
TEFC IP55 with Lip Seal	33	33	33	33	58	76	95	113	132	151	175	213	249	502
TEFC IP55 with Oil Seal	n/a	n/a	55	55	85	104	112	133	143	171	200	231	268	-
TEFC IP55 with Labyrinth seal or Nilos Ring	n/a	n/a	196	196	220	220	299	315	354	463	511	511	579	1380
TEFC IP56 w/ Oil Seals	n/a	n/a	n/a	75	118	176	267	383	498	441	655	1724	2041	-
TEFC IP56 w/ W3Seals (labyrinth)	n/a	n/a	n/a	230	277	401	501	643	861	825	1023	2143	2674	3815
TEFC IP65 w/ Oil Seals	n/a	n/a	n/a	75	118	176	267	383	498	441	655	1724	2041	-
TEFC IP65 w/ Taconite (labyrinth) Seals	n/a	n/a	n/a	167	205	303	398	528	709	659	857	1954	2394	3366
TEFC IP65 w/ W3seals (labyrinth)	n/a	n/a	n/a	230	277	401	501	643	861	825	1023	2143	2674	3815
TEFC IP66 w/ W3seals (labyrinth)	n/a	n/a	n/a	273	344	496	662	853	1112	1185	1515	3310	4009	5687

Data subject to change without notice.

FACTORY
BUILT MODIFICATIONS

ELECTRICAL SPECIAL FEATURES

NEMA FRAME SERIES	48	56	-	140T	180T	210T	250T	280T	320T	360T	400T	440T	L440/500	580
IEC FRAME SERIES	-	-	63 UP 80	90	100/112	132	160	180	200	225	250	280	315	355
Thermistors (1 / phase) PTC: Added when manufacturing	n/a	n/a	142	142	142	142	142	142	142	142	142	142	142	142
Thermostats (1 / phase) NC: Added when manufacturing	n/a	n/a	142	142	142	142	142	142	142	142	142	142	142	142
Bearing RTD's PT100 (1/bearing) Added when manufacturing	n/a	n/a	n/a	n/a	n/a	n/a	1215	1215	1215	1215	1215	1215	1215	1215
Winding RTD's PT100 (1 / phase): Added when manufacturing	n/a	n/a	1052	1052	1052	1052	1052	1052	1052	1052	1052	1052	1052	1052
Space Heater Added when manufacturing	n/a	n/a	37	37	37	37	54	54	54	109	109	109	109	217
Class of Insulation : -"F" Added when manufacturing	Add 5% to motor list price								Add 3% to motor list price					
Class of Insulation : -"H" Added when manufacturing	Add 10% to motor price													
Epoxy varnish impregnation Added when manufacturing	Add 5% to motor price													
Above 600 V (1000 Max.) Added when manufacturing	Add 10% to motor price													

FLANGES

NEMA FRAME SERIES		48	56		140T	180T	210T	250T	280T	320T	360T	400T	440T	L440/500	580
IEC FRAMES SERIES				63 UP 80	90	100/112	132	160	180	200	225	250	280	315	355
FLANGE TYPE	Enclosure	List Price													
"C" Flange	TEFC	28	28	28	28	38	51	68	99	121	442	491	606	716	1,623
	ODP	28	28	-	34	38	51	68	85	100	394	446	560	-	-
	Explosion Proof	-	-	61	61	70	76	103	147	182	665	736	1,384	1,384	-
"D" Flange	TEFC	-	-	50	59	70	79	117	136	192	637	762	915	1,051	1,863
	ODP	-	-	-	-	-	-	107	126	170	537	685	855	-	-
	Explosion Proof	-	-	-	89	89	103	130	189	246	736	1,067	1,311	1,577	2,364

PAINTING PLANS Factory Build Adder

NEMA FRAME SERIES		140T	180T	210T	250T	280T	320T	360T	400T	440T	L440/500	580
IEC FRAMES SERIES	63 UP 80	90	100/112	132	160	180	200	225	250	280	315	355
Painting Plan	List Price											
202	45	58	94	120	196	228	246	308	335	402	447	745
203	58	85	138	188	290	344	384	509	553	696	808	1,269
211	106	114	133	228	467	547	597	775	828	1,003	1,075	1,113
212	122	133	171	277	585	692	779	1,026	1,121	1,410	1,577	1,661
Internal Epoxy Painting	45	58	94	120	196	228	246	308	335	402	447	745

Factory Built Modifications (List Price Adders)

Painting Plan Description

Painting Plan	Recommended Uses	Surface Preparation Grade	PRIMER		INTERMEDIATE		FINISH COAT		ADHERENCE GRADE ASTM
			Paint	Film Thickness (µm)	Paint	Film Thickness (µm)	Paint	Film Thickness (µm)	D-3359
201A	Non aggressive environments; Not recommended for direct exposure to solvents, alkalis and acid vapors	Sa 2 ½	Synthetic alkyd	20 – 55	-	-	Synthetic alkyd enamel	40 – 60	3B to 5B
202E	Aggressive sheltered industrial environments; Chemical, pulps and paper industries, resistant to acid steams, alkalis and solvents vapors	Sa 2 ½	Synthetic alkyd	20 - 55	Epoxy Isocyanate	20 - 30	Epoxy polyamide enamel	100 – 140	3A to 5A
202P	Aggressive sheltered or non-sheltered industrial environments; Chemical, mining, pulps and paper industries, resistant to acid steams, alkalis and solvents vapors; Indicated to food processing motors – USA and Europe	Sa 2 ½	Synthetic alkyd	20 - 55	Epoxy Isocyanate	20 - 30	1 coats Aliphatic polyurethane enamel	60 - 100	3A to 5A
203A	EnvironEnvironments low aggressiveness; Not recommended for direct exposure to solvents, alkalis and acid vapors	Sa 2 ½	Synthetic alkyd	20 – 55	Synthetic powdered alkyd	30 a 45	Synthetic alkyd enamel	30 – 45	3B to 5B
211E	Painting of equipments, structures in general subject to moderate and high aggressive level such as: pulp and paper plants, steel and iron and chemical industries	Sa 2 ½	Polyamide Epoxy	90 - 130	-	-	Polyamide Epoxy	90 - 130	3A to 5A
211P	Painting of equipments, structures in general subject to moderate and high aggressive level such as: pulp and paper plants, steel and iron and chemical industries	Sa 2 ½	Polyamide Epoxy	90 - 130	-	-	Aliphatic polyurethane enamel	65 – 90	3A to 5A
212E	Non sheltered marine environment; Resistant to acid, alkalis and solvent spills	Sa 2 ½	Zinc ethyl silicate	70 - 90	Epoxy polyamide	90 – 130	Polyamide Epoxy	90 – 130	3A to 5A
212P	Non sheltered marine environment; Resistant to acid, alkalis and solvent spills	Sa 2 ½	Zinc ethyl silicate	70 - 90	Epoxy polyamide	90 – 130	Aliphatic polyurethane enamel	65 – 90	3A to 5A

Special Shaft

NEMA FRAME SERIES	48	56		140T	180T	210T	250T	280T	320T	360T	400T	440T
IEC FRAMES SERIES			**63 UP 80**	**90**	**100/112**	**132**	**160**	**180**	**200**	**225**	**250**	**280**
Second Shaft End (standard dimension)	n/a	n/a	60	72	87	101	104	189	189	392	396	407
Threaded center hole in the shaft end:	n/a	n/a	33	33	41	51	85	136	155	std	std	std
420 Stainless steel shaft end	Add 10% to motor list price											
315 Stainless steel shaft end	Add 15% to motor list price											
Special Shaft:												
Special Shaft Diameter (Type "A" mod)	n/a	n/a	58	58	87	130	151	189	209	392	396	407
Special Shaft Length (Type "B" mod)	n/a	n/a	63	63	96	113	120	208	216	446	450	473
Special Shaft Diameter & Length (Type "C" mod)	n/a	n/a	72	72	125	141	158	249	262	574	579	628
Special Shaft Diameter, Length & Tapered (Type "D" mod)	n/a	n/a	79	79	130	156	174	271	288	646	654	716
Balance - Reduced	n/a	n/a	n/a	33	79	91	100	125	134	156	167	188
Balance - Special	n/a	n/a	n/a	58	87	133	159	180	217	250	283	317

Data subject to change without notice.

FACTORY
BUILT MODIFICATIONS

Terminal Box*

NEMA FRAME SERIES	48	56		140T	180T	210T	250T	280T	320T	360T	400T	440T
IEC FRAMES SERIES			63 UP 80	90	100/112	132	160	180	200	225	250	280
Cable Gland - Plastic:	n/a	n/a	10	10	14	14	22	22	22			
Cable Gland - Brass:	n/a	n/a	33	33	50	50	182	182	182	567	567	567
Threaded Plug :	n/a	n/a	6	6	9	9	18	18	18	22	22	22
Terminal Block (6 pin):	n/a	n/a	9	9	14	23	23	41	41	197	197	380
Additional terminal box :	n/a	n/a	n/a	30	30	41	41	41	41	59	59	59
Without Terminal Box:	n/a	n/a	18	18	22	22	33	33	33	45	45	47

* Not valid for Hazardous Locations Motors

Testing:

NEMA FRAME SERIES	48	56		140T	180T	210T	250T	280T	320T	360T	400T	440T
IEC FRAMES SERIES			63 UP 80	90	100/112	132	160	180	200	225	250	280
Routine Test - Unwitnessed			381	381	381	513	513	513	513	622	622	718
Routine Test - Witnessed			1215	1215	1215	1427	1427	1427	1427	1683	1683	1903
Type Test - Unwitnessed			586	586	586	769	769	769	769	952	952	1208
Type Test - Witnessed			1419	1419	1419	1632	1632	1632	1632	1939	1939	2195
Vibration Test			183	183	183	205	205	205	205	285	285	403
Noise Level Test			213	213	213	242	242	242	242	322	322	462

Test Description:

Routine Test

– Winding resistance check (at cold)
– Locked Rotor test (torque, current and absorbed power)
– No-load test (current and absorbed power)
– Hi-pot
– Insulation resistance
– Accessories check for continuity (if applicable)

Type Test

– Winding resistance check (at cold)
– Locked Rotor test (torque, current and absorbed power)
– Load test, including temperature rise with constant output power at full load)
– Breakdown Torque test
– No-load test (current and absorbed power)
– Vibration test on motors 364/5T and above
– Hi-pot
– Insulation resistance
– Accessories check for continuity (if applicable)

Vibration Test

– Vibration measure on as many as 6 points, depending on the mechanical envelope of the motor allowing access to all the reading points
– Test performed with half key on the shaft
– Performed with motor on an elastic mounting base (rigid base when requested)

Noise Test

– Performed at no load on an acoustic chamber
– Measurements at 1m (~ 3.3ft) distance from the motor
– Readings:
  • Total sound pressure level of the motor at 4 points, in dB(A)
  • Bearings sound pressure level in dB(A)
  • Frequency spectrum of the global noise for the point with most intense reading, at 50% and 100% of rated voltage
  • Frequency spectrum of the bearings noise for the for the point with the most intense global reading, at 50% and 100% of rated voltage

C/C-DIN FLANGES FOR TOTALLY ENCLOSED MOTORS

Nema Frames - Cast Iron - TEFC - W22

Frame	Flange Size	Bearing Size	C-Flange Kit	
			Model	List Price
143/5	FC-149	205	FLC-E140-UBC	85
182/4	FC-184	207	FLC-E180-UBC-W22	145
213/5	FC-184	308	FLC-E210-UBC	150
254/6	FC-184	309	FLC-E250-W22	195
284/6	FC-228	311	FLC-E280	290
324/5	FC-279	312	FLC-E320	440
364/5	FC-279	314	FLC-E360-314-W22	575
404/5	FC-279	314	FLC-E400-314	620
	FC-279	316	FLC-E400-316	620
444/5 445/7 447/9	FC-355	314	FLC-E440-314	830
	FC-355	319	FLC-E440-319	830
	FC-355	322	FLC-E440-322	830
L447/9	FC-355	314	FLC-EL440-314-W22	1,200
	FC-355	322	FLC-EL440-322-W22	1,200
504/5	FC-368	314	FLC-E500-314-W22	1,200
	FC-368	319	FLC-E500-319-W22	1,200
	FC-368	322	FLC-E500-322-W22	1,200
586/7	FC-368	314	FLC-E580-314	1,650
	FC-368	322	FLC-E580-322	1,650
	FC-368	324	FLC-E580-324	1,650

NEMA Frames - IEEE 841 - W22

Frame	Flange Size	Bearing Size	C-Flange Kit	
			Model	List Price
143/5	FC-149	205	FLC-IE140	250
182/4	FC-184	207	FLC-IE180-W22	285
213/5	FC-184	308	FLC-IE210	300
254/6	FC-184	309	FLC-IE250-W22	325
284/6	FC-228	311	FLC-IE280	365
324/5	FC-279	312	FLC-IE320	550
364/5	FC-279	314	FLC-E360-314-W22	575
404/5	FC-279	314	FLC-E400-314	620
	FC-279	316	FLC-E400-316	620
444/5 445/7 447/9	FC-355	314	FLC-E440-314	830
	FC-355	319	FLC-E440-319	830
	FC-355	322	FLC-E440-322	830
L447/9	FC-355	314	FLC-EL440-314-W22	1,200
	FC-355	322	FLC-EL440-322-W22	1,200
504/5	FC-368	314	FLC-E500-314-W22	1,200
	FC-368	319	FLC-E500-319-W22	1,200
	FC-368	322	FLC-E500-322-W22	1,200
586/7	FC-368	314	FLC-E580-314	1,650
	FC-368	322	FLC-E580-322	1,650
	FC-368	324	FLC-E580-324	1,650

NEMA Frames - Rolled Steel Motors (RS Models) - TEFC

Frame	Flange Size	Bearing Size	C-Flange Kit	
			Model	List Price
143/5	FC-149	205	FLC-ERS140-UBC*	85
182/4	FC-184	206	FLC-ERS180-UBC	145
W182/4	FC-184	206	FLC-ERSW180-UBC	145
213/5	FC-184	208	FLC-ERS210-UBC	150
254/6	FC-184	309	FLC-RS250	195
W254/6	FC-184	309	FLC-RSW250	195

** Model not good for motor mod. Replacement only.*

NEMA Frames - New Rolled Steel Motors (-S Models) - TEFC

Frame	Flange Size	Bearing Size	C-Flange Kit	
			Model	List Price
143/5	FC-149	205	FLC-E140-S	85
182/4	FC-184	206	FLC-E180-S	145
213/5	FC-184	208	FLC-E210-S	150
254/6	FC-184	309	FLC-E250-S	195

Data subject to change without notice.

PARTS

C/C-DIN FLANGES FOR TOTALLY ENCLOSED MOTORS

NEMA Frames - Explosion Proof Motors

Frame	Flange Size	Bearing Size	C-Flange Kit	
			Model	List Price
143/5	FC-149	205	FLC-X140	120
182/4	FC-184	307	FLC-X180	201
213/5	FC-184	308	FLC-X210	214
254/6	FC-184	309	FLC-X250	291
284/6	FC-228	311	FLC-X280	517
324/5	FC-279	312	FLC-X320	663
364/5	FC-279	314	FLC-X360-314	992
404/5	FC-279	314	FLC-X360-314	992
	FC-279	217	FLC-X400-217	1,210
444/5 445/7 447/9	FC-355	314	FLC-X440-314	1,508
	FC-355	219	FLC-X440-219	1,508
	FC-355	319	FLC-X440-319	1,508

Metric (IEC) Frames - General Purpose - TEFC

Frame	Flange Size	Bearing Size	C-DIN Flange Kit	
			Model	List Price
63	C-90	201	FLC-IM63DIN-AL	39
71	C-105	202	FLC-IM71DIN-BC-W22	43
	C-105	203	FLC-IM71DIN-AL-BC	43
80	C-120	204	FLC-IM80DIN-AL-BC	45
90	C-140	205	FLC-IM90DIN-AL-UBC	85
100	C-160	206	FLC-IM100DIN-AL-UBC	128
112	C-160	207	FLC-IM112DIN-UBC-W22	145
	C-160	307	FLC-IM112DIN-AL-UBC	145
132	C-200	308	FLC-IM132DIN-AL-UBC	150
160	C-250	309	FLC-IM160DIN-W22	195

Metric (IEC) Frames - Cast Iron - General Purpose - TEFC

Frame	Flange Size	Bearing Size	NEMA C-Flange Kit	
			Model	List Price
160	FC-184	309	FLC-IM160-W22	195
180	FC-228	311	FLC-IM180	290
200	FC-228	312	FLC-IM200	440
225	FC-279	314	FLC-E360-314-W22	575
250	FC-279	314	FLC-E440-314	620
280	FC-355	314	FLC-E440-314	830
	FC-355	316	FLC-E440-316	830
315	FC-368	314	FLC-E500-314-W22	1,030
	FC-368	319	FLC-E500-319-W22	1,030
355	FC-368	316	FLC-E580-316	1,650
	FC-368	322	FLC-E580-322	1,650

Fractional Motors - TEFC

Frame	Flange Size	Bearing Size	C-Flange Kit	
			Model	List Price
A56 B56 D56 E56 F56 G56 F143/5 G143/5	FC-149	203	FLC-E56-203-FC149	85
	FC-149	204	FLC-E56-204-FC149	85
	FC-149	205	FLC-ERS140-UBC	85

Fractional Motors - New Rolled Steel (-S MODELS) - TEFC

Frame	Flange Size	Bearing Size	C-Flange Kit	
			Model	List Price
56 56H	FC-149	203	FLC-E56-203-FC149-S	85
	FC-149	204	FLC-E56-204-S	85
	FC-149	205	FLC-E140-S	85

C FLANGES FOR OPEN MOTORS

NEMA Frames - ODP

Frame	Flange Size	Bearing Size	C-Flange Kit	
			Model	List Price
143/5	FC-149	205	FLC-0140-UBC	85
182/4	FC-184	206	FLC-0180-UBC	145
213/5	FC-184	208	FLC-0210-UBC	150
254/6	FC-184	309	FLC-0250	195
284/6	FC-228	311	FLC-0280	290
324/6	FC-279	312	FLC-0320	440
364/5	FC-279	314	FLC-0360-314	575
404/5	FC-279	314	FLC-0360-314	575
	FC-279	316	FLC-0400-316	620
444/5	FC-355	314	FLC-0440-314	830
447/9	FC-355	319	FLC-0440-319	830

NEMA Frames - New Rolled Steel (-S Models) - ODP

Frame	Flange Size	Bearing Size	C-Flange Kit	
			Model	List Price
143/5	FC-149	205	FLC-0140-S	85
182/4	FC-184	206	FLC-0180-S	145
213/5	FC-184	208	FLC-0210-S	150
254/6	FC-184	309	FLC-0250-S	195

Fractional Motors - ODP

Frame	Flange Size	Bearing Size	C-Flange Kit	
			Model	List Price
48 56	FC-95	203	FLC-048-203-FC95	85
	FC-149	203	FLC-048-203-FC149	85
A56 B56 D56 E56 F56 G56	FC-149	204	FLC-056-204-FC149	85

Fractional Motors - New Rolled Steel (-S Models) - TEFC

Frame	Flange Size	Bearing Size	C-Flange Kit	
			Model	List Price
56 56H	FC-149	203	FLC-056-203-FC149-S	85
	FC-149	204	FLC-056-204-S	85
	FC-149	205	FLC-0140-S	85

Data subject to change without notice.

PARTS

D/F FLANGE KITS

NEMA Frames - Cast Iron - TEFC - W22

Frame	Flange Size	Bearing Size	D-Flange Kit	
			Model	List Price
143/5	FD-254	205	FLD-E140-UBC	98
182/4	FD-254	207	FLD-E180-W22	171
213/5	FD-254	308	FLD-E210-UBC	184
254/6	FD-317	309	FLD-E250-W22	244
284/6	FD-317	311	FLD-E280	318
324/5	FD-406	312	FLD-E320	465
364/5	FD-406	314	FLD-E360-314-W22	620
404/5	FD-508	314	FLD-E400-314	765
	FD-508	316	FLD-E400-316	765
444/5 445/7 447/9	FD-508	314	FLD-E440-314	932
	FD-508	319	FLD-E440-319	932
	FD-508	322	FLD-E440-322	932
L447/9	FD-508	314	FLD-EL440-314-W22	1350
	FD-508	322	FLD-EL440-322-W22	1350
504/5	FD-558	314	FLD-E500-314-W22	1350
	FD-558	319	FLD-E500-319-W22	1350
	FD-558	322	FLD-E500-322-W22	1350
586/7	FD-762	314	FLD-E580-314	2130
	FD-762	322	FLD-E580-322	2130
	FD-762	324	FLD-E580-324	2130

NEMA Frames - IEEE 841

Frame	Flange Size	Bearing Size	D-Flange Kit	
			Model	List Price
213/5	FD-254	308	FLD-IE210	350
254/6	FD--317	309	FLD-IE250-W22	425
284/6	FD-317	311	FLD-IE280	490
324/5	FD-406	312	FLD-IE320	785
364/5	FD-406	314	FLD-E360-314-W22	620
404/5	FD-508	314	FLD-E400-314	765
	FD-508	316	FLD-E400-316	765
444/5 445/7 447/9	FD-508	314	FLD-E440-314	932
	FD-508	319	FLD-E440-319	932
	FD-508	322	FLD-E440-322	932
L447/9	FD-508	314	FLD-EL440-314-W22	1,030
	FD-508	322	FLD-EL440-322-W22	1,030
504/5	FD-558	314	FLD-E500-314-W22	1,030
	FD-558	319	FLD-E500-319-W22	1,030
	FD-558	322	FLD-E500-322-W22	1,030
586/7	FD-762	314	FLD-E580-314	2,604
	FD-762	322	FLD-E580-322	2,604
	FD-762	324	FLD-E580-324	2,604

D/F FLANGE KITS, *continued*

NEMA Frames - Explosion Proof Motors

Frame	Flange Size	Bearing Size	D-Flange Kit	
			Model	List Price
143/5	FD-254	205	FLD-X140	154
182/4	FD-254	307	FLD-X180	210
213/5	FD-254	308	FLD-X210	291
254/6	FD-317	309	FLD-X250	534
284/6	FD-317	311	FLD-X280	637
324/5	FD-406	312	FLD-X320	795
364/5	FD-406	314	FLD-X360-314	1,141
404/5	FD-508	314	FLD-X400-314	1,338
	FD-508	217	FLD-X400-217	1,338
444/5 445/7 447/9	FD-508	314	FLD-X440-314	1,878
	FD-508	219	FLD-X440-219	1,878
	FD-508	319	FLD-X440-319	1,878

Metric (IEC) Frames - Cast Iron - TEFC

Frame	Flange Size	Bearing Size	FF-Flange Kit	
			Model	List Price
63	FF-115	201	FLF-IM63-AL	63
71	FF-130	202	FLF-IM71-BC-W22	72
	FF-130	203	FLF-IM71-AL-BC	72
80	FF-165	204	FLF-IM80-AL-BC	96
90	FF-165	205	FLF-IM90-AL-UBC	98
100	FF-215	206	FLF-IM100-AL-UBC	169
112	FF-215	207	FLF-IM112-UBC-W22	171
	FF-215	307	FLF-IM112-AL-UBC	171
132	FF-265	308	FLF-IM132-AL-UBC	184
160	FF-300	309	FLF-IM160-W22	220
180	FF-300	311	FLF-IM180	318
200	FF-350	312	FLF-IM200	465
225	FF-400	314	FLF-IM225-W22	620
250	FF-500	314	FLF-IM250	765
280	FF-500	314	FLF-IM280-314	932
	FF-500	316	FLF-IM280-316	932
315	FF-600	314	FLF-IM315-314-W22	1,350
	FF-600	319	FLF-IM315-319-W22	1,350

Data subject to change without notice.

D FLANGES FOR OPEN MOTORS

NEMA Frames - ODP

Frame	Flange Size	Bearing Size	D-Flange Kit	
			Model	List Price
143/5	FD-254	205	-	-
182/4	FD-254	206	-	-
213/5	FD-254	208	-	-
254/6	FD-317	309	FLD-0250*	220
284/6	FD-317	311	FLD-0280	318
324/6	FD-406	312	FLD-0320	465
364/5	FD-406	314	FLD-0360-314	620
404/5	FD-508	314	FLD-0360-314	765
	FD-508	316	FLD-0400-316	765
444/5	FD-508	314	FLD-0440-314	932
447/9	FD-508	319	FLD-0440-319	932

** Only valid for Cast Iron frame*

Drip Cover Kits

	Frame	Drip Cover Kits for TEFC Motors			
		W21	W22	Rolled Steel	List Price
NEMA	A56 B56 D56 E56 F56 G56 F143/5 G143/5c	-	-	DRCV-E56	53
	140T	DRCV-E140	DRCV-E140	-	89
		-	-	DRCV-E56	53
	180T	DRCV-E180	DRCV-E180	DRCV-E180	95
	210T	DRCV-E210	DRCV-E210	DRCV-E210	131
	250T	DRCV-E250	DRCV-E250-W22	not available	152
	280T	DRCV-E280	DRCV-E280-W22	-	220
	320T	DRCV-E320	DRCV-E320-W22	-	344
	360T	DRCV-E360/400	DRCV-E360-W22	-	393
	400T	DRCV-E360/400	-	-	393
		-	DRCV-E400-W22	-	479
	440T	DRCV-E440/500	DRCV-E440-W22	-	819
	500	DRCV-E440/500	-	-	819
			DRCV-EL440-W22	-	952
	L440T	-	DRCV-EL440-W22	-	952
	580	DRCV-E580	DRCV-E580-W22	-	1,145
METRIC	90	DRCV-E140	DRCV-E140	-	89
	100	DRCV-E100	DRCV-E100	-	89
	112	DRCV-E180	DRCV-E180	-	95
	132	DRCV-E210	DRCV-E210	-	131
	160	DRCV-E250	DRCV-E250-W22	-	152
	180	DRCV-E280	DRCV-E280-W22	-	220
	200	DRCV-E320	DRCV-E320-W22	-	344
	225	DRCV-E360/400	DRCV-E360-W22	-	393
	250	DRCV-E360/400	-	-	393
		-	DRCV-E400-W22	-	479
	280	DRCV-E440/500	DRCV-E440-W22	-	819
	315	DRCV-E440/500	-	-	819
		-	DRCV-EL440-W22	-	952
	355	DRCV-E580	DRCV-E580-W22	-	1,145

Frame	Drip Cover Kits for ODP Motors	
	Model	List Price
48 56 C56 W56 A56 B56 D56 E56 F56 G56	DRCV-0S48/56	23
140T	DRCV-0DP140	105
180T	DRCV-0DP180	120
210T	DRCV-0DP210	131
250T	DRCV-0DP250	152
280T	DRCV-0DP280	220
320T	DRCV-0DP320	366
360T	DRCV-0DP360/400	410
400T	DRCV-0DP360/400	410
440T	DRCV-0DP440	613

Data subject to change without notice.

Auxiliary Terminal Boxes

For W22 only

Auxiliary Terminal Boxes are designed to be installed in the left side of the Main Terminal Box.

Frame	Auxiliary T-Box Model	List Price
140T	AUXTBOXF1W22-A	135
180T		
210T		
250T	AUXTBOXF1W22-B	171
280T		
320T		
360T	AUXTBOXF1W22-C AUXTBOXF2W22-C	270
400T		
440T		
L440T		
500		
580		

F1 and F2 on model identifies the appropriate use for the auxiliary t-box.

If separated Auxiliary Terminal boxes are required for Thermal Sensors and Space Heaters, frames 360T and above offers a second Auxilary Terminal Box just for the Space Heater. The Second Auxiliary Terminal Box for Space Heater is designed to be installed in the right side of the Main Terminal Box.

Frame	2nd Auxiliary T-Box Model	List Price
360T	AUXTBOXF1W22-D	270
400T		
440T		
L440T		
500		
580		



Two accessory terminal boxes attached to power terminal b

BLOWER KITS FOR TEFC-TO-TEBC MOTOR CONVERSION

Frame (NEMA/IEC)	W22 Blower Kit	List Price
140T/90	BLK-E140	1,149
180T/112	BLK-E180	1,260
210T/132	BLK-E210	1,452
250T/160	BLK-E250-W22	1,573
280T/180	BLK-E280	1,658
320T/200	BLK-E320	1,821
360T/225	BLK-E360-W22	2,038
400T/250	BLK-E400-W22	2,159
444/5T	BLK-E444/5-W22	2,561
445/7T 447/9T/280	BLK-E445/7-447/9-W22	2,561
500/315	BLK-EL449/500-W22	3,025
L440T/315L	BLK-EL449/500-W22	3,025
580/355	BLK-E580-W22	3,632

Encoders

- Motor requires Stub-shaft for installation of the encoder (exception to the TENV Vector Duty motors)

WEG Model	MFG Model	MFG	Specification	List Price
ECHSD38-D	HSD38102484370	Dynapar	PPR:1024/ Bore size: 5/8"/ Format: Differential Bi-Directional A/Anot,B/Bnot,Z/Znot/ Output: 5-26Vin, 5-26V differential line driver out (7272 chip set)/ Termination:10 pin MS connector/ Housing: aluminum, slotted tether with cover kit (basket). Optical	1,418
ECHS25A-A	HS25AY1CCE0DA000	Avtron	PPR:1024/ Bore size: 5/8"/ Format: Differential Bi-Directional A/Anot,B/Bnot,Z/Znot/ Output: 5-28Vin, 5-28V differential line driver out (7272 chipset)/ Termination:10 pin MS connector/ Housing: aluminum, slotted tether. Optical	1,423
ECHS35R-D	HS35R10248377	Dynapar	PPR:1024/ Bore size: 5/8"/ Format: Differential Bi-Directional A/Anot,B/Bnot,Z/Znot/ Output: 5-26Vin, 5-26V differential line driver out (7272 chip set)/ Termination:10 pin MS connector/ Housing: aluminum, slotted tether. Optical	1,418
ECHS35A-A	HS35AY1CCU0DA000	Avtron	PPR:1024/ Bore size: 5/8"/ Format: Differential Bi-Directional A/Anot,B/Bnot,Z/Znot/ Output: 5-28Vin, 5-28V differential line driver out (7272 chipset)/ Termination:10 pin MS connector/ Housing: aluminum, slotted tether. Optical	1,590
ECHS35M-A	HS35MYX6CCU0DA00	Avtron	PPR:1024/ Bore size: 5/8"/ Format: Differential Bi-Directional A/Anot,B/Bnot,Z/Znot/ Output: 5-24Vin, 5-24V differential line driver out (7272 chipset)/ Termination:10 pin connector/ Housing: aluminum, slotted tether. Magnetic	2,150

Different encoders may be available upon inquiry

TEBC Motors

Motor Frame	WEG Model	MFG Model	MFG	Specification	List Price
140T **180T**	ECKTEBC-140-180	HS35N10249WBV0	Dynapar	PPR:1024/ Bore size: 15mm/ Format: Differential Bi-Directional A/Anot,B/Bnot,Z/Znot/ Output: 5-30Vin, 5-30V HTL/ Termination:10 pin MS connector/ Optical	2,780
	ECHSD38-D	HSD38102484370	Dynapar	PPR:1024/ Bore size: 5/8"/ Format: Differential Bi-Directional A/Anot,B/Bnot,Z/Znot/ Output: 5-26Vin, 5-26V differential line driver out (7272 chip set)/ Termination:10 pin MS connector/ Housing: aluminum, slotted tether with cover kit (basket). Optical	1,418
	ECHS35R-D	HS35R10248377	Dynapar	PPR:1024/ Bore size: 5/8"/ Format: Differential Bi-Directional A/Anot,B/Bnot,Z/Znot/ Output: 5-26Vin, 5-26V differential line driver out (7272 chip set)/ Termination:10 pin MS connector/ Housing: aluminum, slotted tether. Optical	1,418
210T **250T** **280T** **320T**	ECKTEBC-210-580	HS35N10249WBWW	Dynapar	PPR:1024/ Bore size: 15mm/ Format: Differential Bi-Directional A/Anot,B/Bnot,Z/Znot/ Output: 5-30Vin, 5-30V HTL/ Termination:10 pin MS connector/ Optical	2,997
	ECHS35RTEBC-D	HS35R1024837X40	Dynapar	PPR:1024/ Bore size: 5/8"/ Format: Differential Bi-Directional A/Anot,B/Bnot,Z/Znot/ Output: 5-26Vin, 5-26V differential line driver out (7272 chip set)/ Termination:10 pin connector W/ PIGTAIL. Housing: aluminum, slotted tether.	1,845
360T **400T** **440T** **500** **580**	ECKTEBC-210-580	HS35N10249WBWW	Dynapar	PPR:1024/ Bore size: 15mm/ Format: Differential Bi-Directional A/Anot,B/Bnot,Z/Znot/ Output: 5-30Vin, 5-30V HTL/ Termination:10 pin MS connector/ Optical	2,997
	ECHS35RTEBC-D	HS35R1024837X40	Dynapar	PPR:1024/ Bore size: 5/8"/ Format: Differential Bi-Directional A/Anot,B/Bnot,Z/Znot/ Output: 5-26Vin, 5-26V differential line driver out (7272 chip set)/ Termination:10 pin connector W/ PIGTAIL. Housing: aluminum, slotted tether.	1,845
	ECHSD38-D	HSD38102484370	Dynapar	PPR:1024/ Bore size: 5/8"/ Format: Differential Bi-Directional A/Anot,B/Bnot,Z/Znot/ Output: 5-26Vin, 5-26V differential line driver out (7272 chip set)/ Termination:10 pin MS connector/ Housing: aluminum, slotted tether with cover kit (basket). Optical	1,418
	ECHS35R-D	HS35R10248377	Dynapar	PPR:1024/ Bore size: 5/8"/ Format: Differential Bi-Directional A/Anot,B/Bnot,Z/Znot/ Output: 5-26Vin, 5-26V differential line driver out (7272 chip set)/ Termination:10 pin MS connector/ Housing: aluminum, slotted tether. Optical	1,418

Data subject to change without notice.

Stub Shafts

TEFC W22 Motors

WEC Model	Applicable to W22*:	Description	List Price
STUBSHAFT-A-TEFC	140T	M8X1.25 THREAD for use with 5/8" bore encoder	220
STUBSHAFT-B-TEFC	180T 210T 250T 280T 320T	M12X1.75 Thread for use with 5/8" bore encoder	240
STUBSHAFT-C-TEFC	360T 400T 440T 580	M20X2.5 Thread for use with 5/8" bore encoder	240
STUBSHAFT-D-TEFC	L440T 500		270

IMPORTANT: These stub shafts might not be compatible with W21 motors
*General Purpose NEMA Premium W22 frames 284T and above have NDE shaft drilled and tapped to receive stub shaft. Any other will require the NDE shaft to be drilled and tapped

TENV Motors (Vector Duty)

Current design of Vector Duty motors do not require stub shaft for encoder installation. The motor is being supplied with dual flange and extented NDE shaft for this purpose (5/8" diameter)

TEBC Motors

WEC Model	Applicable to W22*:	Description	List Price
STUBSHAFT-A-TEFC	140T	M8X1.25 THREAD for use with 5/8" bore encoder	220
STUBSHAFT-B-TEFC	180T 210T 250T 280T 320T	M12X1.75 Thread for use with 5/8" bore encoder	240
STUBSHAFT-C-TEFC	360T 400T 440T L440T 500 580	M20X2.5 Thread for use with 5/8" bore encoder	240

Warning: TEFC-to-TEBC motor conversion with encoder requires NDE shaft modifications. Please consult WEG.

Encoder Cables

WEC Model	Description	List Price
ENCCBLMS-10	10 FT. ENCODER CABLE WITH 10 PIN MS CONNECTOR	232
ENCCBLMS-20	20 FT. ENCODER CABLE WITH 10 PIN MS CONNECTOR	413
ENCCBLMS-30	30 FT. ENCODER CABLE WITH 10 PIN MS CONNECTOR	454
ENCCBLMS-50	50 FT. ENCODER CABLE WITH 10 PIN MS CONNECTOR	672

Shaft Grounding Devices

Model	Description	List Price
SGB-HEL1	HELWIG CARBON SHAFT GROUNDING BRUSH HOLDER	800
SGB-HEL1B	HELWIG CARBON SHAFT GROUNDING BRUSH FOR USE WITH HOLDER PART# SGB-HEL1	550
SGB-WEG	WEG SHAFT GROUNDING BRUSH/BRUSH HOLDER	181

WEG also offers AEGIS® Shaft Grounding Rings through our Mod Shop

Insulated Bearings

Model	Size	Type	List Price
BRG6206ZZC3INS-HYBR	6206	Double Shielded C3 Clearance Hybrid	555
BRG6207ZZC3INS-HYBR	6207	Double Shielded C3 Clearance Hybrid	560
BRG6209ZZC3INS-HYBR	6209	Double Shielded C3 Clearance Hybrid	1253
BRG6211ZZC3INS-HYBR	6211	Double Shielded C3 Clearance Hybrid	1270
BRG6212ZZC3INS-HYBR	6212	Double Shielded C3 Clearance Hybrid	1291
BRG6311C3-INSOCOAT	6311	C3 Clearance Ceramic Coated	1356
BRG6312C3-INSOCOAT	6312	C3 Clearance Ceramic Coated	1676
BRG6314C3-INSOCOAT	6314	C3 Clearance Ceramic Coated	2014
BRG6316C3-INSOCOAT	6316	C3 Clearance Ceramic Coated	2339
BRG6319C3-INSOCOAT	6319	C3 Clearance Ceramic Coated	3416

Insulated Bearing Housing Endshields

Model	Frame Series	Bearing Size	List Price
NDE-E360T-314-I-W22	360T	6314	2150
NDE-E400T-314-I-W22	400T	6314	2150
NDE-E440T-314-I-W22	440T	6314	2592
NDE-E440T-316-I-W22	440T	6316	2592
NDE-E440T-319-I-W22	440T	6319	2592
NDE-EL440T-314-I-W22	L440	6314	3220
NDE-EL440T-319-I-W22	L440	6319	3220
NDE-E580-314-I-W22	580	6314	3371
NDE-E580-319-I-W22	580	6319	3371

Data subject to change without notice.

Terminal Block Kits

IEC Frames	NEMA Frames*	Model	Bolt Thread	List Price
63	-	TERMBLCK-W22-63-100	M4	35
71	-			
80	-			
90	140T			
100	-			
112	180T	TERMBLCK-W22-112/132	M5	52
132	210T			
160	250T	TERMBLCK-W22-160/180	M6	86
180	280T			
200	320T	TERMBLCK-W22-200	M8	151
225	360T	TERMBLCK-W22-225/250	M10	280
250	400T			
280	440T	TERMBLCK-W22-280	M12	533
315	500	TERMBLCK-W22-315S/M	M12	533
315L	L440T	TERMBLCK-W22-355M/L	M16	1032
355	580			

* NEMA Frames should require an adapter plate for the terminal block installation

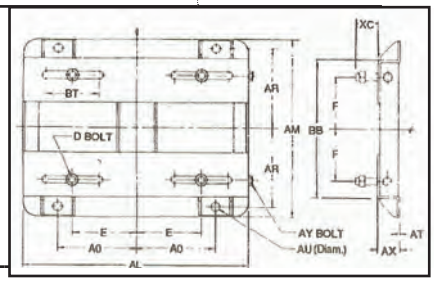

Motor Sliding Bases

Frame	Model	Style	AR	AU	BT	Shipping Weight (approx)	List Price
143T	SMB-143T	A	3 3/8	3/8	3	5	73
145T	SMB-145T	A	3 7/8	3/8	3	6	73
182T	SMB-182T	A	4 1/4	1/2	3	9	87
182T	SMB-182TA2	A2	4 1/4	1/2	3	9	120
184T	SMB-184T	A	4 3/4	1/2	3	10	87
184T	SMB-184TA2	A2	4 3/4	1/2	3	10	120
213T	SMB-213T	A	4 3/4	1/2	3 1/2	14	118
215T	SMB-215T	A	5 1/2	1/2	3 1/2	15	118
254T	SMB-254T	B2	6 5/8	5/8	4	17	220
256T	SMB-256T	B2	7 1/2	5/8	4	18	220
284T	SMB-284T	B2	7 1/2	5/8	4 1/2	21	240
286T	SMB-286T	B2	8 1/4	5/8	4 1/2	22	240
324T	SMB-324T	B2	8 1/2	3/4	5 1/4	31	321
326T	SMB-326T	B2	9 1/4	3/4	5 1/4	32	321
364T	SMB-364T	B2	9 1/8	3/4	6	44	410
365T	SMB-365T	B2	9 5/8	3/4	6	45	410
404T	SMB-404T	B2	9 7/8	7/8	7	55	600
405T	SMB-405T	B2	105/8	7/8	7	61	600
444T	SMB-444T	B2	11	7/8	7 1/2	76	746
445T	SMB-445T	B2	12	7/8	7 1/2	78	746
447T	SMB-447T	B2	13 3/4	7/8	7 1/2	89	1,023
449T	SMB-449T	B2	16 1/4	7/8	7 1/2	95	1,023
504T	SMB-504	C	12 1/2	1		108	1,422
505T	SMB-505	C	13 1/2	1		135	1,422
586T	SMB-580	Pair of Slide Rails	13	4 3/8		183	3,504

W22 Plastic Fan Guide

For "S" Standard Efficiency Level				
IEC FRAME SIZE	NEMA FRAME SIZE	POLE	MODEL	List Price
63	-	All	FAN-E63	6.00
71	-	All	FAN-E71	7.00
80	-	All	FAN-E80	8.00
90	143/5	All	FAN-FD56/140-17MM	12.00
100	-	All	FAN-E100	18.00
112	182/4	2	FAN-E180W2102P	12.00
		4/6/8	FAN-E180W2104P	19.00
132	213/5	2	FAN-E2102P	17.00
		4/6/8	FAN-E2104P	24.00
160	254/6	2	FAN-E2502P	12.00
		4/6/8	FAN-E2504P	24.00
180	284/6	2	FAN-E2802P	12.00
		4/6/8	FAN-E2804P	24.00
200	324/6	2	FAN-E3202P	18.00
		4/6/8	FAN-E3204P	27.00

For "P" High Efficiency Level				
IEC FRAME SIZE	NEMA FRAME SIZE	POLE	MODEL	List Price
63	-	All	FAN-E63	6.00
71	-	All	FAN-E71	7.00
80	-	2	FAN-E71	7.00
		4/6/8	FAN-E80	8.00
90	143/5	2/4	FAN-E80	8.00
		6/8	FAN-FD56/140-17MM	12.00
100	-	All	FAN-E100	18.00
112	182/4	2/4	FAN-E180W2102P	12.00
		6/8	FAN-E180W2104P	19.00
132S 132M	213/5	2/4	FAN-E180W2102P	12.00
		6/8	FAN-E2104P	24.00
132M/L	215/6	2/4	FAN-E180W2102P	12.00
		6	FAN-E2104P	24.00
		8	FAN-E2102P	17.00
160	254/6	2	FAN-E2502P	12.00
		4/6/8	FAN-E2504P	24.00
180	284/6	2	FAN-E2802P	12.00
		4/6/8	FAN-E2804P	24.00
200	324/6	2	FAN-E3202P	18.00
		4/6/8	FAN-E3204P	27.00

Data subject to change without notice.

W22 Plastic Fan Guide *continued*

For "T" Nema Prem. Efficiency Level				
IEC FRAME SIZE	NEMA FRAME SIZE	POLE	MODEL	List Price
63	-	All	FAN-E63	6.00
71	-	All	FAN-E71	7.00
80	-	2	FAN-E71	7.00
		4/6/8	FAN-E80	8.00
90	143/5	2/4	FAN-E80	8.00
		6/8	FAN-FD56/140-17MM	12.00
100	-	All	FAN-E100	18.00
112	182/4	2/4	FAN-E180W2102P	12.00
		6/8	FAN-E180W2104P	19.00
132S 132M	213/5	2/4	FAN-E180W2102P	12.00
		6/8	FAN-E2104P	5.60
132M/L	215/6	2/4	FAN-E180W2102P	12.00
		6	FAN-E2104P	24.00
		8	FAN-E2102P	17.00
160	254/6	2/4	FAN-E2502P	12.00
		6/8	FAN-E2504P	24.00
180	284/6	2/4	FAN-E2802P	12.00
		6/8	FAN-E2804P	24.00
200	324/6	2/4	FAN-E3202P	18.00
		6/8	FAN-E3204P	27.00

W22 Plastic Fan Guide *continued*

For "S" and "P" Stand. And High Efficiency Level (360 and up)				
IEC FRAME SIZE	NEMA FRAME SIZE	POLE	MODEL	List Price
225S/M	364/5	2	FAN-E360/4002P-W22	59.00
		4/6/8	FAN-11482642-W22	74.00
250S/M	404/5	2	FAN-E360/4002P-W22	59.00
		4/6/8	FAN-11482642-W22	74.00
280S/M	444/5 445/7 447/9	2	FAN-E444-505/2P-W22	63.00
		4/6/8	FAN-E440/500468P-W22	89.00
315S/M	504/5	2	FAN-11482679-W22	66.00
		4/6/8	FAN-E444-505/2P-W22	63.00
315L	-	2	FAN-11482679-W22	66.00
		4/6/8	N/A*	
-	L447/9	2	FAN-11482679-W22	66.00
		4/6/8	N/A*	
355M/L	586/7	2	FAN-11482679-W22	66.00
		4/6/8	N/A*	
355A/B	588/9	All	N/A*	

For "T" Nema Prem. Efficiency Level (360 and up)				
IEC FRAME SIZE	NEMA FRAME SIZE	POLE	MODEL	List Price
225S/M	364/5	2	FAN-E360/4002P-W22	59.00
		4	FAN-E444-505/2P-W22	63.00
		6/8	FAN-11482642-W22	74.00
250S/M	404/5	2	FAN-E360/4002P-W22	59.00
		4	FAN-11482679-W22	66.00
		6/8	FAN-11482642-W22	74.00
280S/M	444/5 44 5/7 447/9	2	FAN-E444-505/2P-W22	63.00
		4	FAN-11482642-W22	74.00
		6/8	FAN-E440/500468P-W22	89.00
315S/M	504/5	2	FAN-E444-505/2P-W22	63.00
		4	FAN-11482642-W22	74.00
		6/8	FAN-E440/500468P-W22	89.00
315L	-	2	FAN-11482679-W22	66.00
		4	FAN-E440/500468P-W22	89.00
		6/8	N/A*	
-	L447/9	2	FAN-11482679-W22	66.00
		4/6/8	N/A*	
355M/L	586/7	2	FAN-11482679-W22	66.00
		4	FAN-E440/500468P-W22	89.00
		6/8	N/A*	
355A/B	588/9	All	N/A*	

Data subject to change without notice.

PARTS

W22 Aluminum Fan Guide

For "S" Standard Efficiency Level				
IEC FRAME SIZE	NEMA FRAME SIZE	POLE	MODEL	List Price
63	-	All	FAN-E63-AL	55.00
71	-	All	FAN-E71-AL	70.00
80	-	All	FAN-E80-AL	88.00
90	143/5	All	FAN -E1404P-AL	116.00
100	-	All	FAN-E100-AL	161.00
112	182/4	2	FAN-E180W21024P-AL	112.00
		4/6/8	FAN-E1804P-AL-B	223.00
132	213/5	2	FAN-E210-2/8P-AL	147.00
		4/6/8	FAN-E210-4/6P-AL	313.00
160	254/6	2	FAN-E2502-4P-AL-W22	116.00
		4/6/8	FAN-E2504P-AL-B	259.00
180	284/6	2	FAN-E2802P-AL	112.00
		4/6/8	FAN-E2804P-AL-W22	161.00
200	324/6	2	FAN-E3202P-AL-W22	157.00
		4/6/8	FAN-E3204P-AL	421.00

For "P" High Efficiency Level				
IEC FRAME SIZE	NEMA FRAME SIZE	POLE	MODEL	List Price
63	-	All	FAN-E63-AL	55.00
71	-	All	FAN-E71-AL	70.00
80	-	2	FAN-E71-AL	70.00
		4/6/8	FAN-E80-AL	88.00
90	143/5	2/4	FAN-E80-AL	88.00
		6/8	FAN-E1404P-AL	116.00
100	-	All	FAN-E100-AL	161.00
112	182/4	2/4	FAN-E180W21024P-AL	112.00
		6/8	FAN-E1804P-AL-B	223.00
132S	213/5	2/4	FAN-E180W21024P-AL	112.00
		6/8	FAN-E210-4/6P-AL	313.00
132M/L	215/6	2/4	FAN-E180W21024P-AL	112.00
		6	FAN-E210-4/6P-AL	313.00
		8	FAN-E210-2/8P-AL	147.00
160	254/6	2	FAN-E2502-4P-AL-W22	116.00
		4/6/8	FAN-E2504P-AL-B	259.00
180	284/6	2	FAN-E2802P-AL	112.00
		4/6/8	FAN-E2804P-AL-W22	161.00
200	324/6	2	FAN-E3202P-AL-W22	157.00
		4/6/8	FAN-E3204P-AL	421.00

Parts - Fans

W22 Aluminum Fan Guide

For "T" Nema Premium Efficiency Level				
IEC FRAME SIZE	NEMA FRAME SIZE	POLE	MODEL	List Price
63	-	All	FAN-E63-AL	55.00
71	-	All	FAN-E71-AL	70.00
80	-	2	FAN-E71-AL	70.00
		4/6/8	FAN-E80-AL	88.00
90	143/5	2/4	FAN-E80-AL	88.00
		6/8	FAN-E1404P-AL	116.00
100	-	All	FAN-E100-AL	161.00
112	182/4	2/4	FAN-E180W21024P-AL	112.00
		6/8	FAN-E1804P-AL-B	223.00
132S 132M	213/5	2/4	FAN-E180W21024P-AL	112.00
		6/8	FAN-E210-4/6P-AL	313.00
132M/L	215/6	2/4	FAN-E180W21024P-AL	112.00
		6	FAN-E210-4/6P-AL	313.00
		8	FAN-E210-2/8P-AL	147.00
160	254/6	2/4	FAN-E2502-4P-AL-W22	116.00
		6/8	FAN-E2504P-AL-B	259.00
180	284/6	2/4	FAN-E2802P-AL	112.00
		6/8	FAN-E2804P-AL-W22	161.00
200	324/6	2/4	FAN-E3202P-AL-W22	157.00
		6/8	FAN-E3204P-AL	421.00

For "S" and "P" Efficiency Level (Frame sizes 360 and up)				
IEC FRAME SIZE	NEMA FRAME SIZE	POLE	MODEL	List Price
225S/M	364/5	2	FAN-E360-4002PAL-W22	205.00
		4/6/8	FAN-11101736-AL-W22	580.00
250S/M	404/5	2	FAN-E360-4002PAL-W22	205.00
		4/6/8	FAN-11101736-AL-W22	580.00
280S/M	444/5 445/7 447/9	2	FAN-11101737-AL-W22	58.20
		4/6/8	FAN-W22-11101738-AL	220.10
315S/M	504/5	2	FAN-W22-11101739-AL	68.60
		4/6/8	FAN-W22-11101738-AL	220.10
315L	-	2	FAN-W22-11101739-AL	68.60
		4/6/8	FAN-W22-11101744-AL	498.70
-	L447/9	2	FAN-W22-11101739-AL	68.60
		4/6/8	FAN-W22-11101744-AL	498.70
355M/L	586/7	2	FAN-W22-11101739-AL	68.60
		4	FAN-W22-11101744-AL	498.70
		6/8	FAN-11101746-AL-W22	804.10
355A/B	588/9	2	11272463	124.70
		4	FAN-W22-11101744-AL	498.70
		6/8	FAN-11101746-AL-W22	804.10

Data subject to change without notice.

For "T" Nema Prem. Efficiency Level(Frame sizes 360 and up)				
IEC FRAME SIZE	NEMA FRAME SIZE	POLE	MODEL	List Price
225S/M	364/5	2	FAN-E360-4002PAL-W22	205.00
		4	FAN-11101737-AL-W22	58.20
		6/8	FAN-11101736-AL-W22	580.00
250S/M	404/5	2	FAN-E360-4002PAL-W22	205.00
		4	FAN-W22-11101739-AL	68.60
		6/8	FAN-11101736-AL-W22	580.00
280S/M	444/5 445/7 447/9	2	FAN-11101737-AL-W22	58.20
		4	FAN-11101736-AL-W22	580.00
		6/8	FAN-W22-11101738-AL	220.10
315S/M	504/5	2	FAN-11101737-AL-W22	58.20
		4	FAN-11101736-AL-W22	580.00
		6/8	FAN-W22-11101738-AL	220.10
315L	-	2	FAN-W22-11101739-AL	68.60
		4	FAN-W22-11101738-AL	220.10
		6/8	FAN-W22-11101744-AL	498.70
-	L447/9	2	FAN-W22-11101739-AL	68.60
		4/6/8	FAN-W22-11101744-AL	498.70
355M/L	586/7	2	FAN-W22-11101739-AL	68.60
		4	FAN-W22-11101738-AL	220.10
		6/8	FAN-11101746-AL-W22	804.10
355A/B	588/9	2	11272463	124.70
		4	FAN-W22-11101744-AL	498.70
		6/8	FAN-11101746-AL-W22	3457.00

LEFT PAGE OF SECTION B TOC GOES HERE

SECTION B

Electrical Data

Wiring Diagrams

Single-Phase Wiring Diagrams B-3
Single-Phase Wiring Diagrams B-4
Three-Phase Wiring Diagrams B-5
W22 TEFC - Cast Iron - Three Phase - NEMA Premium B-6
TEFC - Rolled Steel - Three Phase - NEMA Premium B-17
ODP - Three Phase - NEMA Premium B-18
ODP High Efficiency B-22
TEFC - Explosion Proof - High Efficiency B-26
TEFC - Explosion Proof - NEMA Premium B-28
W22 TEFC - Crusher Duty - High Efficiency B-32
IEC TRU-METRIC™ - THREE PHASE (IE2) B-34
IEC TRU-METRIC™ - THREE PHASE - Aluminum Frame B-42
IEC TRU-METRIC™ - THREE PHASE - Cast Iron Frame B-44
W22 TEFC - Cast Iron - Three Phase - SUPER Premium B-49
W22 TEFC - Cast Iron - Three Phase - High Efficiency B-52
W21 TEFC - Cast Iron - Three Phase - High Efficiency B-56
TEFC - Single Phase B-59
ODP - Single Phase B-62
ODP - Single Phase - Integral Frames B-65
ODP - Split Phase B-65
TEFC - Three Phase - Fractional Motors B-66
ODP - Three Phase - Fractional Motors B-66
ODP - Jet Pump Motors - Single Phase B-68
TEFC - Jet Pump Motors - Single Phase B-69
ODP - Pool & Spa - Single Phase - Start Capacitor - Low Service Factor B-70
ODP - Pool & Spa - Single Phase - Start Capacitor - High Service Factor B-70
TEFC - Single Phase - Definite Purpose B-71
FARM DUTY Motors - Poultry Fan B-72
FARM DUTY Motors - Auger Drive B-72
Cooling Tower Motors – Three-Phase - Double Speed B-73
OIL WELL PUMPING – ODP B-75
OIL WELL PUMPING – TEFC B-76

Continued on next page

SECTION B — Electrical Data

ODP - Single Phase - Compressor Duty B-77
SAW ARBOR MOTORS B-78
VECTOR DUTY MOTORS B-79
WASH DOWN DUTY – SHARK™ – STAINLESS STEEL B-80
ATEX MOTORS, TEFC – Exn-A – IE3 . . . . . B-82
ATEX MOTORS, TEFC – Exn-A – IE2 . . . . . B-86
ATEX MOTORS, TEFC – Exd – IE2 . . . . . B-91

Data subject to change without notice.

Single-Phase Wiring Diagrams

ALWAYS USE WIRING DIAGRAM SUPPLIED ON MOTOR NAMEPLATE

FOR MOTORS WITH THERMAL PROTECTION

Single Voltage / Single Rotation

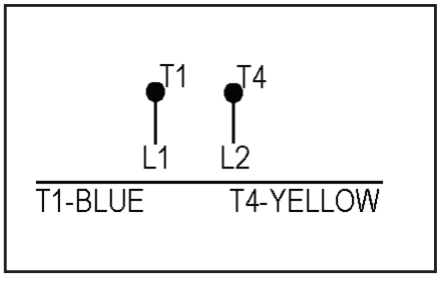

Single Voltage / Reversible Rotation

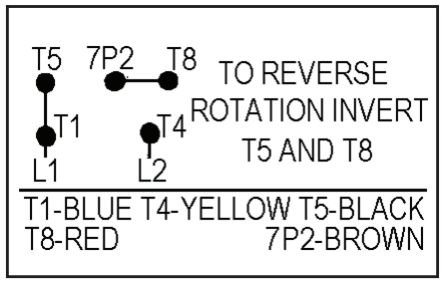

Dual Voltage / Single Rotation

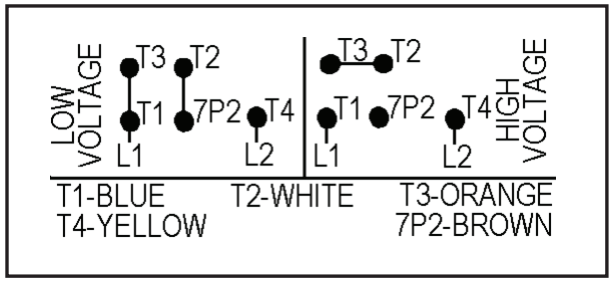

Dual Voltage / Reversible Rotation

Split-Phase Motor

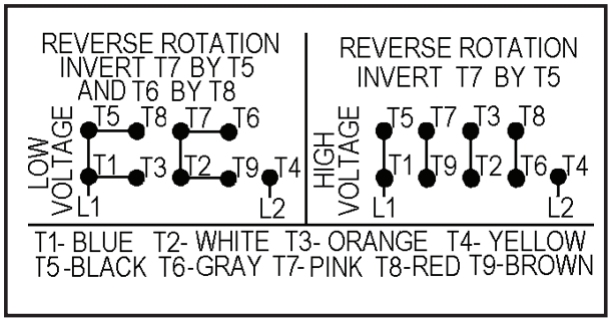

Capacitor Motor

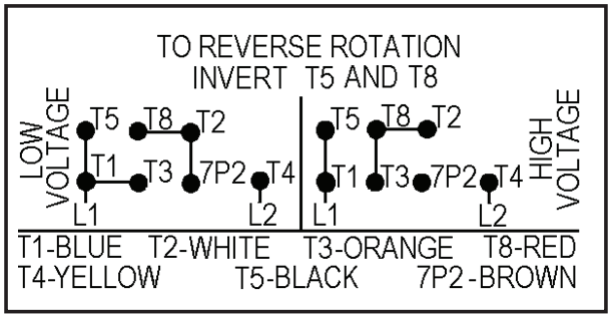

Single-Phase Wiring Diagrams

ALWAYS USE WIRING DIAGRAM SUPPLIED ON MOTOR NAMEPLATE

FOR MOTORS WITHOUT THERMAL PROTECTION

Single Voltage / Single Rotation

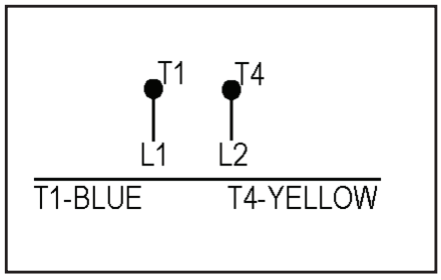

Single Voltage / Reversible Rotation

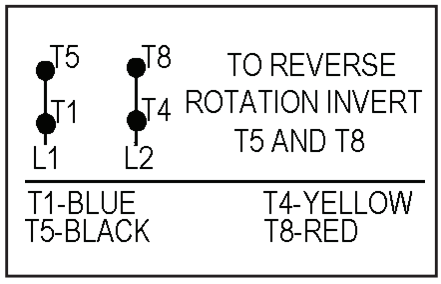

Dual Voltage / Single Rotation

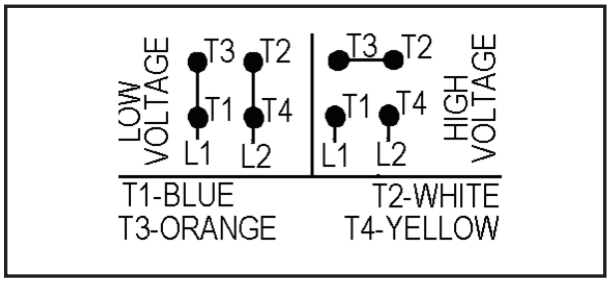

Dual Voltage / Reversible Rotation

Split-Phase Motor

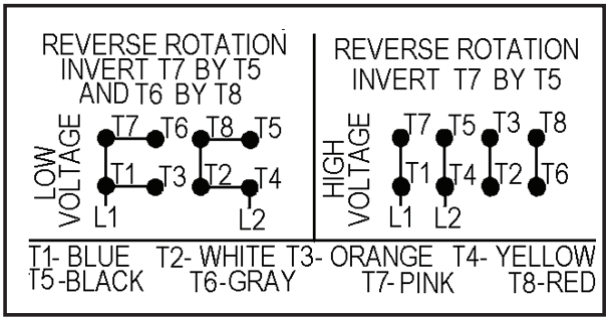

Capacitor Motor

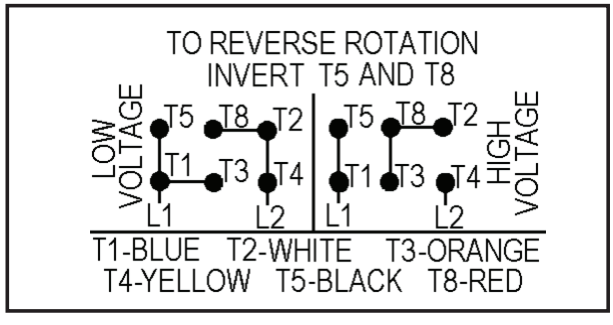

Data subject to change without notice.

Three-Phase Wiring Diagrams

ALWAYS USE WIRING DIAGRAM SUPPLIED ON MOTOR NAMEPLATE

- colored leads are only applicable on the NEW ROLLED STEEL motor lines -

Description	Wiring Diagram
9 leads Valid for voltage Code: E Frames 56 and 143/5	DOL 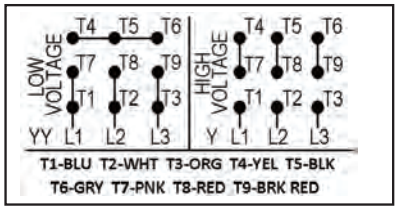
9 leads Valid for voltage Codes: E Frames 182/4 and 213/5 for E code Frames 143/5 through 213/5 for V code	DOL 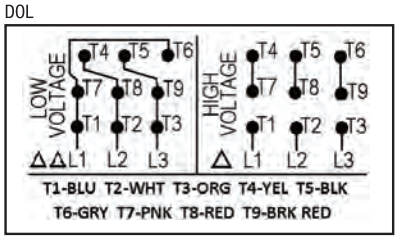
12 leads Valid for voltage Codes: E & V Frames 254/6 and above for E voltage code All Frames for V voltage code Motors are capable of WYE/Delta start Motors are capable of part-winding start at the low voltage	WYE -DELTA - LOW VOLTAGE 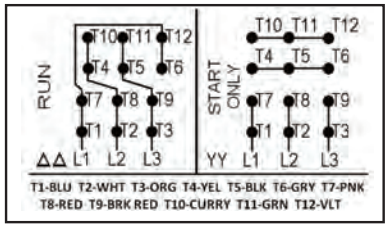 WYE -DELTA - HIGH VOLTAGE 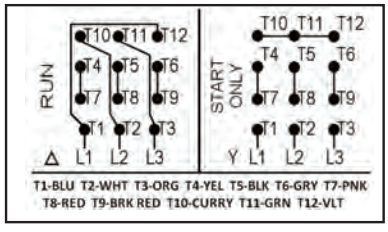
12 leads Valid for voltage Code: G Frames 254/6 and above Motors are capable of WYE/Delta start Motors are capable of part-winding start	WYE -DELTA - LOW VOLTAGE 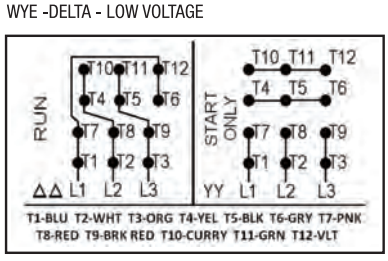 PART-WINDING 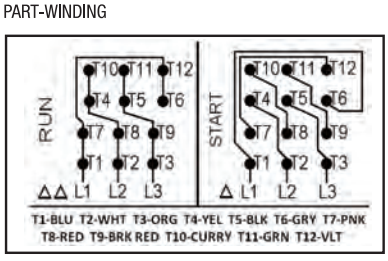
6 leads Valid for voltage Code: J, H, P, Q, W & Y All frames Q code can also have only 3 leads	WYE - DELTA 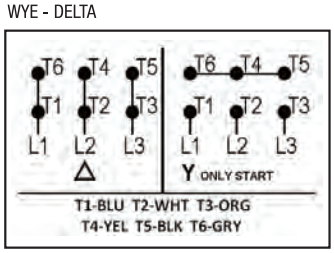 WYE - DELTA (METRIC) 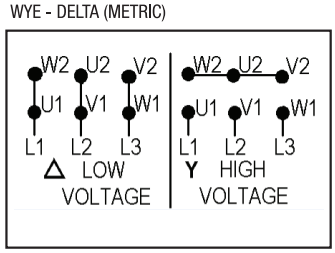
3 leads Valid for voltage Code: Q All frames Q code, non IEEE-841 motors, can also have 6 leads	DOL 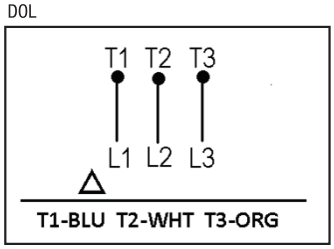

W22 TEFC - Cast Iron - Three Phase - NEMA Premium

Valid for lines:

THREE-PHASE GENERAL PURPOSE and SEVERE DUTY MOTORS
TEFC – Foot Mount
TEFC – C-Flange – Foot Mount
TEFC – C-Flange – Footless

COOLING TOWER - THREE PHASE
TEFC - Three-Phase - Foot Mount - NEMA Premium
TEAO - Three-Phase - Foot Mount - NEMA Premium

CLOSE-COUPLE PUMP - THREE PHASE - TYPE JM & JP
TEFC – NEMA Premium

CRUSHER DUTY - THREE PHASE
TEFC - Foot Mount - NEMA Premium

IEEE 841 - Three-Phase
TEFC - Foot Mount - NEMA Premium
TEFC - C-Flange - Foot Mount - NEMA Premium
TEFC - C-Flange - Footless - NEMA Premium

Output		Rated Speed (rpm)	Frame	Full Load Torque (ft.lb)	LockedRotor Current		Locked Rotor Torque Tl/Tn	Break-down Torque Tb/Tn	Inertia J (lb-ft2)	Allowable locked rotor time (s)		Weight (lb)	Sound dB(A)	Service Factor	460 V								
															% of full load							
															Rated speed (rpm)	Efficiency			Power Factor			Full load current In (A)
HP	kW				Code	II/In				Hot	Cold					50	75	100	50	75	100	
1	0.75	3495	143T	1.48	L	8.2	2.8	3.4	0.0332	22	48	36.4	68.0	1.25	3495	74.0	77.0	78.5	0.69	0.79	0.84	1.43
		3495	143/5T	1.48	L	8.2	2.8	3.4	0.0332	22	48	36.4	68.0	1.25	3495	74.0	77.0	78.5	0.69	0.79	0.84	1.43
		1760	143/5T	2.94	L	8.4	2.8	3.5	0.1172	18	40	40.8	51.0	1.25	1760	80.0	84.0	85.5	0.60	0.70	0.78	1.41
		1760	143T	2.94	L	8.4	2.8	3.5	0.1172	18	40	40.8	51.0	1.25	1760	80.0	84.0	85.5	0.60	0.70	0.78	1.41
		1150	143/5T	4.51	K	6.2	3.0	3.0	0.1595	28	62	52.9	49.0	1.25	1150	77.0	82.0	82.5	0.45	0.57	0.66	1.73
		1150	145T	4.51	K	6.2	3.0	3.0	0.1595	28	62	52.9	49.0	1.25	1150	77.0	82.0	82.5	0.45	0.57	0.66	1.73
		875	182T	5.92	M	6.0	3.0	3.5	0.3991	22	48	94.8	50.0	1.25	875	74.0	77.0	78.5	0.32	0.42	0.52	2.30
1.5	1.1	3490	143/5T	2.23	L	8.9	3.5	3.8	0.0470	21	46	40.8	68.0	1.25	3490	81.5	84.0	84.0	0.72	0.82	0.86	1.91
		3490	143T	2.23	L	8.9	3.5	3.8	0.0470	21	46	40.8	68.0	1.25	3490	81.5	84.0	84.0	0.72	0.82	0.86	1.91
		3490	145T	2.23	L	8.9	3.5	3.8	0.0470	21	46	40.8	68.0	1.25	3490	81.5	84.0	84.0	0.72	0.82	0.86	1.91
		1755	143/5T	4.43	K	8.3	2.5	3.4	0.1431	14	31	48.5	51.0	1.25	1755	82.5	85.5	86.5	0.60	0.70	0.79	2.02
		1755	145T	4.43	K	8.3	2.5	3.4	0.1431	14	31	48.5	51.0	1.25	1755	82.5	85.5	86.5	0.60	0.70	0.79	2.02
		1165	182T	6.67	M	8.0	3.2	4.0	0.4879	16	35	70.3	52.0	1.25	1165	84.0	86.5	87.5	0.45	0.56	0.66	2.39
		860	182/4T	9.04	J	5.5	2.5	2.6	0.5766	17	37	111	50.0	1.25	860	80.0	82.5	82.5	0.43	0.54	0.62	2.70
		860	184T	9.04	J	5.5	2.5	2.6	0.5766	17	37	111	50.0	1.25	860	80.0	82.5	82.5	0.43	0.54	0.62	2.70
2	1.5	3530	182T	2.94	M	9.8	2.9	4.8	0.1718	47	103	86.0	69.0	1.25	3530	78.5	84.0	85.5	0.68	0.79	0.84	2.62
		3480	143/5T	2.98	L	8.9	3.5	3.8	0.0605	17	37	51.8	68.0	1.25	3480	82.5	85.5	85.5	0.71	0.80	0.86	2.56
		3480	145T	2.98	L	8.9	3.5	3.8	0.0605	17	37	51.8	68.0	1.25	3480	82.5	85.5	85.5	0.71	0.80	0.86	2.56
		1750	143/5T	5.92	J	7.5	2.4	3.0	0.1561	11	24	50.7	51.0	1.25	1750	84.0	86.5	86.5	0.66	0.78	0.84	2.61
		1750	145T	5.92	J	7.5	2.4	3.0	0.1561	11	24	50.7	51.0	1.25	1750	84.0	86.5	86.5	0.66	0.78	0.84	2.61
		1165	182/4T	8.89	L	7.5	3.0	3.0	0.6210	31	68	87.5	52.0	1.25	1165	86.5	88.5	88.5	0.46	0.58	0.66	3.23
		870	213T	11.9	M	7.6	2.4	2.9	1.79	39	86	149	52.0	1.25	870	82.5	84.0	85.5	0.45	0.55	0.65	3.39

Continued on next page

Data subject to change without notice.

W22 TEFC - Cast Iron - Three Phase - NEMA Premium Continued

Valid for lines:

THREE-PHASE GENERAL PURPOSE and SEVERE DUTY MOTORS
TEFC – Foot Mount
TEFC – C-Flange – Foot Mount
TEFC – C-Flange – Footless

COOLING TOWER - THREE PHASE
TEFC - Three-Phase - Foot Mount - NEMA Premium
TEAO - Three-Phase - Foot Mount - NEMA Premium

CLOSE-COUPLE PUMP - THREE PHASE - TYPE JM & JP
TEFC – NEMA Premium

CRUSHER DUTY - THREE PHASE
TEFC - Foot Mount - NEMA Premium

IEEE 841 - Three-Phase
TEFC - Foot Mount - NEMA Premium
TEFC - C-Flange - Foot Mount - NEMA Premium
TEFC - C-Flange - Footless - NEMA Premium

Output		Rated Speed (rpm)	Frame	Full Load Torque (ft.lb)	LockedRotor Current		Locked Rotor Torque Tl/Tn	Break-down Torque Tb/Tn	Inertia J (lb-ft2)	Allowable locked rotor time (s)		Weight (lb)	Sound dB(A)	Service Factor	460 V							
															Rated speed (rpm)	% of full load						Full load current In (A)
																Efficiency			Power Factor			
HP	kW				Code	Il/In				Hot	Cold					50	75	100	50	75	100	
3	2.2	3510	182	4.43	K	8.3	2.4	3.8	0.1889	41	90	88.2	69.0	1.25	3510	82.5	86.5	86.5	0.75	0.84	0.88	3.63
		3510	182T	4.43	K	8.3	2.4	3.8	0.1889	41	90	88.2	69.0	1.25	3510	82.5	86.5	86.5	0.75	0.84	0.88	3.63
		3510	182/4T	4.43	K	8.3	2.4	3.8	0.1889	41	90	88.2	69.0	1.25	3510	82.5	86.5	86.5	0.75	0.84	0.88	3.63
		3510	184T	4.43	K	8.3	2.4	3.8	0.1889	41	90	88.2	69.0	1.25	3510	82.5	86.5	86.5	0.75	0.84	0.88	3.63
		3510	L184T	4.43	K	8.3	2.4	3.8	0.1889	41	90	88.2	69.0	1.25	3510	82.5	86.5	86.5	0.75	0.84	0.88	3.63
		3460	143/5T	4.49	J	8.1	3.3	3.6	0.0605	14	31	51.8	68.0	1.25	3460	85.5	86.5	86.5	0.70	0.81	0.86	3.71
		1760	182T	8.83	K	8.1	2.3	3.4	0.3401	23	51	90.4	56.0	1.25	1760	86.5	88.5	89.5	0.61	0.73	0.79	3.88
		1760	182/4T	8.83	K	8.1	2.3	3.4	0.3401	23	51	90.4	56.0	1.25	1760	86.5	88.5	89.5	0.61	0.73	0.79	3.88
		1760	184T	8.83	K	8.1	2.3	3.4	0.3401	23	51	90.4	56.0	1.25	1760	86.5	88.5	89.5	0.61	0.73	0.79	3.88
		1170	213T	13.3	K	7.0	2.0	2.8	1.20	58	128	121	55.0	1.25	1170	86.5	88.5	89.5	0.50	0.63	0.70	4.41
		1170	213/5T	13.3	K	7.0	2.0	2.8	1.20	58	128	121	55.0	1.25	1170	86.5	88.5	89.5	0.50	0.63	0.70	4.41
		865	213/5T	18.0	K	6.8	2.3	2.8	2.11	44	97	176	52.0	1.25	865	84.0	85.5	85.5	0.50	0.63	0.71	4.56
		865	215T	18.0	K	6.8	2.3	2.8	2.11	44	97	176	52.0	1.25	865	84.0	85.5	85.5	0.50	0.63	0.71	4.56
5	3.7	3500	182/4T	7.40	H	7.5	2.3	3.5	0.2233	25	55	88.2	69.0	1.25	3500	86.5	88.5	88.5	0.76	0.85	0.89	5.90
		3500	184T	7.40	H	7.5	2.3	3.5	0.2233	25	55	88.2	69.0	1.25	3500	86.5	88.5	88.5	0.76	0.85	0.89	5.90
		1765	213T	14.7	J	7.1	2.3	3.2	1.07	20	44	132	58.0	1.25	1765	88.5	89.5	89.5	0.64	0.75	0.81	6.41
		1755	182/4T	14.8	J	7.5	2.3	3.2	0.4003	15	33	94.8	56.0	1.25	1755	88.5	89.5	89.5	0.62	0.74	0.80	6.45
		1755	184	14.8	J	7.5	2.3	3.2	0.4003	15	33	94.8	56.0	1.25	1755	88.5	89.5	89.5	0.62	0.74	0.80	6.45
		1755	184T	14.8	J	7.5	2.3	3.2	0.4003	15	33	94.8	56.0	1.25	1755	88.5	89.5	89.5	0.62	0.74	0.80	6.45
		1160	213/5T	22.3	J	6.6	1.9	2.4	1.47	57	125	162	55.0	1.25	1160	88.5	89.5	89.5	0.58	0.70	0.76	6.83
		1160	215T	22.3	J	6.6	1.9	2.4	1.47	57	125	162	55.0	1.25	1160	88.5	89.5	89.5	0.58	0.70	0.76	6.83
		880	254T	29.4	H	5.3	1.9	2.5	3.41	44	97	258	54.0	1.25	880	85.5	87.5	87.5	0.49	0.62	0.70	7.58
		880	254/6T	29.4	H	5.3	1.9	2.5	3.41	44	97	258	54.0	1.25	880	85.5	87.5	87.5	0.49	0.62	0.70	7.58
7.5	5.5	3520	213/5T	11.0	H	7.2	2.1	3.0	0.4665	27	59	139	72.0	1.25	3520	87.5	89.5	89.5	0.75	0.84	0.88	8.76
		3520	213T	11.0	H	7.2	2.1	3.0	0.4665	27	59	139	72.0	1.25	3520	87.5	89.5	89.5	0.75	0.84	0.88	8.76
		3485	182/4T	11.1	J	8.2	2.7	3.3	0.2242	17	37	92.6	69.0	1.25	3485	88.5	89.5	89.5	0.75	0.84	0.88	8.76
		1765	213/5T	22.0	H	7.1	2.2	3.1	1.34	20	44	154	58.0	1.25	1765	89.5	91.0	91.7	0.66	0.77	0.83	9.00
		1765	213T	22.0	H	7.1	2.2	3.1	1.34	20	44	154	58.0	1.25	1765	89.5	91.0	91.7	0.66	0.77	0.83	9.00
		1175	254/6T	33.1	H	6.8	2.5	3.0	3.92	30	66	262	59.0	1.25	1175	89.5	90.2	91.0	0.63	0.74	0.80	9.48
		1175	254T	33.1	H	6.8	2.5	3.0	3.92	30	66	262	59.0	1.25	1175	89.5	90.2	91.0	0.63	0.74	0.80	9.48
		1175	256T	33.1	H	6.8	2.5	3.0	3.92	30	66	262	59.0	1.25	1175	89.5	90.2	91.0	0.63	0.74	0.80	9.48
		880	254/6T	44.2	G	5.3	2.0	2.5	4.43	33	73	284	54.0	1.25	880	85.5	87.5	87.5	0.50	0.63	0.71	11.1
		880	284T	44.2	G	5.6	2.0	2.4	7.20	34	75	344	54.0	1.25	880	87.5	88.5	88.5	0.60	0.72	0.78	10.0
		880	284TS	44.2	G	5.6	2.0	2.4	7.20	34	75	344	54.0	1.25	880	87.5	88.5	88.5	0.60	0.72	0.78	10.0

Continued on next page

W22 TEFC - Cast Iron - Three Phase - NEMA Premium continued

Valid for lines:

THREE-PHASE GENERAL PURPOSE and SEVERE DUTY MOTORS
TEFC – Foot Mount
TEFC – C-Flange – Foot Mount
TEFC – C-Flange – Footless

COOLING TOWER - THREE PHASE
TEFC - Three-Phase - Foot Mount - NEMA Premium
TEAO - Three-Phase - Foot Mount - NEMA Premium

CLOSE-COUPLE PUMP - THREE PHASE - TYPE JM & JP
TEFC – NEMA Premium

CRUSHER DUTY - THREE PHASE
TEFC - Foot Mount - NEMA Premium

IEEE 841 - Three-Phase
TEFC - Foot Mount - NEMA Premium
TEFC - C-Flange - Foot Mount - NEMA Premium
TEFC - C-Flange - Footless - NEMA Premium

Output		Rated Speed (rpm)	Frame	Full Load Torque (ft.lb)	LockedRotor Current		Locked Rotor Torque Tl/Tn	Break-down Torque Tb/Tn	Inertia J (lb-ft2)	Allowable locked rotor time (s)		Weight (lb)	Sound dB(A)	Service Factor	460 V								
																% of full load							
																Efficiency			Power Factor			Full load current In (A)	
HP	kW				Code	II/In				Hot	Cold				Rated speed (rpm)	50	75	100	50	75	100		
10	7.5	3515	213/5T	14.7	H	7.2	2.1	2.9	0.6362	24	53	163	72.0	1.25	3515	89.5	90.2	90.2	0.79	0.87	0.90	11.6	
		3515	215T	14.7	H	7.2	2.1	2.9	0.6362	24	53	163	72.0	1.25	3515	89.5	90.2	90.2	0.79	0.87	0.90	11.6	
		1760	213/5T	29.4	H	6.4	2.0	3.0	1.51	17	37	172	58.0	1.25	1760	90.2	91.7	91.7	0.66	0.77	0.83	12.4	
		1760	215T	29.4	H	6.4	2.0	3.0	1.51	17	37	172	58.0	1.25	1760	90.2	91.7	91.7	0.66	0.77	0.83	12.4	
		1175	254/6T	44.1	H	6.5	2.3	2.8	4.43	26	57	289	59.0	1.25	1175	90.2	91.0	91.0	0.63	0.74	0.80	12.9	
		1175	256T	44.1	H	6.5	2.3	2.8	4.43	26	57	289	59.0	1.25	1175	90.2	91.0	91.0	0.63	0.74	0.80	12.9	
		1175	254T	44.1	H	6.5	2.3	2.8	4.43	26	57	289	59.0	1.25	1175	90.2	91.0	91.0	0.63	0.74	0.80	12.9	
		880	284T	58.9	G	5.6	2.0	2.4	7.20	32	70	373	54.0	1.25	880	89.5	90.2	90.2	0.61	0.72	0.78	13.4	
		880	284TS	58.9	G	5.6	2.0	2.4	7.20	32	70	373	54.0	1.25	880	89.5	90.2	90.2	0.61	0.72	0.78	13.4	
15	11	3530	254T	22.0	G	6.8	2.2	2.7	1.26	25	55	236	72.0	1.25	3530	89.5	91.0	91.0	0.77	0.85	0.88	17.2	
		3530	254/6T	22.0	G	6.8	2.2	2.7	1.26	25	55	236	72.0	1.25	3530	89.5	91.0	91.0	0.77	0.85	0.88	17.2	
		3510	213/5T	22.1	H	7.6	2.4	2.8	0.6362	14	31	163	72.0	1.25	3510	90.2	91.0	91.0	0.76	0.85	0.89	17.0	
		1765	254T	44.0	G	6.5	2.3	2.7	2.62	17	37	251	64.0	1.25	1765	91.0	91.7	92.4	0.68	0.78	0.83	18.0	
		1765	254/6T	44.0	G	6.5	2.3	2.7	2.62	17	37	251	64.0	1.25	1765	91.0	91.7	92.4	0.68	0.78	0.83	18.0	
		1765	256T	44.0	G	6.5	2.3	2.7	2.62	17	37	251	64.0	1.25	1765	91.0	91.7	92.4	0.68	0.78	0.83	18.0	
		1175	284T	66.1	G	6.6	2.3	2.7	7.85	20	44	379	59.0	1.25	1175	91.0	91.7	91.7	0.69	0.80	0.84	17.9	
		1175	284TS	66.1	G	6.6	2.3	2.7	7.85	20	44	379	59.0	1.25	1175	91.0	91.7	91.7	0.69	0.80	0.84	17.9	
		1175	284/6T	66.1	G	6.6	2.3	2.7	7.85	20	44	379	59.0	1.25	1175	91.0	91.7	91.7	0.69	0.80	0.84	17.9	
		1175	284/6TS	66.1	G	6.6	2.3	2.7	7.85	20	44	379	59.0	1.25	1175	91.0	91.7	91.7	0.69	0.80	0.84	17.9	
		880	284/6T	88.3	G	5.5	2.0	2.3	8.18	25	55	417	54.0	1.25	880	90.2	91.0	90.2	0.62	0.73	0.79	19.4	
		880	284/6TS	88.3	G	5.5	2.0	2.3	8.18	25	55	417	54.0	1.25	880	90.2	91.0	90.2	0.62	0.73	0.79	19.4	
20	15	3520	254/6T	29.4	F	6.0	2.0	2.4	1.54	21	46	269	72.0	1.25	3520	91.0	91.7	91.0	0.82	0.87	0.89	23.2	
		3520	256T	29.4	F	6.0	2.0	2.4	1.54	21	46	269	72.0	1.25	3520	91.0	91.7	91.0	0.82	0.87	0.89	23.2	
		1765	254/6T	58.7	G	6.5	2.3	2.7	3.10	15	33	291	64.0	1.25	1765	91.7	92.4	93.0	0.68	0.79	0.84	24.1	
		1765	256T	58.7	G	6.5	2.3	2.7	3.10	15	33	291	64.0	1.25	1765	91.7	92.4	93.0	0.68	0.79	0.84	24.1	
		1765	284T	58.7	G	6.4	2.3	2.6	5.11	27	59	370	64.0	1.25	1765	92.4	93.0	93.0	0.70	0.80	0.84	24.1	
		1765	284TS	58.7	G	6.4	2.3	2.6	5.11	27	59	370	64.0	1.25	1765	92.4	93.0	93.0	0.70	0.80	0.84	24.1	
		1175	284/6T	88.2	G	6.2	2.3	2.6	9.16	16	35	426	59.0	1.25	1175	91.0	91.7	91.7	0.70	0.80	0.85	24.2	
		1175	284/6TS	88.2	G	6.2	2.3	2.6	9.16	16	35	426	59.0	1.25	1175	91.0	91.7	91.7	0.70	0.80	0.85	24.2	
		880	324T	118	G	5.0	1.9	2.2	9.37	27	59	452	56.0	1.25	880	89.5	91.0	91.0	0.54	0.66	0.73	28.3	
		880	324TS	118	G	5.0	1.9	2.2	9.37	27	59	452	56.0	1.25	880	89.5	91.0	91.0	0.54	0.66	0.73	28.3	

Continued on next page

Data subject to change without notice.

W22 TEFC - Cast Iron - Three Phase - NEMA Premium continued

Valid for lines:

THREE-PHASE GENERAL PURPOSE and SEVERE DUTY MOTORS
TEFC – Foot Mount
TEFC – C-Flange – Foot Mount
TEFC – C-Flange – Footless

COOLING TOWER - THREE PHASE
TEFC - Three-Phase - Foot Mount - NEMA Premium
TEAO - Three-Phase - Foot Mount - NEMA Premium

CLOSE-COUPLE PUMP - THREE PHASE - TYPE JM & JP
TEFC – NEMA Premium

CRUSHER DUTY - THREE PHASE
TEFC - Foot Mount - NEMA Premium

IEEE 841 - Three-Phase
TEFC - Foot Mount - NEMA Premium
TEFC - C-Flange - Foot Mount - NEMA Premium
TEFC - C-Flange - Footless - NEMA Premium

Output		Rated Speed (rpm)	Frame	Full Load Torque (ft.lb)	LockedRotor Current		Locked Rotor Torque Tl/Tn	Break-down Torque Tb/Tn	Inertia J (lb-ft2)	Allowable locked rotor time (s)		Weight (lb)	Sound dB(A)	Service Factor	460 V								
																% of full load						
																Efficiency			Power Factor			
HP	kW				Code	II/In				Hot	Cold				Rated speed (rpm)	50	75	100	50	75	100	Full load current In (A)
25	18.5	3535	284TS	36.6	G	6.3	2.0	2.5	2.69	17	37	362	72.0	1.25	3535	91.0	91.7	91.7	0.82	0.87	0.89	28.5
		3535	284/6TS	36.6	G	6.3	2.0	2.5	2.69	17	37	362	72.0	1.25	3535	91.0	91.7	91.7	0.82	0.87	0.89	28.5
		1765	284T	73.4	G	6.2	2.4	2.7	5.11	24	53	388	64.0	1.25	1765	92.4	93.0	93.6	0.70	0.80	0.84	29.5
		1765	284TS	73.4	G	6.2	2.4	2.7	5.11	24	53	388	64.0	1.25	1765	92.4	93.0	93.6	0.70	0.80	0.84	29.5
		1765	286T	73.4	G	6.2	2.4	2.7	5.11	24	53	388	64.0	1.25	1765	92.4	93.0	93.6	0.70	0.80	0.84	29.5
		1765	284/6T	73.4	G	6.2	2.4	2.7	5.11	24	53	388	64.0	1.25	1765	92.4	93.0	93.6	0.70	0.80	0.84	29.5
		1765	284/6TS	73.4	G	6.2	2.4	2.7	5.11	24	53	388	64.0	1.25	1765	92.4	93.0	93.6	0.70	0.80	0.84	29.5
		1180	324T	110	G	6.2	2.1	2.6	11.5	26	57	560	62.0	1.25	1180	91.7	93.0	93.0	0.65	0.77	0.82	30.4
		1180	324TS	110	G	6.2	2.1	2.6	11.5	26	57	560	62.0	1.25	1180	91.7	93.0	93.0	0.65	0.77	0.82	30.4
		1180	326TS	110	G	6.2	2.1	2.6	11.5	26	57	560	62.0	1.25	1180	91.7	93.0	93.0	0.65	0.77	0.82	30.4
		1180	324/6T	110	G	6.2	2.1	2.6	11.5	26	57	560	62.0	1.25	1180	91.7	93.0	93.0	0.65	0.77	0.82	30.4
		880	326TS	147	G	5.2	2.0	2.3	11.9	23	51	509	56.0	1.25	880	89.5	91.0	91.0	0.51	0.64	0.71	35.9
		880	324/6T	147	G	5.2	2.0	2.3	11.9	23	51	509	56.0	1.25	880	89.5	91.0	91.0	0.51	0.64	0.71	35.9
30	22	3535	286TS	44.0	G	6.3	2.0	2.5	3.37	15	33	392	72.0	1.25	3535	91.7	91.7	91.7	0.82	0.87	0.89	33.8
		3535	284/6TS	44.0	G	6.3	2.0	2.5	3.37	15	33	392	72.0	1.25	3535	91.7	91.7	91.7	0.82	0.87	0.89	33.8
		1775	324T	87.6	G	6.4	2.1	2.6	8.18	26	57	463	66.0	1.25	1775	92.4	93.6	93.6	0.70	0.79	0.84	35.1
		1775	324TS	87.6	G	6.4	2.1	2.6	8.18	26	57	463	66.0	1.25	1775	92.4	93.6	93.6	0.70	0.79	0.84	35.1
		1765	286T	88.1	G	6.1	2.4	2.4	5.85	20	44	437	64.0	1.25	1765	93.0	93.0	93.6	0.70	0.80	0.84	35.1
		1765	284/6T	88.1	G	6.1	2.4	2.4	5.85	20	44	437	64.0	1.25	1765	93.0	93.0	93.6	0.70	0.80	0.84	35.1
		1765	284/6TS	88.1	G	6.1	2.4	2.4	5.85	20	44	437	64.0	1.25	1765	93.0	93.0	93.6	0.70	0.80	0.84	35.1
		1180	326TS	132	G	6.2	2.3	2.6	13.2	21	46	553	62.0	1.25	1180	91.7	93.0	93.0	0.65	0.77	0.83	35.8
		1180	324/6T	132	G	6.2	2.3	2.6	13.2	21	46	553	62.0	1.25	1180	91.7	93.0	93.0	0.65	0.77	0.83	35.8
		1180	364/5T	132	G	6.4	1.9	2.4	13.2	27	59	781	66.0	1.25	1180	93.0	93.6	93.0	0.72	0.81	0.85	34.9
		1180	364/5TS	132	G	6.4	1.9	2.4	13.2	27	59	781	66.0	1.25	1180	93.0	93.6	93.0	0.72	0.81	0.85	34.9
		880	364/5T	177	G	6.2	1.7	2.4	23.5	20	44	803	60.0	1.25	880	92.4	92.4	92.4	0.63	0.74	0.80	37.0
		880	364/5TS	177	G	6.2	1.7	2.4	23.5	20	44	803	60.0	1.25	880	92.4	92.4	92.4	0.63	0.74	0.80	37.0

Continued on next page

W22 TEFC - Cast Iron - Three Phase - NEMA Premium continued

Valid for lines:

THREE-PHASE GENERAL PURPOSE and SEVERE DUTY MOTORS
TEFC – Foot Mount
TEFC – C-Flange – Foot Mount
TEFC – C-Flange – Footless

COOLING TOWER - THREE PHASE
TEFC - Three-Phase - Foot Mount - NEMA Premium
TEAO - Three-Phase - Foot Mount - NEMA Premium

CLOSE-COUPLE PUMP - THREE PHASE - TYPE JM & JP
TEFC – NEMA Premium

CRUSHER DUTY - THREE PHASE
TEFC - Foot Mount - NEMA Premium

IEEE 841 - Three-Phase
TEFC - Foot Mount - NEMA Premium
TEFC - C-Flange - Foot Mount - NEMA Premium
TEFC - C-Flange - Footless - NEMA Premium

Output		Rated Speed (rpm)	Frame	Full Load Torque (ft.lb)	Locked Rotor Current		Locked Rotor Torque Tl/Tn	Break-down Torque Tb/Tn	Inertia J (lb-ft2)	Allowable locked rotor time (s)		Weight (lb)	Sound dB(A)	Service Factor	460 V							
															Rated speed (rpm)	% of full load						Full load current In (A)
																Efficiency			Power Factor			
HP	kW				Code	II/In				Hot	Cold					50	75	100	50	75	100	
40	30	3555	324TS	58.3	G	6.4	2.3	2.4	4.90	22	48	547	78.0	1.25	3555	91.7	92.4	92.4	0.82	0.87	0.89	45.8
		3555	324/6TS	58.3	G	6.4	2.3	2.4	4.90	22	48	547	78.0	1.00	3555	91.7	92.4	92.4	0.82	0.87	0.89	45.8
		1775	324T	117	G	6.2	2.2	2.6	9.16	20	44	492	66.0	1.25	1775	93.0	94.1	94.1	0.67	0.78	0.83	48.2
		1775	324TS	117	G	6.2	2.2	2.6	9.16	20	44	492	66.0	1.25	1775	93.0	94.1	94.1	0.67	0.78	0.83	48.2
		1775	326TS	117	G	6.2	2.2	2.6	9.16	20	44	492	66.0	1.25	1775	93.0	94.1	94.1	0.67	0.78	0.83	48.2
		1775	324/6T	117	G	6.2	2.2	2.6	9.16	20	44	492	66.0	1.25	1775	93.0	94.1	94.1	0.67	0.78	0.83	48.2
		1775	326T	117	G	6.2	2.2	2.6	9.16	20	44	492	66.0	1.25	1775	93.0	94.1	94.1	0.67	0.78	0.83	48.2
		1180	364/5T	176	G	6.4	2.0	2.4	29.0	21	46	833	66.0	1.25	1180	93.6	93.6	94.1	0.73	0.82	0.86	46.5
		1180	364/5TS	176	G	6.4	2.0	2.4	29.0	21	46	833	66.0	1.25	1180	93.6	93.6	94.1	0.73	0.82	0.86	46.5
		880	364/5T	235	G	6.0	1.7	2.3	29.0	18	40	875	60.0	1.25	880	92.4	93.0	92.4	0.66	0.76	0.81	50.0
		880	364/5TS	235	G	6.0	1.7	2.3	29.0	18	40	875	60.0	1.25	880	92.4	93.0	92.4	0.66	0.76	0.81	50.0
50	37	3550	326TS	73.0	F	6.2	2.2	2.3	5.75	23	51	584	78.0	1.25	3550	93.0	93.0	93.0	0.83	0.87	0.89	56.1
		3550	324/6TS	73.0	F	6.2	2.2	2.3	5.75	23	51	584	78.0	1.25	3550	93.0	93.0	93.0	0.83	0.87	0.89	56.1
		1775	326T	146	G	6.2	2.3	2.7	9.16	15	33	536	66.0	1.25	1775	93.0	94.1	94.5	0.66	0.77	0.83	59.2
		1775	326TS	146	G	6.2	2.3	2.7	9.16	15	33	536	66.0	1.25	1775	93.0	94.1	94.5	0.66	0.77	0.83	59.2
		1775	324/6T	146	G	6.2	2.3	2.7	9.16	15	33	536	66.0	1.25	1775	93.0	94.1	94.5	0.66	0.77	0.83	59.2
		1180	364/5T	220	G	6.4	2.0	2.4	32.4	18	40	869	66.0	1.25	1180	93.6	94.1	94.1	0.74	0.83	0.86	57.4
		1180	364/5TS	220	G	6.4	2.0	2.4	32.4	18	40	869	66.0	1.25	1180	93.6	94.1	94.1	0.74	0.83	0.86	57.4
		1180	404/5T	220	G	6.3	2.0	2.4	32.4	20	44	975	68.0	1.25	1180	93.6	94.1	94.1	0.73	0.82	0.85	58.1
		1180	404/5TS	220	G	6.3	2.0	2.4	32.4	20	44	975	68.0	1.25	1180	93.6	94.1	94.1	0.73	0.82	0.85	58.1
		880	404/5T	294	H	6.8	1.7	2.6	34.6	15	33	1012	60.0	1.25	880	93.0	93.0	93.0	0.68	0.78	0.83	60.0
		880	404/5TS	294	H	6.8	1.7	2.6	34.6	15	33	1012	60.0	1.25	880	93.0	93.0	93.0	0.68	0.78	0.83	60.0
60	45	3560	364/5TS	87.3	G	6.6	2.0	2.6	10.6	14	31	825	79.0	1.25	3560	91.7	93.0	93.6	0.81	0.88	0.90	67.0
		3555	404/5TS	87.4	G	6.5	2.0	2.5	10.6	22	48	911	79.0	1.25	3555	91.7	93.0	93.6	0.82	0.88	0.90	67.0
		1775	364/5T	175	G	6.6	2.4	2.6	22.4	15	33	869	67.0	1.25	1775	94.1	94.5	95.0	0.75	0.83	0.87	68.3
		1775	364/5TS	175	G	6.6	2.4	2.6	22.4	15	33	869	67.0	1.25	1775	94.1	94.5	95.0	0.75	0.83	0.87	68.3
		1180	404/5T	263	G	6.4	2.0	2.3	36.9	20	44	1036	68.0	1.25	1180	94.1	94.5	94.5	0.74	0.82	0.86	69.5
		1180	404/5TS	263	G	6.4	2.0	2.3	36.9	20	44	1036	68.0	1.25	1180	94.1	94.5	94.5	0.74	0.82	0.86	69.5
		880	404/5T	353	H	6.5	1.8	2.7	40.2	13	29	1111	60.0	1.25	880	93.0	93.0	93.0	0.68	0.78	0.83	73.0
		880	404/5TS	353	H	6.5	1.8	2.7	40.2	13	29	1111	60.0	1.25	880	93.0	93.0	93.0	0.68	0.78	0.83	73.0

Continued on next page

Data subject to change without notice.

W22 TEFC - Cast Iron - Three Phase - NEMA Premium continued

Valid for lines:

THREE-PHASE GENERAL PURPOSE and SEVERE DUTY MOTORS
TEFC – Foot Mount
TEFC – C-Flange – Foot Mount
TEFC – C-Flange – Footless

COOLING TOWER - THREE PHASE
TEFC - Three-Phase - Foot Mount - NEMA Premium
TEAO - Three-Phase - Foot Mount - NEMA Premium

CLOSE-COUPLE PUMP - THREE PHASE - TYPE JM & JP
TEFC – NEMA Premium

CRUSHER DUTY - THREE PHASE
TEFC - Foot Mount - NEMA Premium

IEEE 841 - Three-Phase
TEFC - Foot Mount - NEMA Premium
TEFC - C-Flange - Foot Mount - NEMA Premium
TEFC - C-Flange - Footless - NEMA Premium

Output		Rated Speed (rpm)	Frame	Full Load Torque (ft.lb)	Locked Rotor Current		Locked Rotor Torque Ti/Tn	Break-down Torque Tb/Tn	Inertia J (lb-ft2)	Allowable locked rotor time (s)		Weight (lb)	Sound dB(A)	Service Factor	460 V							
															Rated speed (rpm)	% of full load					Full load current In (A)
																Efficiency			Power Factor		
HP	kW				Code	II/In				Hot	Cold					50	75	100	50	75	100	
		3555	364/5TS	109	G	6.6	2.0	2.6	11.9	10	22	847	79.0	1.25	3555	92.4	93.6	93.6	0.83	0.88	0.90	81.9
		1775	364/5T	219	G	6.4	2.4	2.6	23.3	14	31	919	67.0	1.25	1775	94.5	95.0	95.4	0.73	0.82	0.86	84.1
		1775	364/5TS	219	G	6.4	2.4	2.6	23.3	14	31	919	67.0	1.25	1775	94.5	95.0	95.4	0.73	0.82	0.86	84.1
75	55	1180	404/5T	329	G	6.4	2.0	2.3	40.2	17	37	1089	68.0	1.25	1180	94.1	94.5	94.5	0.74	0.83	0.86	84.9
		1180	404/5TS	329	G	6.4	2.0	2.3	40.2	17	37	1089	68.0	1.25	1180	94.1	94.5	94.5	0.74	0.83	0.86	84.9
		890	444/5T	437	G	6.0	1.8	2.1	73.6	18	40	1444	63.0	1.25	890	93.0	93.6	93.6	0.64	0.74	0.79	93.0
		890	444/5TS	437	G	6.0	1.8	2.1	73.6	18	40	1444	63.0	1.25	890	93.0	93.6	93.6	0.64	0.74	0.79	93.0
		3555	404/5TS	146	G	6.5	2.0	2.4	13.2	14	31	1045	79.0	1.25	3555	93.0	94.1	94.1	0.85	0.90	0.91	110
		1775	404/5T	292	H	7.3	2.4	2.6	29.9	13	29	1140	68.0	1.25	1775	95.0	95.0	95.4	0.77	0.84	0.88	111
		1775	404/5TS	292	H	7.3	2.4	2.6	29.9	13	29	1140	68.0	1.25	1775	95.0	95.0	95.4	0.77	0.84	0.88	111
100	75	1185	444/5T	437	G	6.2	2.2	2.6	87.3	20	44	1577	69.0	1.25	1185	94.5	95.0	95.0	0.68	0.78	0.82	121
		1185	444/5TS	437	G	6.2	2.2	2.6	87.3	20	44	1577	69.0	1.25	1185	94.5	95.0	95.0	0.68	0.78	0.82	121
		890	444/5T	582	G	6.0	1.9	2.2	87.3	15	33	1599	63.0	1.25	890	93.6	94.1	94.1	0.63	0.74	0.79	127
		890	444/5TS	582	G	6.0	1.9	2.2	87.3	15	33	1599	63.0	1.25	890	93.6	94.1	94.1	0.63	0.74	0.79	127
		3570	444/5TS	181	G	6.6	2.0	2.5	33.5	29	64	1599	81.0	1.15	3570	93.6	94.5	95.0	0.82	0.87	0.89	134
		1780	444/5T	364	G	6.5	2.0	2.5	57.2	27	59	1590	73.0	1.15	1780	95.0	95.4	95.4	0.74	0.82	0.85	139
		1780	444/5TS	364	G	6.5	2.0	2.5	57.2	27	59	1590	73.0	1.15	1780	95.0	95.4	95.4	0.74	0.82	0.85	139
		1780	445/7T	364	G	6.5	2.0	2.5	57.2	27	59	1590	73.0	1.15	1780	95.0	95.4	95.4	0.74	0.82	0.85	139
		1780	445/7TS	364	G	6.5	2.0	2.5	57.2	27	59	1590	73.0	1.15	1780	95.0	95.4	95.4	0.74	0.82	0.85	139
125	90	1185	444/5T	547	G	6.4	2.1	2.4	104	19	42	1751	69.0	1.15	1185	95.0	95.4	95.0	0.70	0.79	0.83	143
		1185	444/5TS	547	G	6.4	2.1	2.4	104	19	42	1751	69.0	1.15	1185	95.0	95.4	95.0	0.70	0.79	0.83	143
		890	504/5T	728	F	5.8	1.8	2.0	104	23	51	2110	66.0	1.15	890	94.5	94.5	94.5	0.66	0.76	0.80	149
		890	504/5TS	728	F	5.8	1.8	2.0	104	23	51	2110	66.0	1.15	890	94.5	94.5	94.5	0.66	0.76	0.80	149
		890	445/7T	728	G	6.0	1.8	2.1	104	17	37	1887	63.0	1.15	890	94.5	94.5	94.5	0.64	0.74	0.79	151
		890	445/7TS	728	G	6.0	1.8	2.1	104	17	37	1887	63.0	1.15	890	94.5	94.5	94.5	0.64	0.74	0.79	151

Continued on next page

W22 TEFC - Cast Iron - Three Phase - NEMA Premium continued

Valid for lines:

THREE-PHASE GENERAL PURPOSE and SEVERE DUTY MOTORS
TEFC – Foot Mount
TEFC – C-Flange – Foot Mount
TEFC – C-Flange – Footless

COOLING TOWER - THREE PHASE
TEFC - Three-Phase - Foot Mount - NEMA Premium
TEAO - Three-Phase - Foot Mount - NEMA Premium

CLOSE-COUPLE PUMP - THREE PHASE - TYPE JM & JP
TEFC – NEMA Premium

CRUSHER DUTY - THREE PHASE
TEFC - Foot Mount - NEMA Premium

IEEE 841 - Three-Phase
TEFC - Foot Mount - NEMA Premium
TEFC - C-Flange - Foot Mount - NEMA Premium
TEFC - C-Flange - Footless - NEMA Premium

Output		Rated Speed (rpm)	Frame	Full Load Torque (ft.lb)	Locked Rotor Current		Locked Rotor Torque Tl/Tn	Break-down Torque Tb/Tn	Inertia J (lb-ft2)	Allowable locked rotor time (s)		Weight (lb)	Sound dB(A)	Service Factor	460 V							
															Rated speed (rpm)	% of full load						Full load current In (A)
																Efficiency			Power Factor			
HP	kW				Code	Il/In				Hot	Cold					50	75	100	50	75	100	
150	110	3570	444/5TS	218	F	6.5	1.8	2.4	39.1	22	48	1709	81.0	1.15	3570	94.1	95.0	95.0	0.83	0.88	0.90	161
		1780	444/5T	437	G	6.6	2.0	2.5	66.7	27	59	1676	73.0	1.15	1780	95.4	95.8	95.8	0.74	0.82	0.85	170
		1780	444/5TS	437	G	6.6	2.0	2.5	66.7	27	59	1676	73.0	1.15	1780	95.4	95.8	95.8	0.74	0.82	0.85	170
		1780	445/7T	437	G	6.6	2.0	2.5	66.7	27	59	1676	73.0	1.15	1780	95.4	95.8	95.8	0.74	0.82	0.85	170
		1780	445/7TS	437	G	6.6	2.0	2.5	66.7	27	59	1676	73.0	1.15	1780	95.4	95.8	95.8	0.74	0.82	0.85	170
		1190	504/5T	653	G	6.2	2.3	2.5	134	29	64	2249	70.0	1.15	1190	94.5	95.4	95.8	0.67	0.78	0.82	176
		1190	504/5TS	653	G	6.2	2.3	2.5	134	29	64	2249	70.0	1.15	1190	94.5	95.4	95.8	0.67	0.78	0.82	176
		1190	445/7T	653	G	6.2	2.4	2.9	134	20	44	2042	69.0	1.15	1190	95.0	95.4	95.8	0.67	0.78	0.82	176
		1190	445/7TS	653	G	6.2	2.4	2.9	134	20	44	2042	69.0	1.15	1190	95.0	95.4	95.8	0.67	0.78	0.82	176
		890	504/5T	873	F	5.8	1.8	2.0	125	21	46	2293	66.0	1.15	890	94.5	94.5	94.5	0.68	0.77	0.81	180
		890	504/5TS	873	F	5.8	1.8	2.0	125	21	46	2293	66.0	1.15	890	94.5	94.5	94.5	0.68	0.77	0.81	180
		890	445/7T	873	G	6.0	1.9	2.1	125	15	33	2042	63.0	1.15	890	94.5	94.5	94.5	0.64	0.74	0.79	185
		890	445/7TS	873	G	6.0	1.9	2.1	125	15	33	2042	63.0	1.15	890	94.5	94.5	94.5	0.64	0.74	0.79	185
200	150	3575	504/5TS	290	G	6.8	2.0	2.7	44.7	17	37	2168	81.0	1.15	3575	94.1	95.0	95.4	0.81	0.87	0.89	222
		3575	447/9TS	290	H	7.2	2.0	2.7	44.7	17	37	2168	---	1.15	3575	94.1	95.0	95.4	0.81	0.87	0.89	222
		3570	445/7TS	290	G	6.8	2.4	2.4	44.7	14	31	1914	81.0	1.15	3570	95.0	95.4	95.4	0.86	0.89	0.90	219
		1785	504/5T	580	G	6.6	2.2	2.2	76.2	22	48	2273	75.0	1.15	1785	95.4	96.2	96.2	0.75	0.83	0.86	228
		1785	504/5TS	580	G	6.6	2.2	2.2	76.2	22	48	2273	75.0	1.15	1785	95.4	96.2	96.2	0.75	0.83	0.86	228
		1780	445/7T	582	G	6.4	2.4	2.5	76.2	16	35	1899	73.0	1.15	1780	95.4	96.2	96.2	0.73	0.82	0.85	230
		1780	445/7TS	582	G	6.4	2.4	2.5	76.2	16	35	1899	73.0	1.15	1780	95.4	96.2	96.2	0.73	0.82	0.85	230
		1780	444/5T	582	G	6.4	2.4	2.5	76.2	16	35	1899	73.0	1.15	1780	95.4	96.2	96.2	0.73	0.82	0.85	230
		1780	444/5TS	582	G	6.4	2.4	2.5	76.2	16	35	1899	73.0	1.15	1780	95.4	96.2	96.2	0.73	0.82	0.85	230
		1780	447/9T	582	G	6.8	2.4	2.5	76.2	16	35	1899	---	1.15	1780	95.4	96.2	96.2	0.73	0.82	0.85	230
		1780	447/9TS	582	G	6.8	2.4	2.5	76.2	16	35	1899	---	1.15	1780	95.4	96.2	96.2	0.73	0.82	0.85	230
		1190	504/5T	871	G	6.2	2.2	2.3	145	21	46	2459	70.0	1.15	1190	95.0	95.4	95.8	0.70	0.80	0.83	237
		1190	504/5TS	871	G	6.2	2.2	2.3	145	21	46	2459	70.0	1.15	1190	95.0	95.4	95.8	0.70	0.80	0.83	237
		1190	447/9T	871	G	6.6	2.3	2.4	145	15	33	2247	---	1.15	1190	95.0	95.4	95.8	0.68	0.79	0.83	237
		1190	447/9TS	871	G	6.6	2.3	2.4	145	15	33	2247	---	1.15	1190	95.0	95.4	95.8	0.68	0.79	0.83	237
		1185	445/7T	874	G	6.3	2.3	2.4	145	15	33	2247	69.0	1.15	1185	95.0	95.4	95.8	0.68	0.79	0.83	237
		1185	445/7TS	874	G	6.3	2.3	2.4	145	15	33	2247	69.0	1.15	1185	95.0	95.4	95.8	0.68	0.79	0.83	237
		895	586/7T	1158	G	6.3	1.4	2.1	350	40	88	3334	75.0	1.15	895	95.0	95.4	95.4	0.65	0.75	0.80	247
		895	586/7TS	1158	G	6.3	1.4	2.1	350	40	88	3334	75.0	1.15	895	95.0	95.4	95.4	0.65	0.75	0.80	247
		890	447/9T	1164	G	6.2	2.0	2.2	161	13	29	2509	---	1.15	890	94.5	95.0	95.0	0.62	0.73	0.78	254
		890	447/9TS	1164	G	6.2	2.0	2.2	161	13	29	2509	---	1.15	890	94.5	95.0	95.0	0.62	0.73	0.78	254

Continued on next page

Data subject to change without notice.

W22 TEFC - Cast Iron - Three Phase - NEMA Premium continued

Valid for lines:

THREE-PHASE GENERAL PURPOSE and SEVERE DUTY MOTORS
TEFC – Foot Mount
TEFC – C-Flange – Foot Mount
TEFC – C-Flange – Footless

COOLING TOWER - THREE PHASE
TEFC - Three-Phase - Foot Mount - NEMA Premium
TEAO - Three-Phase - Foot Mount - NEMA Premium

CLOSE-COUPLE PUMP - THREE PHASE - TYPE JM & JP
TEFC – NEMA Premium

CRUSHER DUTY - THREE PHASE
TEFC - Foot Mount - NEMA Premium

IEEE 841 - Three-Phase
TEFC - Foot Mount - NEMA Premium
TEFC - C-Flange - Foot Mount - NEMA Premium
TEFC - C-Flange - Footless - NEMA Premium

Output		Rated Speed (rpm)	Frame	Full Load Torque (ft.lb)	LockedRotor Current		Locked Rotor Torque Tl/Tn	Break-down Torque Tb/Tn	Inertia J (lb-ft2)	Allowable locked rotor time (s)		Weight (lb)	Sound dB(A)	Service Factor	460 V							
															Rated speed (rpm)	% of full load						Full load current In (A)
																Efficiency			Power Factor			
HP	kW				Code	Il/In				Hot	Cold					50	75	100	50	75	100	
250	185	3575	504/5TS	362	G	7.0	2.0	2.4	50.3	23	51	2388	81.0	1.15	3575	95.0	95.8	95.8	0.85	0.89	0.90	269
		3570	445/7TS	363	F	6.5	2.3	2.2	50.3	18	40	2159	81.0	1.15	3570	95.4	95.8	95.8	0.87	0.90	0.91	266
		3570	447/9TS	363	F	6.5	2.3	2.2	50.3	18	40	2159	---	1.15	3570	95.4	95.8	95.8	0.87	0.90	0.91	266
		1785	504/5TS	726	G	6.6	2.3	2.2	89.6	20	44	2450	75.0	1.15	1785	95.8	96.2	96.2	0.78	0.85	0.87	277
		1785	504/5T	726	G	6.6	2.3	2.2	89.6	20	44	2450	75.0	1.15	1785	95.8	96.2	96.2	0.78	0.85	0.87	277
		1780	445/7T	728	G	6.6	2.3	2.4	89.6	15	33	2079	73.0	1.15	1780	95.8	96.2	96.2	0.75	0.83	0.86	281
		1780	445/7TS	728	G	6.6	2.3	2.4	89.6	15	33	2079	73.0	1.15	1780	95.8	96.2	96.2	0.75	0.83	0.86	281
		1780	447/9T	728	G	6.6	2.3	2.4	89.6	15	33	2079	---	1.15	1780	95.8	96.2	96.2	0.75	0.83	0.86	281
		1780	447/9TS	728	G	6.6	2.3	2.4	89.6	15	33	2079	---	1.15	1780	95.8	96.2	96.2	0.75	0.83	0.86	281
		1190	586/7T	1088	G	6.2	2.0	2.1	226	30	66	3206	77.0	1.15	1190	95.0	95.4	95.8	0.68	0.77	0.81	299
		1190	586/7TS	1088	G	6.2	2.0	2.1	226	30	66	3206	77.0	1.15	1190	95.0	95.4	95.8	0.68	0.77	0.81	299
		1185	447/9T	1093	F	6.0	2.4	2.4	145	12	26	2538	---	1.15	1185	95.0	95.4	95.8	0.68	0.79	0.83	292
		1185	447/9TS	1093	F	6.0	2.4	2.4	145	12	26	2538	---	1.15	1185	95.0	95.4	95.8	0.68	0.79	0.83	292
		895	586/7T	1447	G	6.2	1.4	2.1	395	40	88	3649	75.0	1.15	895	95.4	95.8	95.8	0.66	0.76	0.81	299
		895	586/7TS	1447	G	6.2	1.4	2.1	395	40	88	3649	75.0	1.15	895	95.4	95.8	95.8	0.66	0.76	0.81	299
		890	L447/9T	1455	G	6.0	2.0	2.3	255	24	53	3550	64.0	1.15	890	95.4	95.4	95.4	0.65	0.75	0.79	308
		890	L447/9TS	1455	G	6.0	2.0	2.3	255	24	53	3550	64.0	1.15	890	95.4	95.4	95.4	0.65	0.75	0.79	308
300	220	3580	586/7TS	434	F	6.5	1.6	2.2	123	35	77	3382	84.0	1.15	3580	95.0	95.8	95.8	0.87	0.90	0.91	317
		3570	447/9TS	435	G	7.0	2.5	2.4	58.1	14	31	2545	---	1.15	3570	95.4	95.8	95.8	0.86	0.89	0.90	320
		1790	586/7TS	868	G	6.8	2.3	2.3	161	19	42	3080	78.0	1.15	1790	95.4	96.2	96.2	0.77	0.84	0.86	334
		1790	586/7T	868	G	6.8	2.3	2.3	161	19	42	3080	78.0	1.15	1790	95.4	96.2	96.2	0.77	0.84	0.86	334
		1780	447/9T	873	G	6.5	2.3	2.3	89.6	16	35	2381	---	1.15	1780	95.8	96.2	96.2	0.77	0.84	0.87	330
		1780	447/9TS	873	G	6.5	2.3	2.3	89.6	16	35	2381	---	1.15	1780	95.8	96.2	96.2	0.77	0.84	0.87	330
		1190	447/9T	1306	J	7.7	2.7	3.0	145	10	22	2613	---	1.15	1190	95.4	95.8	95.8	0.63	0.75	0.81	356
		1190	447/9TS	1306	J	7.7	2.7	3.0	145	10	22	2613	---	1.15	1190	95.4	95.8	95.8	0.63	0.75	0.81	356
		1190	586/7T	1306	G	6.0	2.0	2.0	277	30	66	3495	77.0	1.15	1190	95.4	95.8	95.8	0.69	0.78	0.81	356
		1190	586/7TS	1306	G	6.0	2.0	2.0	277	30	66	3495	77.0	1.15	1190	95.4	95.8	95.8	0.69	0.78	0.81	356
		895	586/7T	1737	H	6.7	1.5	2.2	451	40	88	4035	75.0	1.15	895	95.4	95.8	95.8	0.66	0.77	0.81	356
		895	586/7TS	1737	H	6.7	1.5	2.2	451	40	88	4035	75.0	1.15	895	95.4	95.8	95.8	0.66	0.77	0.81	356
		890	L447/9T*	1746	G	6.3	2.2	2.4	285	16	35	3704	64.0	1.15	890	95.4	95.4	95.4	0.62	0.73	0.78	371
		890	L447/9TS*	1746	G	6.3	2.2	2.4	285	16	35	3704	64.0	1.15	890	95.4	95.4	95.4	0.62	0.73	0.78	371

Continued on next page

W22 TEFC - Cast Iron - Three Phase - NEMA Premium continued

THREE-PHASE GENERAL PURPOSE and SEVERE DUTY MOTORS
TEFC – Foot Mount
TEFC – C-Flange – Foot Mount
TEFC – C-Flange – Footless

COOLING TOWER - THREE PHASE
TEFC - Three-Phase - Foot Mount - NEMA Premium
TEAO - Three-Phase - Foot Mount - NEMA Premium

CLOSE-COUPLE PUMP - THREE PHASE - TYPE JM & JP
TEFC – NEMA Premium

CRUSHER DUTY - THREE PHASE
TEFC - Foot Mount - NEMA Premium

IEEE 841 - Three-Phase
TEFC - Foot Mount - NEMA Premium
TEFC - C-Flange - Foot Mount - NEMA Premium
TEFC - C-Flange - Footless - NEMA Premium

Output		Rated Speed (rpm)	Frame	Full Load Torque (ft.lb)	LockedRotor Current		Locked Rotor Torque Tl/Tn	Break-down Torque Tb/Tn	Inertia J (lb-ft2)	Allowable locked rotor time (s)		Weight (lb)	Sound dB(A)	Service Factor	460 V							
															Rated speed (rpm)	% of full load						Full load current In (A)
																Efficiency			Power Factor			
HP	kW				Code	Il/In				Hot	Cold					50	75	100	50	75	100	
350	260	3580	586/7TS	507	G	6.6	1.6	2.3	136	28	62	3621	84.0	1.15	3580	95.4	96.2	96.2	0.86	0.90	0.91	373
		3575	447/9TS	507	G	7.0	2.4	2.5	68.1	10	22	2701	---	1.15	3575	95.4	96.2	96.2	0.85	0.89	0.90	377
		1790	586/7TS	1013	G	6.4	2.0	2.0	179	23	51	2675	78.0	1.15	1790	95.8	96.2	96.2	0.78	0.85	0.86	394
		1790	586/7T	1013	G	6.4	2.0	2.0	179	23	51	2675	78.0	1.15	1790	95.8	96.2	96.2	0.78	0.85	0.86	394
		1790	L447/9T	1013	G	6.9	2.6	2.5	0.0000	45	99	2867	77.0	1.15	1790	95.8	96.2	96.2	0.76	0.83	0.86	394
		1790	L447/9TS	1013	G	6.9	2.6	2.5	0.0000	45	99	2867	77.0	1.15	1790	95.8	96.2	96.2	0.76	0.83	0.86	394
		1780	447/9T	1019	G	6.4	2.5	2.4	118	14	31	2675	75.0	1.15	1780	95.8	96.2	96.2	0.77	0.84	0.86	394
		1780	447/9TS	1019	G	6.4	2.5	2.4	118	14	31	2675	75.0	1.15	1780	95.8	96.2	96.2	0.77	0.84	0.86	394
		1190	586/7T	1524	G	6.3	2.1	2.1	328	29	64	3784	77.0	1.15	1190	95.4	95.8	95.8	0.67	0.77	0.81	421
		1190	586/7TS	1524	G	6.3	2.1	2.1	328	29	64	3784	77.0	1.15	1190	95.4	95.8	95.8	0.67	0.77	0.81	421
		1190	L447/9T	1524	G	6.4	2.5	2.7	257	23	51	3574	71.0	1.15	1190	95.4	95.8	95.8	0.66	0.77	0.82	415
		1190	L447/9TS	1524	G	6.4	2.5	2.7	257	23	51	3574	71.0	1.15	1190	95.4	95.8	95.8	0.66	0.77	0.82	415
		895	586/7T	2026	G	6.4	1.6	2.3	484	34	75	4309	75.0	1.00	895	95.4	95.8	95.8	0.64	0.75	0.80	426
		895	586/7TS	2026	G	6.4	1.6	2.3	484	34	75	4309	75.0	1.00	895	95.4	95.8	95.8	0.64	0.75	0.80	426
400	300	3580	586/7TS	579	F	6.5	1.8	2.2	122	48	106	3749	84.0	1.15	3580	95.8	96.2	96.2	0.88	0.90	0.91	430
		3575	L447/9TS	580	G	6.7	2.2	2.5	91.9	25	55	3158	88.0	1.15	3575	95.4	95.8	95.8	0.85	0.90	0.91	432
		1790	586/7T	1158	G	6.4	2.0	2.2	179	19	42	3455	78.0	1.15	1790	95.8	96.2	96.2	0.78	0.85	0.86	455
		1790	586/7TS	1158	G	6.4	2.0	2.2	179	19	42	3455	78.0	1.15	1790	95.8	96.2	96.2	0.78	0.85	0.86	455
		1790	L447/9T	1158	H	7.0	2.5	2.6	136	21	46	3285	79.0	1.15	1790	95.4	95.8	96.2	0.74	0.82	0.86	455
		1790	L447/9TS	1158	H	7.0	2.5	2.6	136	21	46	3285	79.0	1.15	1790	95.4	95.8	96.2	0.74	0.82	0.86	455
		1190	586/7T	1741	G	6.0	2.3	2.1	368	29	64	4115	77.0	1.15	1190	95.4	95.8	96.2	0.67	0.77	0.81	483
		1190	586/7TS	1741	G	6.0	2.3	2.1	368	29	64	4115	77.0	1.15	1190	95.4	95.8	96.2	0.67	0.77	0.81	483
		1190	L447/9T*	1741	H	6.9	2.4	2.5	278	13	29	3682	71.0	1.15	1190	95.4	95.8	95.8	0.68	0.78	0.82	477
		1190	L447/9TS*	1741	H	6.9	2.4	2.5	278	13	29	3682	71.0	1.15	1190	95.4	95.8	95.8	0.68	0.78	0.82	477
		895	588/9T	2315	H	6.7	1.5	2.4	537	25	55	4851	75.0	1.00	895	95.0	95.6	95.7	0.62	0.73	0.79	498
		895	588/9TS	2315	H	6.7	1.5	2.4	537	25	55	4851	75.0	1.00	895	95.0	95.6	95.7	0.62	0.73	0.79	498

Continued on next page

Data subject to change without notice.

THREE-PHASE GENERAL PURPOSE and SEVERE DUTY MOTORS
TEFC – Foot Mount
TEFC – C-Flange – Foot Mount
TEFC – C-Flange – Footless

COOLING TOWER - THREE PHASE
TEFC - Three-Phase - Foot Mount - NEMA Premium
TEAO - Three-Phase - Foot Mount - NEMA Premium

CLOSE-COUPLE PUMP - THREE PHASE - TYPE JM & JP
TEFC – NEMA Premium

CRUSHER DUTY - THREE PHASE
TEFC - Foot Mount - NEMA Premium

IEEE 841 - Three-Phase
TEFC - Foot Mount - NEMA Premium
TEFC - C-Flange - Foot Mount - NEMA Premium
TEFC - C-Flange - Footless - NEMA Premium

Output		Rated Speed (rpm)	Frame	Full Load Torque (ft.lb)	Locked Rotor Current		Locked Rotor Torque Tl/Tn	Break-down Torque Tb/Tn	Inertia J (lb-ft2)	Allowable locked rotor time (s)		Weight (lb)	Sound dB(A)	Service Factor	460 V							
															Rated speed (rpm)	% of full load						Full load current In (A)
																Efficiency			Power Factor			
HP	kW				Code	Il/In				Hot	Cold					50	75	100	50	75	100	
450	330	3580	586/7TS	651	F	6.6	2.0	2.3	132	34	75	3918	84.0	1.15	3580	95.8	96.2	96.2	0.88	0.90	0.91	473
		3575	L447/9TS	652	G	7.2	2.4	2.6	100	26	57	3268	88.0	1.00	3575	95.4	95.8	95.8	0.84	0.89	0.91	475
		1790	586/7T	1302	G	6.8	2.4	2.1	213	16	35	3640	78.0	1.15	1790	95.8	96.2	96.2	0.78	0.85	0.86	501
		1790	586/7TS	1302	G	6.8	2.4	2.1	213	16	35	3640	78.0	1.15	1790	95.8	96.2	96.2	0.78	0.85	0.86	501
		1790	L447/9T	1302	G	6.9	2.6	2.5	152	22	48	3396	79.0	1.15	1790	95.4	96.2	96.2	0.74	0.83	0.86	501
		1790	L447/9TS	1302	G	6.9	2.6	2.5	152	22	48	3396	79.0	1.15	1790	95.4	96.2	96.2	0.74	0.83	0.86	501
		1190	586/7T	1959	G	6.2	2.1	2.1	368	26	57	4384	77.0	1.00	1190	95.8	96.2	96.2	0.67	0.77	0.81	532
		1190	586/7TS	1959	G	6.2	2.1	2.1	368	26	57	4384	77.0	1.00	1190	95.8	96.2	96.2	0.67	0.77	0.81	532
		895	588/9T	2605	H	7.0	1.6	2.6	617	27	59	5281	75.0	1.00	895	95.2	95.7	95.8	0.60	0.72	0.78	554
		895	588/9TS	2605	H	7.0	1.6	2.6	617	27	59	5281	75.0	1.00	895	95.2	95.7	95.8	0.60	0.72	0.78	554
500	370	3580	586/7TS	724	G	6.8	2.2	2.4	143	39	86	4086	84.0	1.15	3580	95.8	96.2	96.2	0.88	0.90	0.91	530
		1790	586/7T	1447	G	6.5	2.4	2.0	256	16	35	3912	78.0	1.00	1790	95.8	96.2	96.2	0.80	0.85	0.87	555
		1790	586/7TS	1447	G	6.5	2.4	2.0	256	16	35	3912	78.0	1.00	1790	95.8	96.2	96.2	0.80	0.85	0.87	555
		1785	L447/9T*	1451	H	7.2	2.5	2.6	160	22	48	3462	79	1	1785	95.4	96.2	96.2	0.73	0.82	0.86	561
		1785	L447/9TS*	1451	H	7.2	2.5	2.6	160	22	48	3462	79	1	1785	95.4	96.2	96.2	0.73	0.82	0.86	561
		1190	586/7T	2177	G	6.2	2.2	2.1	368	25	55	4403	77.0	1.00	1190	95.8	96.2	96.2	0.66	0.76	0.80	603
		1190	586/7TS	2177	G	6.2	2.2	2.1	368	25	55	4403	77.0	1.00	1190	95.8	96.2	96.2	0.66	0.76	0.80	603
550	400	3585	588/9TS	795	G	7.4	2.3	2.7	155	33	73	4410	89.0	1.00	3585	96.0	96.5	96.5	0.84	0.89	0.90	578
		1790	586/7T	1592	G	7.1	2.2	2.5	236	16	35	4335	78.0	1.00	1790	96.2	96.4	96.5	0.74	0.82	0.86	605
		1790	586/7TS	1592	G	7.1	2.2	2.5	236	16	35	4335	78.0	1.00	1790	96.2	96.4	96.5	0.74	0.82	0.86	605
		1190	588/9T	2395	G	6.5	2.2	2.3	389	30	66	4734	77.0	1.00	1190	95.2	96.0	96.1	0.63	0.74	0.79	661
		1190	588/9TS	2395	G	6.5	2.2	2.3	389	30	66	4734	77.0	1.00	1190	95.2	96.0	96.1	0.63	0.74	0.79	661
600	440	3585	588/9TS	867	H	7.4	2.3	2.7	155	33	73	4410	89.0	1.00	3585	96.0	96.5	96.5	0.84	0.89	0.90	650
		1790	586/7T	1737	G	7.1	2.2	2.5	236	16	35	4335	78.0	1.00	1790	96.2	96.4	96.5	0.74	0.82	0.86	665
		1790	586/7TS	1737	G	7.1	2.2	2.5	236	16	35	4335	78.0	1.00	1790	96.2	96.4	96.5	0.74	0.82	0.86	665
		1190	588/9T	2612	H	6.5	2.2	2.3	449	31	68	5173	77.0	1.00	1190	95.4	96.1	96.2	0.63	0.74	0.79	743
		1190	588/9TS	2612	H	6.5	2.2	2.3	449	31	68	5173	77.0	1.00	1190	95.4	96.1	96.2	0.63	0.74	0.79	743

Continued on next page

W22 TEFC - Cast Iron - Three Phase - NEMA Premium continued

Valid for lines:

THREE-PHASE GENERAL PURPOSE and SEVERE DUTY MOTORS
TEFC – Foot Mount
TEFC – C-Flange – Foot Mount
TEFC – C-Flange – Footless

COOLING TOWER - THREE PHASE
TEFC - Three-Phase - Foot Mount - NEMA Premium
TEAO - Three-Phase - Foot Mount - NEMA Premium

CLOSE-COUPLE PUMP - THREE PHASE - TYPE JM & JP
TEFC – NEMA Premium

CRUSHER DUTY - THREE PHASE
TEFC - Foot Mount - NEMA Premium

IEEE 841 - Three-Phase
TEFC - Foot Mount - NEMA Premium
TEFC - C-Flange - Foot Mount - NEMA Premium
TEFC - C-Flange - Footless - NEMA Premium

Output		Rated Speed (rpm)	Frame	Full Load Torque (ft.lb)	LockedRotor Current		Locked Rotor Torque Tl/Tn	Break-down Torque Tb/Tn	Inertia J (lb-ft2)	Allowable locked rotor time (s)		Weight (lb)	Sound dB(A)	Service Factor	460 V								
															Rated speed (rpm)	% of full load						Full load current In (A)
																Efficiency			Power Factor			
HP	kW				Code	Il/In				Hot	Cold					50	75	100	50	75	100	
		3585	588/9TS	939	G	7.1	2.0	2.4	176	56	123	4635	89.0	1.00	3585	96.1	96.6	96.6	0.86	0.90	0.91	685
650	480	1790	588/9T	1881	H	7.4	2.5	2.7	301	22	48	4395	81.0	1.00	1790	96.0	96.5	96.6	0.71	0.81	0.85	734
		1790	588/9TS	1881	H	7.4	2.5	2.7	301	22	48	4395	81.0	1.00	1790	96.0	96.5	96.6	0.71	0.81	0.85	734
		3585	588/9TS*	1012	G	7.2	2.3	2.5	183	34	75	4805	89.0	1.00	3585	96.2	96.6	96.6	0.86	0.90	0.91	736
700	515.2	1790	588/9T	2026	G	7.0	2.5	2.6	335	23	51	4584	81.0	1.00	1790	96.2	96.5	96.6	0.71	0.81	0.85	788
		1790	588/9TS	2026	G	7.0	2.5	2.6	335	23	51	4584	81.0	1.00	1790	96.2	96.5	96.6	0.71	0.81	0.85	788
750	550	1790	588/9T	2171	G	7.0	2.4	2.5	347	29	64	4952	81.0	1.00	1790	96.3	96.6	96.7	0.70	0.80	0.85	840
		1790	588/9TS	2171	G	7.0	2.4	2.5	347	29	64	4952	81.0	1.00	1790	96.3	96.6	96.7	0.70	0.80	0.85	840

Data subject to change without notice.

Valid for lines:

GENERAL PURPOSE - THREE PHASE
TEFC – Foot Mount - NEMA Premium - Rolled Steel
TEFC – C-Flange – Foot Mount - NEMA Premium - Rolled Steel
TEFC – C-Flange – Footless - NEMA Premium - Rolled Steel

HVAC MOTORS - WITH INTERNAL AEGIS® SGR
TEFC - Three-Phase - Foot Mount

Output		Rated Speed (rpm)	Frame	Full Load Torque (ft.lb)	LockedRotor Current		Locked Rotor Torque Tl/Tn	Break-down Torque Tb/Tn	Inertia J (lb-ft2)	Allowable locked rotor time (s)		Weight (lb)	Sound dB(A)	Service Factor	460 V							
															Rated speed (rpm)	% of full load						Full load current In (A)
																Efficiency			Power Factor			
HP	kW				Code	Il/In				Hot	Cold					50	75	100	50	75	100	
1	0.75	3510	143/5T	1.48	K	7.8	2.0	3.0	0.0643	22	48	26.2	---	1.15	3510	72.0	77.0	78.5	0.65	0.76	0.83	1.44
		1765	143/5T	2.94	M	8.6	2.8	3.0	0.1232	19	42	37.9	---	1.15	1765	82.5	84.0	85.5	0.52	0.66	0.75	1.47
		1145	143/5T	4.52	J	5.8	2.3	2.8	0.1597	31	68	38.6	---	1.15	1145	80.0	82.5	82.5	0.50	0.63	0.72	1.58
1.5	1.1	3520	143/5T	2.21	L	9.1	2.3	3.0	0.1023	17	37	34.2	---	1.15	3520	80.0	82.5	84.0	0.71	0.82	0.88	1.87
		1750	143/5T	4.44	K	8.2	2.7	3.0	0.1101	21	46	37.9	---	1.15	1750	85.5	86.5	86.5	0.59	0.72	0.79	2.02
		1170	182/4T	6.64	K	6.9	2.4	3.4	0.2800	55	121	65.9	---	1.15	1170	84.0	86.5	87.5	0.50	0.63	0.71	2.22
2	1.5	3520	143/5T	2.94	L	9.9	2.5	3.0	0.1279	13	29	40.1	---	1.15	3520	82.5	85.5	85.5	0.73	0.83	0.89	2.47
		1745	143/5T	5.94	K	8.2	2.7	3.0	0.1296	15	33	42.3	---	1.15	1745	85.5	87.5	86.5	0.60	0.73	0.80	2.72
		1170	182/4T	8.86	K	7.5	2.6	3.7	0.3424	44	97	76.1	---	1.15	1170	84.0	86.5	88.5	0.50	0.62	0.71	3.00
3	2.2	3515	182/4T	4.42	K	8.8	2.2	3.0	0.1564	22	48	63.5	---	1.15	3515	84.0	86.5	86.5	0.71	0.82	0.87	3.67
		3500	143/5T	4.44	K	9.5	3.0	3.8	0.0000	10	22	48.1	---	1.15	3500	84.0	86.5	86.5	0.78	0.87	0.91	3.51
		1765	182/4T	8.81	K	8.8	2.2	3.0	0.4017	18	40	80.3	---	1.15	1765	87.5	88.5	89.5	0.61	0.74	0.81	3.81
		1175	213/5T	13.2	H	6.4	2.3	2.9	1.08	46	101	130	---	1.15	1175	85.5	88.5	89.5	0.55	0.67	0.74	4.17
5	3.7	3500	182/4T	7.40	J	7.8	2.2	3.0	0.2079	17	37	78.5	---	1.15	3500	87.5	88.5	88.5	0.76	0.85	0.89	5.90
		1750	182/4T	14.8	J	7.0	2.2	3.0	0.3080	16	35	71.4	---	1.15	1750	88.5	89.5	89.5	0.60	0.73	0.80	6.49
		1175	213/5T	22.0	H	6.0	2.2	2.5	1.26	30	66	144	---	1.15	1175	87.5	88.5	89.5	0.59	0.71	0.77	6.74
7.5	5.5	3530	213/5T	11.0	H	7.6	2.6	3.0	0.5496	15	33	133	---	1.15	3530	87.5	88.5	89.5	0.76	0.85	0.89	8.67
		3480	182/4T	11.2	J	8.0	2.7	3.6	0.0000	19	42	79.4	---	1.15	3480	88.5	89.5	89.5	0.77	0.86	0.90	8.57
		1770	213/5T	22.0	H	7.3	2.6	3.0	0.9380	22	48	120	---	1.15	1770	90.2	91.0	91.7	0.64	0.76	0.83	9.07
		1175	254/6T	33.1	G	5.4	2.0	2.3	2.34	42	92	204	---	1.15	1175	89.5	89.5	91.0	0.58	0.70	0.76	9.98
10	7.5	3530	213/5T	14.7	H	7.5	2.6	3.0	0.7188	12	26	161	---	1.15	3530	89.5	90.2	90.2	0.80	0.88	0.91	11.5
		1760	213/5T	29.4	H	7.0	2.5	3.0	1.07	15	33	130	---	1.15	1760	91.0	91.0	91.7	0.67	0.78	0.84	12.2
		1175	254/6T	44.1	G	5.4	2.1	2.3	2.83	30	66	234	---	1.15	1175	90.2	91.0	91.0	0.57	0.69	0.75	13.8
15	11	3525	254/6T	22.0	H	7.0	2.0	3.0	0.8718	14	31	175	---	1.15	3525	89.5	91.0	91.0	0.73	0.83	0.87	17.4
		3520	213/5T	22.1	J	8.2	2.8	3.3	0.0000	11	24	154	---	1.15	3520	90.2	91.0	91.0	0.76	0.85	0.89	17.0
		1770	254/6T	43.9	H	6.6	2.5	3.0	2.15	19	42	197	---	1.15	1770	91.0	92.4	92.4	0.64	0.76	0.82	18.2
20	15	3515	254/6T	29.5	G	6.6	2.0	2.9	1.22	12	26	211	---	1.15	3515	90.0	91.0	91.0	0.81	0.88	0.91	22.7
		1765	254/6T	58.7	G	6.3	2.7	3.0	2.64	16	35	227	---	1.15	1765	91.7	92.4	92.4	0.66	0.77	0.83	24.5
25	18.5	3530	254/6T	36.7	J	8.3	2.4	3.4	0.0000	8	18	221	---	1.15	3530	91.0	91.7	91.7	0.77	0.85	0.89	28.5

ODP - Three Phase - NEMA Premium

Valid for lines:

THREE-PHASE GENERAL PURPOSE MOTORS
ODP – Foot Mount
ODP – C-Face - Foot Mount

CLOSE-COUPLE PUMP - THREE PHASE - TYPE JM & JP
ODP – NEMA Premium

COMPRESSOR DUTY MOTORS
ODP - Three Phase – Foot Mount - NEMA Premium

HVAC MOTORS - WITH INTERNAL AEGIS® SGR
TEFC - Three-Phase - Foot Mount

Output		Rated Speed (rpm)	Frame	Full Load Torque (ft.lb)	LockedRotor Current		Locked Rotor Torque Tl/Tn	Break-down Torque Tb/Tn	Inertia J (lb-ft2)	Allowable locked rotor time (s)		Weight (lb)	Sound dB(A)	Service Factor	460 V								
															Rated speed (rpm)	% of full load						Full load current In (A)
																Efficiency			Power Factor			
HP	kW				Code	Il/In				Hot	Cold					50	75	100	50	75	100	
1	0.75	3510	143/5T	1.48	K	8.3	2.1	3.3	0.0643	22	48	25.4	---	1.15	3510	77.0	81.5	81.5	0.66	0.78	0.85	1.36
		1760	143/5T	2.94	L	8.0	2.9	3.6	0.1101	22	48	34.4	---	1.15	1760	81.5	84.0	85.5	0.51	0.65	0.73	1.51
		1150	143/5T	4.51	K	6.1	2.5	3.0	0.1419	24	53	35.3	---	1.15	1150	78.5	81.5	82.5	0.47	0.60	0.69	1.65
1.5	1.1	3510	143/5T	2.21	K	8.6	2.1	3.3	0.0835	19	42	29.3	---	1.15	3510	81.5	84.0	84.0	0.73	0.83	0.89	1.85
		1760	143/5T	4.42	L	8.7	2.8	3.3	0.1426	15	33	41.9	---	1.15	1760	84.0	86.5	86.5	0.56	0.69	0.77	2.07
		1165	182/4T	6.67	J	6.5	2.0	3.1	0.2178	46	101	56.0	---	1.15	1165	84.0	85.5	86.5	0.51	0.63	0.71	2.25
2	1.5	3510	143/5T	2.95	K	8.9	2.2	3.3	0.1151	14	31	36.8	---	1.15	3510	84.0	85.5	85.5	0.77	0.86	0.91	2.42
		1740	143/5T	5.96	K	7.7	2.6	3.2	0.1168	17	37	39.0	---	1.15	1740	85.5	86.5	86.5	0.61	0.74	0.81	2.69
		1165	182/4T	8.89	J	6.6	2.0	3.0	0.2800	33	73	66.1	---	1.15	1165	85.5	86.5	87.5	0.53	0.66	0.73	2.95
3	2.2	3480	143/5T	4.47	J	8.0	2.3	3.0	0.1279	9	20	39.9	---	1.15	3480	84.0	85.5	85.5	0.76	0.86	0.90	3.59
		1765	182/4T	8.81	K	8.4	2.2	3.3	0.3092	15	33	65.9	---	1.15	1765	87.5	88.5	89.5	0.60	0.73	0.80	3.86
		1175	213/5T	13.2	H	5.9	2.1	2.6	0.8104	39	86	98.3	---	1.15	1175	86.5	87.5	88.5	0.56	0.68	0.75	4.16
5	3.7	3510	182/4T	7.38	J	7.6	1.9	3.0	0.1386	12	26	58.7	---	1.15	3510	85.5	86.5	86.5	0.73	0.83	0.88	6.10
		1760	182/4T	14.7	J	7.2	2.0	3.1	0.4003	12	26	79.8	---	1.15	1760	88.5	88.5	89.5	0.63	0.76	0.82	6.33
		1175	213/5T	22.0	H	5.9	2.2	2.5	1.08	29	64	118	---	1.15	1175	88.5	89.5	89.5	0.58	0.70	0.77	6.74
7.5	5.5	3500	182/4T	11.1	H	7.4	1.8	2.9	0.1818	10	22	69.9	---	1.15	3500	88.5	88.5	88.5	0.76	0.85	0.90	8.67
		1770	213/5T	22.0	H	7.2	2.4	3.2	1.03	13	29	116	---	1.15	1770	89.5	90.2	91.0	0.65	0.77	0.83	9.14
		1175	254/6T	33.1	F	5.1	2.0	2.3	2.00	37	81	187	---	1.15	1175	88.5	90.2	90.2	0.56	0.68	0.75	10.2
		1175	254T	33.1	J	6.9	2.4	3.0	2.73	12	26	232	56.0	1.15	1175	87.5	89.5	90.2	0.59	0.72	0.79	9.69
10	7.5	3535	213/5T	14.7	H	6.8	2.0	2.8	0.4651	11	24	117	---	1.15	3535	88.5	89.5	89.5	0.74	0.84	0.88	12.0
		1770	213/5T	29.3	H	7.0	2.5	3.5	1.30	14	31	137	---	1.15	1770	90.2	91.0	91.7	0.64	0.77	0.83	12.4
		1180	254/6T	43.9	G	5.3	2.1	2.3	2.50	34	75	209	---	1.15	1180	91.0	91.7	91.7	0.56	0.68	0.74	13.9
		1175	256T	44.1	H	6.6	2.3	2.8	3.41	12	26	251	57.0	1.15	1175	90.2	91.0	91.7	0.62	0.74	0.80	12.8
15	11	3535	213/5T	22.0	H	6.9	2.1	2.8	0.5512	8	18	131	---	1.15	3535	90.2	90.2	90.2	0.77	0.86	0.89	17.2
		1775	254/6T	43.8	H	6.7	2.4	3.0	1.82	17	37	175	---	1.15	1775	91.7	92.4	93.0	0.63	0.75	0.81	18.3
		1775	254T	43.8	H	6.7	2.9	3.0	2.08	14	31	242	59.0	1.15	1775	91.7	92.4	93.0	0.60	0.72	0.80	18.6
		1180	284T	65.9	G	6.6	2.6	2.8	5.56	12	26	364	58.0	1.15	1180	89.5	91.0	91.7	0.72	0.81	0.85	17.7
20	15	3525	254/6T	29.4	F	5.8	1.8	2.4	0.7848	13	29	151	---	1.15	3525	90.2	91.0	91.0	0.76	0.83	0.87	23.8
		3520	254T	29.4	G	6.0	1.9	2.5	0.7328	12	26	203	66.0	1.15	3520	89.5	90.2	91.0	0.71	0.80	0.84	24.6
		1770	256T	58.5	G	6.3	2.6	2.8	2.62	12	26	121	60.0	1.15	1770	91.7	93.0	93.0	0.63	0.72	0.82	24.7
		1175	286T	88.2	G	6.3	2.2	2.4	7.20	18	40	397	58.0	1.15	1175	91.7	92.4	92.4	0.74	0.83	0.85	24.0
		1170	254/6T	88.6	G	6.3	2.4	2.9	2.23	15	33	198	---	1.15	1170	92.4	92.4	93.0	0.65	0.77	0.82	24.7

Continued on next page

Data subject to change without notice.

Valid for lines:

THREE-PHASE GENERAL PURPOSE MOTORS
ODP – Foot Mount
ODP – C-Face - Foot Mount

CLOSE-COUPLE PUMP - THREE PHASE - TYPE JM & JP
ODP – NEMA Premium

COMPRESSOR DUTY MOTORS
ODP - Three Phase – Foot Mount - NEMA Premium

HVAC MOTORS - WITH INTERNAL AEGIS® SGR
TEFC - Three-Phase - Foot Mount

Output		Rated Speed (rpm)	Frame	Full Load Torque (ft.lb)	LockedRotor Current		Locked Rotor Torque Tl/Tn	Break-down Torque Tb/Tn	Inertia J (lb-ft2)	Allowable locked rotor time (s)		Weight (lb)	Sound dB(A)	Service Factor	460 V								
															Rated speed (rpm)	% of full load						Full load current In (A)
																Efficiency			Power Factor			
HP	kW				Code	II/In				Hot	Cold					50	75	100	50	75	100	
25	18.5	3530	254/6T	36.7	G	6.3	1.8	2.9	0.9155	9	20	174	---	1.15	3530	91.0	91.7	91.7	0.73	0.83	0.87	29.1
		3530	256T	36.7	G	6.5	2.0	2.6	1.08	9	20	242	67.0	1.15	3530	91.0	91.7	91.7	0.73	0.82	0.85	29.8
		1770	284T	73.2	H	6.7	2.5	2.8	3.41	15	33	362	62.0	1.15	1770	92.4	93.0	93.6	0.67	0.78	0.83	29.9
		1770	284TS	73.2	H	6.7	2.5	2.8	3.41	15	33	342	62.0	1.15	1770	92.4	93.0	93.6	0.67	0.78	0.83	29.9
		1180	324T	110	G	6.0	2.0	2.4	8.51	18	40	463	60.0	1.15	1180	91.7	92.4	93.0	0.67	0.77	0.82	30.4
30	22	3540	284TS	43.9	G	6.4	2.2	2.8	1.89	10	22	298	72.0	1.15	3540	92.4	93.0	92.4	0.77	0.84	0.86	34.7
		1770	286T	87.8	G	6.7	2.6	2.8	4.90	14	31	394	63.0	1.15	1770	93.6	94.1	94.1	0.70	0.80	0.83	35.4
		1770	286TS	87.8	G	6.7	2.6	2.8	4.90	14	31	419	63.0	1.15	1770	93.6	94.1	94.1	0.70	0.80	0.83	35.4
		1180	326T	132	G	6.2	2.2	2.7	9.79	17	37	573	60.0	1.15	1180	91.7	93.0	93.6	0.65	0.77	0.82	36.0
40	30	3535	286TS	58.6	G	6.4	2.0	2.6	2.36	10	22	357	73.0	1.15	3535	91.7	93.0	93.0	0.74	0.83	0.86	47.1
		1775	324T	117	G	6.2	2.2	2.3	6.05	28	62	545	64.0	1.15	1775	93.6	94.1	94.1	0.68	0.78	0.83	48.2
		1775	324TS	117	G	6.2	2.2	2.3	6.05	28	62	507	64.0	1.15	1775	93.6	94.1	94.1	0.68	0.78	0.83	48.2
		1185	364/5T	175	G	6.7	2.1	2.6	23.5	24	53	739	67.0	1.15	1185	93.6	94.1	94.1	0.71	0.80	0.85	47.1
50	37	3555	324TS	72.9	G	6.4	2.2	2.6	3.83	28	62	532	74.0	1.15	3555	92.4	93.6	93.6	0.74	0.82	0.84	59.1
		1775	326T	146	G	6.3	2.4	2.5	7.04	12	26	565	65.0	1.15	1775	94.1	94.5	94.5	0.70	0.79	0.82	59.9
		1775	326TS	146	G	6.3	2.4	2.5	7.04	12	26	573	65.0	1.15	1775	94.1	94.5	94.5	0.70	0.79	0.82	59.9
		1185	364/5T	219	G	6.5	2.0	2.5	25.7	18	40	862	68.0	1.15	1185	93.6	94.1	94.1	0.72	0.81	0.84	58.8
60	45	3555	326TS	87.4	G	6.2	2.0	2.6	4.36	24	53	526	75.0	1.15	3555	93.0	93.6	93.6	0.77	0.84	0.85	71.0
		1780	364T	175	G	6.7	2.5	3.0	15.6	15	33	643	68.0	1.15	1780	94.5	94.5	95.0	0.74	0.83	0.85	69.9
		1780	364TS	175	G	6.7	2.5	3.0	15.6	15	33	825	68.0	1.15	1780	94.5	94.5	95.0	0.74	0.83	0.85	69.9
		1780	364/5T	175	G	6.7	2.5	3.0	15.6	15	33	643	68.0	1.15	1780	94.5	94.5	95.0	0.74	0.83	0.85	69.9
		1185	404/5T	262	G	6.5	2.1	2.5	30.2	16	35	915	69.0	1.15	1185	94.1	94.5	94.5	0.73	0.82	0.85	70.3
75	55	3550	364TS	109	G	6.5	1.8	2.8	6.81	14	31	526	80.0	1.15	3550	93.6	94.1	94.1	0.83	0.88	0.90	81.5
		1780	365T	218	G	6.7	2.1	2.6	19.5	14	31	649	68.0	1.15	1780	94.5	95.0	95.0	0.76	0.84	0.87	83.5
		1780	365TS	218	G	6.7	2.1	2.6	19.5	14	31	825	68.0	1.15	1780	94.5	95.0	95.0	0.76	0.84	0.87	83.5
		1180	404/5T	329	G	6.8	2.4	2.7	27.9	14	31	1080	69.0	1.15	1180	94.1	94.5	94.5	0.72	0.81	0.85	85.9
100	75	3550	365TS	146	G	6.7	1.9	2.8	8.30	12	26	587	83.0	1.15	3550	94.1	94.5	94.5	0.84	0.89	0.90	111
		1780	404T	291	G	6.7	2.3	2.7	22.8	10	22	1003	69.0	1.15	1780	95.0	95.4	95.4	0.77	0.84	0.87	113
		1780	404TS	291	G	6.7	2.3	2.7	22.8	10	22	1052	69.0	1.15	1780	95.0	95.4	95.4	0.77	0.84	0.87	113
		1190	444/5T	435	G	5.7	2.1	2.4	43.8	18	40	1486	77.0	1.15	1190	94.5	95.0	95.0	0.62	0.74	0.79	125

Continued on next page

ODP - Three Phase - NEMA Premium continued

Valid for lines:

THREE-PHASE GENERAL PURPOSE MOTORS
ODP – Foot Mount
ODP – C-Face - Foot Mount

CLOSE-COUPLE PUMP - THREE PHASE - TYPE JM & JP
ODP – NEMA Premium

COMPRESSOR DUTY MOTORS
ODP - Three Phase – Foot Mount - NEMA Premium

HVAC MOTORS - WITH INTERNAL AEGIS® SGR
TEFC - Three-Phase - Foot Mount

Output		Rated Speed (rpm)	Frame	Full Load Torque (ft.lb)	LockedRotor Current		Locked Rotor Torque Tl/Tn	Break-down Torque Tb/Tn	Inertia J (lb-ft2)	Allowable locked rotor time (s)		Weight (lb)	Sound dB(A)	Service Factor	460 V								
															Rated speed (rpm)	% of full load						Full load current In (A)
																Efficiency			Power Factor			
HP	kW				Code	Il/In				Hot	Cold					50	75	100	50	75	100	
125	90	3550	404TS	182	G	6.5	1.8	2.8	10.2	11	24	986	84.0	1.15	3550	94.1	94.5	94.5	0.86	0.89	0.90	136
		1780	405T	364	G	7.0	2.4	2.5	26.6	10	22	1087	69.0	1.15	1780	95.0	95.4	95.4	0.76	0.85	0.87	136
		1780	405TS	364	G	7.0	2.4	2.5	26.6	10	22	1144	69.0	1.15	1780	95.0	95.4	95.4	0.76	0.85	0.87	136
		1185	444/5T	547	H	6.7	2.4	2.4	70.9	20	44	1740	78.0	1.15	1185	94.5	95.0	95.0	0.60	0.72	0.78	158
150	110	3555	405TS	219	G	6.6	1.9	2.5	11.9	10	22	1246	84.0	1.15	3555	94.5	94.5	94.5	0.86	0.89	0.90	162
		1785	444T	435	G	6.6	2.0	2.4	49.5	19	42	1484	78.0	1.15	1785	95.4	95.8	95.8	0.77	0.84	0.87	166
		1785	444TS	435	G	6.6	2.0	2.4	49.5	19	42	1433	78.0	1.15	1785	95.4	95.8	95.8	0.77	0.84	0.87	166
		1185	444/5T	656	H	6.6	2.2	2.4	57.2	18	40	2007	79.0	1.15	1185	94.5	95.0	95.4	0.62	0.73	0.79	183
200	150	3575	444TS	290	G	6.5	1.9	2.5	25.7	20	44	1537	88.0	1.15	3575	93.6	94.5	95.0	0.81	0.87	0.89	223
		1780	445T	582	F	6.1	2.0	2.3	49.5	16	35	1740	78.0	1.15	1780	95.4	95.8	95.8	0.76	0.83	0.86	229
		1780	445TS	582	F	6.1	2.0	2.3	49.5	16	35	1740	78.0	1.15	1780	95.4	95.8	95.8	0.76	0.83	0.86	229
		1185	447/9T	874	F	5.8	2.0	2.2	98.2	18	40	2205	79.0	1.15	1185	95.0	95.4	95.4	0.69	0.78	0.82	241
250	185	3564	445TS	363	F	6.0	1.9	2.5	30.2	18	40	1806	88.0	1.15	3564	94.1	95.0	95.0	0.84	0.88	0.90	272
		1780	445T	728	G	7.0	2.1	2.5	57.2	14	31	2029	78.0	1.15	1780	95.4	95.8	95.8	0.81	0.86	0.88	275
		1780	445TS	728	G	7.0	2.1	2.5	57.2	14	31	2029	78.0	1.15	1780	95.4	95.8	95.8	0.81	0.86	0.88	275
		1185	447/9T	1093	G	6.5	2.2	2.4	115	18	40	2426	79.0	1.15	1185	95.4	95.8	95.4	0.67	0.77	0.81	300
300	220	3565	445TS	436	F	6.3	2.0	2.6	33.5	16	35	2007	89.0	1.15	3565	94.5	95.4	95.4	0.84	0.89	0.90	322
		1780	447/9T	873	G	7.1	2.2	2.3	56.1	10	22	2095	77.0	1.15	1780	95.8	95.8	95.8	0.81	0.87	0.89	324
		1780	447/9TS	873	G	7.1	2.2	2.3	56.1	10	22	2095	77.0	1.15	1780	95.8	95.8	95.8	0.81	0.87	0.89	324
		1185	447/9T	1312	H	6.7	2.2	2.4	131	18	40	2646	79.0	1.15	1185	95.4	95.8	95.4	0.67	0.77	0.81	357
350	260	3565	447/9TS	509	G	6.5	1.7	2.5	35.7	14	31	1819	87.0	1.15	3565	95.0	95.4	95.4	0.83	0.88	0.89	384
		1780	447/9T	1019	F	6.6	2.0	2.3	66.1	10	22	2315	77.0	1.15	1780	95.8	95.8	95.8	0.79	0.85	0.87	360
		1780	447/9TS	1019	F	6.6	2.0	2.3	66.1	10	22	2315	77.0	1.15	1780	95.8	95.8	95.8	0.79	0.85	0.87	360
		1190	5010/11T	1524	G	6.2	2.0	2.1	0.0000	15	33	3308	---	1.15	1190	95.4	95.8	95.8	0.71	0.80	0.84	406
400	300	3565	447/9TS	581	G	6.5	1.7	2.5	39.1	14	31	1985	87.0	1.15	3565	95.4	95.8	95.8	0.83	0.88	0.89	442
		1780	447/9T	1164	G	6.8	2.3	2.3	77.6	9	20	2536	77.0	1.15	1780	95.8	95.8	95.8	0.78	0.85	0.87	452
		1780	447/9TS	1164	G	6.8	2.3	2.3	77.6	9	20	2536	77.0	1.15	1780	95.8	95.8	95.8	0.78	0.85	0.87	452
		1190	5010/11T	1741	G	6.3	2.1	2.1	0.0000	15	33	3749	---	1.15	1190	95.4	95.8	95.8	0.71	0.80	0.84	468
450	330	3565	447/9TS	654	G	6.8	1.8	2.5	43.6	14	31	2073	87.0	1.15	3565	95.8	96.2	96.2	0.84	0.89	0.90	478
		1787	5010/11T	1305	G	6.8	2.2	2.2	118	18	40	3087	80.0	1.15	1787	95.4	95.8	96.2	0.73	0.82	0.85	507
		1190	5010/11T*	1959	G	6.5	2.3	2.3	0.0000	15	33	3749	---	1.00	1190	95.4	95.8	95.8	0.68	0.78	0.82	527

Continued on next page

Data subject to change without notice.

Valid for lines:

THREE-PHASE GENERAL PURPOSE MOTORS
ODP – Foot Mount
ODP – C-Face - Foot Mount

CLOSE-COUPLE PUMP - THREE PHASE - TYPE JM & JP
ODP – NEMA Premium

COMPRESSOR DUTY MOTORS
ODP - Three Phase – Foot Mount - NEMA Premium

HVAC MOTORS - WITH INTERNAL AEGIS® SGR
TEFC - Three-Phase - Foot Mount

Output		Rated Speed (rpm)	Frame	Full Load Torque (ft.lb)	LockedRotor Current		Locked Rotor Torque Tl/Tn	Break-down Torque Tb/Tn	Inertia J (lb-ft2)	Allowable locked rotor time (s)		Weight (lb)	Sound dB(A)	Service Factor	460 V								
															Rated speed (rpm)	% of full load						Full load current In (A)
																Efficiency			Power Factor			
HP	kW				Code	II/In				Hot	Cold					50	75	100	50	75	100	
500	370	3570	447/9TS	726	G	7.1	1.9	2.5	46.9	14	31	2139	87.0	1.15	3570	95.8	96.2	96.2	0.84	0.89	0.90	536
		1787	5010/11T	1450	H	7.0	2.3	2.3	131	17	37	3308	80.0	1.15	1787	95.4	95.8	96.2	0.73	0.82	0.85	568
550	400	3565	447/9TS	799	G	7.2	2.0	2.5	50.3	14	31	2271	87.0	1.15	3565	95.8	96.2	96.2	0.84	0.89	0.90	580
		1787	5010/11T	1595	G	6.8	2.2	2.2	144	16	35	3528	80.0	1.15	1787	95.6	96.2	96.2	0.76	0.84	0.87	600
600	440	3570	447/9TS	871	H	7.9	2.0	2.7	53.6	14	31	2359	87.0	1.15	3570	95.8	96.2	96.2	0.83	0.89	0.90	638
		1787	5010/11T*	1740	G	6.8	2.2	2.2	157	12	26	3749	80.0	1.00	1787	95.8	96.2	96.2	0.76	0.84	0.87	660
		1785	L5010/11	1741	D	5.0	1.0	1.7	203	25	55	4851	80.0	1.15	1785	95.0	95.4	95.4	0.82	0.86	0.86	673
650	480	3570	5010/11TS	943	G	6.5	1.8	2.3	73.3	12	26	2977	89.0	1.15	3570	95.0	95.4	95.8	0.78	0.85	0.88	715
		1785	L5010/11	1887	D	5.0	1.0	1.7	232	25	55	5072	80.0	1.15	1785	95.0	95.4	95.4	0.82	0.86	0.86	734
700	515	3570	5010/11TS	1016	G	6.8	2.0	2.4	78.5	16	35	3418	89.0	1.15	3570	95.4	95.8	95.8	0.79	0.86	0.88	767
		1785	5810/11	2032	G	6.9	1.5	2.0	420	22	48	5954	94.0	1.15	1785	95.4	95.9	95.9	0.81	0.86	0.87	775
750	550	3580	5010/11TS	1085	H	7.5	2.1	2.6	89.0	12	26	3308	89.0	1.15	3580	95.4	96.0	96.0	0.76	0.83	0.87	827
		3575	L5010/11	1087	E	5.3	1.0	2.0	103	20	44	4190	89.0	1.15	3575	95.8	96.2	96.2	0.81	0.86	0.87	825
		1785	L5010/11	2177	E	5.2	1.0	1.7	249	25	55	5733	80.0	1.15	1785	95.4	95.8	95.8	0.81	0.86	0.86	853
		1785	5810/11	2177	G	7.0	1.5	2.0	442	22	48	6174	94.0	1.15	1785	95.4	95.9	95.9	0.81	0.86	0.87	827
800	590	3580	5810/11	1158	G	6.8	1.1	2.5	166	20	44	4300	94.0	1.15	3580	96.2	96.8	96.8	0.83	0.88	0.89	860
		3575	5010/11TS	1159	H	7.4	2.0	2.5	89.0	12	26	3528	89.0	1.15	3575	95.8	96.2	96.2	0.78	0.85	0.87	885
		3575	L5010/11	1159	E	5.3	1.0	2.0	111	20	44	4410	89.0	1.15	3575	95.8	96.2	96.2	0.81	0.86	0.87	885
		1785	L5010/11	2322	E	5.2	1.0	1.7	249	25	55	5954	80.0	1.00	1785	95.8	96.2	96.2	0.81	0.86	0.86	895
850	630	3575	5010/11TS*	1232	H	7.4	2.0	2.5	95.7	10	22	3638	89.0	1.00	3575	95.8	96.2	96.2	0.78	0.85	0.88	934
		1785	5810/11	2467	H	7.1	1.6	2.0	456	21	46	6615	94.0	1.15	1785	95.4	95.9	95.9	0.81	0.86	0.87	948
900	660	3580	5810/11	1302	G	6.8	1.1	2.5	198	20	44	4631	94.0	1.15	3580	96.2	96.8	96.8	0.83	0.87	0.89	962
		3575	5010/11TS*	1304	G	7.2	2.0	2.5	95.7	8	18	3749	89.0	1.00	3575	95.8	96.2	96.2	0.78	0.85	0.88	979
		3575	L5010/11	1304	E	5.2	1.0	1.9	123	20	44	4631	89.0	1.00	3575	95.8	96.5	96.5	0.80	0.85	0.87	987
970	710	1785	5810/11	2815	H	7.4	1.7	2.0	506	20	44	7166	94.0	1.00	1785	95.9	96.2	96.2	0.81	0.86	0.87	1060
100	750	3580	5810/11	1447	G	6.8	1.1	2.4	198	20	44	5182	94.0	1.15	3580	96.2	97.0	97.0	0.83	0.87	0.89	1070
		3575	L5010/11	1449	E	5.2	1.0	1.8	123	25	55	5072	89.0	1.00	3575	96.2	96.5	96.5	0.80	0.85	0.87	1120
1100	800	3580	5810/11	1592	G	6.8	1.2	2.4	241	20	44	6395	94.0	1.00	3580	96.5	97.0	97.0	0.84	0.87	0.89	1160
		1785	5810/11	3193	H	7.5	1.8	2.1	534	20	44	7718	94.0	1.00	1785	95.9	96.2	96.2	0.81	0.86	0.87	1200
1250	900	3580	5810/11	1809	G	6.8	1.1	2.4	253	20	44	6615	94.0	1.00	3580	96.5	97.0	97.0	0.86	0.88	0.89	1310

Valid for lines:

ODP High Efficiency (Close Couple Pump JM/JP)

Fire Pump ODP High Efficiency

ODP High Efficiency General Purpose (900 RPM and motors 250 HP or larger)

Output		Rated Speed (rpm)	Frame	Full Load Torque (ft.lb)	LockedRotor Current		Locked Rotor Torque Tl/Tn	Break-down Torque Tb/Tn	Inertia J (lb-ft2)	Allowable locked rotor time (s)		Weight (lb)	Sound dB(A)	Service Factor	460 V							
															Rated speed (rpm)	% of full load						Full load current In (A)
																Efficiency			Power Factor			
HP	kW				Code	Il/In				Hot	Cold					50	75	100	50	75	100	
1	0.75	3490	143/5T	1.48	K	7.5	2.4	3.2	0.0278	27	59	25.4	---	1.15	3490	77.0	80.0	80.0	0.69	0.80	0.87	1.35
		1760	143/5T	2.94	L	7.4	2.8	3.3	0.0907	0	0	30.0	---	1.15	1760	77.0	81.5	82.5	0.46	0.60	0.70	1.63
		1150	143/5T	4.51	K	5.9	2.2	2.9	0.1296	19	42	38.1	---	1.15	1150	77.0	80.0	80.0	0.47	0.60	0.69	1.71
1.5	1.1	3495	143/5T	2.22	J	7.8	2.4	3.2	0.0358	22	48	29.3	---	1.15	3495	81.5	82.5	82.5	0.73	0.84	0.89	1.88
		1755	143/5T	4.43	K	7.6	2.7	3.5	0.1168	12	26	35.9	---	1.15	1755	80.0	84.0	84.0	0.52	0.65	0.75	2.19
		1170	182/4T	6.64	K	6.8	2.0	3.1	0.3918	29	64	61.5	---	1.15	1170	81.5	84.0	84.0	0.49	0.62	0.71	2.31
2	1.5	3500	143/5T	2.96	K	8.0	2.5	3.4	0.0439	17	37	34.0	---	1.15	3500	82.5	84.0	84.0	0.74	0.84	0.89	2.52
		1745	143/5T	5.94	K	7.4	2.6	3.1	0.1296	10	22	39.0	---	1.15	1745	81.5	84.0	84.0	0.55	0.69	0.77	2.91
		1170	182/4T	8.86	K	6.9	2.1	3.1	0.4786	24	53	71.0	---	1.15	1170	82.5	85.5	85.5	0.51	0.64	0.72	3.06
3	2.2	3475	143/5T	4.47	J	7.8	2.5	3.1	0.0496	12	26	37.0	---	1.15	3475	84.0	84.0	84.0	0.73	0.84	0.89	3.69
		1765	182/4T	8.81	J	6.8	2.2	2.9	0.2164	0	0	50.7	---	1.15	1765	85.5	86.5	86.5	0.59	0.72	0.79	4.04
		1180	213/5T	13.2	J	6.5	2.3	2.7	0.9029	19	42	107	---	1.15	1180	84.0	85.5	86.5	0.52	0.66	0.74	4.31
5	3.7	3510	182/4T	7.38	H	7.0	1.8	2.9	0.1217	15	33	53.4	---	1.15	3510	85.5	86.5	85.5	0.71	0.82	0.87	6.24
		1750	182/4T	14.8	J	7.0	2.0	2.8	0.3080	9	20	66.4	---	1.15	1750	86.5	87.5	87.5	0.62	0.75	0.82	6.47
		1170	213/5T	22.1	G	5.5	2.1	2.4	0.9006	23	51	109	---	1.15	1170	86.5	87.5	87.5	0.58	0.70	0.77	6.89
7.5	5.5	3500	182/4T	11.1	H	7.0	1.8	2.8	0.1559	8	18	62.8	---	1.15	3500	87.5	88.5	87.5	0.74	0.84	0.89	8.86
		1760	213/5T	22.1	H	6.5	2.0	2.6	0.8040	10	22	101	---	1.15	1760	87.5	88.5	88.5	0.67	0.79	0.84	9.29
		1175	254/6T	33.1	G	5.0	2.0	2.3	0.0000	30	66	157	---	1.15	1175	86.5	88.5	88.5	0.53	0.65	0.72	10.8
		1175	254T	33.1	H	6.3	2.1	2.5	2.39	12	26	217	56.0	1.15	1175	87.5	88.5	88.5	0.61	0.74	0.81	9.63
10	7.5	3530	213/5T	14.7	G	6.4	1.8	2.6	0.3816	8	18	103	---	1.15	3530	87.5	88.5	88.5	0.72	0.83	0.87	12.2
		1760	213/5T	29.4	H	6.6	2.1	2.7	1.03	8	18	116	---	1.15	1760	89.5	90.2	89.5	0.68	0.79	0.85	12.4
		1180	254/6T	43.9	G	5.2	2.1	2.4	0.0000	28	62	184	---	1.15	1180	88.5	90.2	90.2	0.53	0.66	0.73	14.3
		1175	256T	44.1	H	6.2	2.0	2.5	2.73	12	26	237	57.0	1.15	1175	89.5	90.2	90.2	0.62	0.74	0.81	12.9
15	11	3525	213/5T	22.0	G	6.5	1.9	2.6	0.4651	6	13	117	---	1.15	3525	88.5	89.5	89.5	0.73	0.83	0.88	17.5
		1765	254T	44.0	G	6.0	2.3	2.5	1.55	17	37	221	59.0	1.15	1765	89.5	91.0	91.0	0.63	0.75	0.81	18.7
		1760	254/6T	44.2	F	5.4	1.9	2.3	0.0000	13	29	152	---	1.15	1760	90.2	91.0	91.0	0.66	0.77	0.82	18.5
		1180	284T	65.9	G	6.2	1.9	2.3	5.07	12	26	324	58.0	1.15	1180	89.5	90.2	90.2	0.72	0.81	0.85	18.0
20	15	3540	254T	29.3	G	5.8	1.9	2.5	0.8028	10	22	198	66.0	1.15	3540	89.5	90.2	90.2	0.74	0.83	0.86	24.3
		3520	254/6T	29.4	F	5.7	1.8	2.4	0.0000	9	20	151	---	1.15	3520	88.5	89.5	90.2	0.75	0.84	0.88	23.7
		1765	256T	58.7	G	5.6	2.3	2.5	1.85	12	26	251	60.0	1.15	1765	90.2	91.0	91.0	0.64	0.75	0.81	25.5
		1755	254/6T	59.0	F	5.1	1.9	2.2	0.0000	12	26	166	---	1.15	1755	91.0	91.0	91.0	0.68	0.79	0.83	24.9
		1175	286T	88.2	G	5.8	2.2	2.3	6.54	18	40	377	58.0	1.15	1175	91.0	91.7	91.0	0.73	0.81	0.85	24.3

Continued on next page

Data subject to change without notice.

Valid for lines:

ODP High Efficiency (Close Couple Pump JM/JP)

Fire Pump ODP High Efficiency

ODP High Efficiency General Purpose (900 RPM and motors 250 HP or larger)

Output		Rated Speed (rpm)	Frame	Full Load Torque (ft.lb)	LockedRotor Current		Locked Rotor Torque Tl/Tn	Break-down Torque Tb/Tn	Inertia J (lb-ft2)	Allowable locked rotor time (s)		Weight (lb)	Sound dB(A)	Service Factor	460 V							
																% of full load						
																Efficiency			Power Factor			Full load current In (A)
HP	kW				Code	II/In				Hot	Cold				Rated speed (rpm)	50	75	100	50	75	100	
25	18.5	3530	254/6T	36.7	G	6.3	1.8	2.8	0.0000	9	20	169	---	1.15	3530	90.2	91.0	91.0	0.75	0.84	0.88	29.0
		3530	256T	36.7	G	6.0	2.0	2.5	0.9774	10	22	230	67.0	1.15	3530	90.2	91.0	91.0	0.76	0.84	0.87	29.3
		1765	284T	73.4	G	6.0	2.2	2.5	2.77	13	29	271	62.0	1.15	1765	91.0	91.7	91.7	0.70	0.79	0.84	30.1
		1765	284TS	73.4	G	6.0	2.2	2.5	2.77	13	29	271	62.0	1.15	1765	91.0	91.7	91.7	0.70	0.79	0.84	30.1
		1180	324T	110	G	5.9	2.0	2.3	7.45	18	40	504	60.0	1.15	1180	91.0	91.7	91.7	0.65	0.77	0.82	30.9
30	22	3540	284TS	43.9	G	6.2	2.0	2.7	1.68	12	26	321	72.0	1.15	3540	91.0	91.0	91.0	0.80	0.86	0.88	34.5
		1770	286T	87.8	G	6.1	2.5	2.7	3.41	13	29	357	63.0	1.15	1770	91.7	92.4	92.4	0.72	0.81	0.84	35.6
		1770	286TS	87.8	G	6.1	2.5	2.7	3.41	13	29	357	63.0	1.15	1770	91.7	92.4	92.4	0.72	0.81	0.84	35.6
		1180	326T	132	G	5.8	2.0	2.2	8.94	17	37	524	60.0	1.15	1180	91.7	92.4	92.4	0.65	0.76	0.81	36.9
40	30	3535	286TS	58.6	F	5.9	1.9	2.6	2.16	16	35	359	73.0	1.15	3535	91.7	91.7	91.7	0.81	0.87	0.89	46.1
		1775	324T	117	G	5.8	2.1	2.2	5.40	24	53	450	64.0	1.15	1775	92.4	93.0	93.0	0.67	0.77	0.82	49.4
		1775	324TS	117	G	5.8	2.1	2.2	5.40	24	53	450	64.0	1.15	1775	92.4	93.0	93.0	0.67	0.77	0.82	49.4
		1180	364T	176	G	6.0	1.8	2.2	19.0	24	53	567	67.0	1.15	1180	92.4	93.0	93.0	0.71	0.80	0.84	48.2
50	37	3560	324TS	72.8	G	6.2	2.2	2.4	3.30	28	62	518	74.0	1.15	3560	91.0	92.4	92.4	0.75	0.83	0.86	58.4
		1770	326T	146	F	5.6	2.0	2.1	5.73	18	40	538	65.0	1.15	1770	92.4	93.0	93.0	0.70	0.80	0.83	60.2
		1770	326TS	146	F	5.6	2.0	2.1	5.73	18	40	538	65.0	1.15	1770	92.4	93.0	93.0	0.70	0.80	0.83	60.2
		1185	365T	219	G	6.0	1.9	2.2	21.8	18	40	611	68.0	1.15	1185	92.4	93.0	93.0	0.70	0.80	0.84	59.4
		1185	365TS	219	G	6.0	1.9	2.2	21.8	18	40	611	68.0	1.15	1185	92.4	93.0	93.0	0.70	0.80	0.84	59.4
60	45	3555	326TS	87.4	G	6.0	2.3	2.5	3.94	17	37	517	75.0	1.15	3555	92.4	93.0	93.0	0.77	0.84	0.86	70.6
		1780	364T	175	G	6.1	2.2	2.6	12.5	16	35	633	67.0	1.15	1780	92.4	93.6	93.6	0.73	0.83	0.86	70.2
		1780	364TS	175	G	6.1	2.2	2.6	12.5	16	35	633	67.0	1.15	1780	92.4	93.6	93.6	0.73	0.83	0.86	70.2
		1780	364/5T	175	G	6.1	2.2	2.6	12.5	16	35	633	67.0	1.15	1780	92.4	93.6	93.6	0.73	0.83	0.86	70.2
		1180	404T	263	G	6.2	2.0	2.3	27.9	16	35	904	69.0	1.15	1180	93.0	93.6	93.6	0.72	0.81	0.85	71
75	55	3555	364TS	109	G	6.3	1.8	2.7	6.81	15	33	524	80.0	1.15	3555	92.4	93.0	93.0	0.80	0.86	0.88	84.3
		1780	364/5T	218	G	6.3	2.4	2.8	16.2	17	37	825	68.0	1.15	1780	93.6	94.1	94.1	0.74	0.82	0.86	85.3
		1780	365T	218	G	6.3	2.4	2.8	16.2	17	37	825	68.0	1.15	1780	93.6	94.1	94.1	0.74	0.82	0.86	85.3
		1780	365TS	218	G	6.3	2.4	2.8	16.2	17	37	825	68.0	1.15	1780	93.6	94.1	94.1	0.74	0.82	0.86	85.3
		1180	405T	329	G	6.1	2.0	2.2	27.9	14	31	949	69.0	1.15	1180	93.0	93.6	93.6	0.72	0.81	0.84	87.8

Continued on next page

ODP High Efficiency continued

Valid for lines:

ODP High Efficiency (Close Couple Pump JM/JP)
Fire Pump ODP High Efficiency
ODP High Efficiency General Purpose (900 RPM and motors 250 HP or larger)

Output		Rated Speed (rpm)	Frame	Full Load Torque (ft.lb)	LockedRotor Current		Locked Rotor Tl/Tn	Break-down Torque Tb/Tn	Inertia J (lb-ft2)	Allowable locked rotor time (s)		Weight (lb)	Sound dB(A)	Service Factor	460 V								
															Rated speed (rpm)	% of full load							
																Efficiency			Power Factor			Full load current In (A)
HP	kW				Code	Il/In				Hot	Cold					50	75	100	50	75	100	
100	75	3560	365TS	146	G	6.1	1.9	2.7	7.88	13	29	592	83.0	1.15	3560	93.0	93.0	93.0	0.82	0.84	0.86	118
		1775	404T	292	G	6.0	2.2	2.5	18.3	10	22	882	69.0	1.15	1775	93.6	94.1	94.1	0.74	0.82	0.85	118
		1775	404TS	292	G	6.0	2.2	2.5	18.3	10	22	882	69.0	1.15	1775	93.6	94.1	94.1	0.74	0.82	0.85	118
		1775	404/5T	292	G	6.0	2.2	2.5	18.3	10	22	882	69.0	1.15	1775	93.6	94.1	94.1	0.74	0.82	0.85	118
		1185	444T	437	F	5.6	1.9	2.0	62.7	18	40	1422	77.0	1.15	1185	94.1	94.1	94.1	0.65	0.76	0.80	125
125	90	3560	404TS	182	G	6.3	1.9	2.6	9.37	11	24	890	84.0	1.15	3560	93.0	93.6	93.6	0.81	0.87	0.88	142
		1775	404/5T	365	G	6.2	2.4	2.6	20.8	11	24	1052	69.0	1.15	1775	94.1	94.5	94.5	0.75	0.83	0.85	146
		1775	405T	365	G	6.2	2.4	2.6	20.8	11	24	1052	69.0	1.15	1775	94.1	94.5	94.5	0.75	0.83	0.85	146
		1775	405TS	365	G	6.2	2.4	2.6	20.8	11	24	1052	69.0	1.15	1775	94.1	94.5	94.5	0.75	0.83	0.85	146
		1185	445T	547	G	5.8	2.0	2.0	70.9	20	44	1482	78.0	1.15	1185	94.1	94.1	94.1	0.66	0.76	0.80	155
15	110	3555	405TS	219	G	6.4	2.0	2.5	11.9	10	22	994	84.0	1.15	3555	93.6	93.6	93.6	0.84	0.87	0.88	168
		1785	444T	435	G	6.3	2.4	2.6	3.33	19	42	1235	77.0	1.15	1785	94.5	95.0	95.0	0.75	0.82	0.85	171
		1785	444TS	435	G	6.3	2.4	2.6	3.33	19	42	1235	77.0	1.15	1785	94.5	95.0	95.0	0.75	0.82	0.85	171
		1785	444/5T	435	G	6.3	2.4	2.6	3.33	19	42	1235	77.0	1.15	1785	94.5	95.0	95.0	0.75	0.82	0.85	171
		1185	445T	656	F	5.7	2.0	2.0	81.8	18	40	1704	79.0	1.15	1185	94.5	94.5	94.5	0.66	0.76	0.80	183
200	150	3570	444TS	290	G	6.3	1.9	2.5	26.8	20	44	1503	85.0	1.15	3570	93.0	94.5	94.5	0.80	0.85	0.87	229
		1780	444/5T	582	G	6.3	2.3	2.4	43.8	19	42	1740	78.0	1.15	1780	94.5	95.0	95.0	0.80	0.84	0.86	230
		1780	445T	582	G	6.3	2.3	2.4	43.8	19	42	1740	78.0	1.15	1780	94.5	95.0	95.0	0.80	0.84	0.86	230
		1780	445TS	582	G	6.3	2.3	2.4	43.8	19	42	1740	78.0	1.15	1780	94.5	95.0	95.0	0.80	0.84	0.86	230
		1185	447/9T	874	G	5.8	2.0	2.2	98.2	18	40	2205	79.0	1.15	1185	94.5	95.0	95.0	0.69	0.78	0.82	243
250	185	3570	445TS	363	F	6.4	2.0	2.5	30.2	15	33	1634	85.0	1.15	3570	94.1	94.5	95.0	0.84	0.89	0.90	272
		1780	444/5T	728	G	6.6	2.0	2.3	53.4	15	33	1786	79.0	1.15	1780	95.0	95.4	95.4	0.80	0.86	0.88	273
		1780	445T	728	G	6.6	2.0	2.3	53.4	15	33	1786	79.0	1.15	1780	95.0	95.4	95.4	0.80	0.86	0.88	273
		1780	445TS	728	G	6.6	2.0	2.3	53.4	15	33	1786	79.0	1.15	1780	95.0	95.4	95.4	0.80	0.86	0.88	273
		1185	447/9T	1093	G	6.5	2.2	2.4	115	18	40	2426	79.0	1.15	1185	95.0	95.4	95.4	0.67	0.77	0.81	300
300	220	3565	445TS	436	F	6.3	2.0	2.6	33.5	16	35	1709	85.0	1.15	3565	94.1	95.0	95.0	0.84	0.89	0.90	323
		1780	447/9T	873	G	7.1	2.2	2.3	56.1	10	22	2095	77.0	1.15	1780	95.4	95.4	95.5	0.81	0.87	0.89	325
		1185	447/9T	1312	H	6.7	2.2	2.4	131	18	40	2646	79.0	1.15	1185	95.0	95.4	95.4	0.67	0.77	0.81	357
350	260	3565	447/9TS	509	G	6.5	1.7	2.5	35.7	14	31	1819	85.0	1.15	3565	94.5	95.0	95.0	0.83	0.88	0.89	386
		1780	447/9T	1019	H	7.4	2.4	2.6	66.1	10	22	2315	77.0	1.15	1780	95.4	95.8	95.5	0.81	0.88	0.89	384

Continued on next page

Data subject to change without notice.

Valid for lines:

ODP High Efficiency (Close Couple Pump JM/JP)

Fire Pump ODP High Efficiency

ODP High Efficiency General Purpose (900 RPM and motors 250 HP or larger)

Output		Rated Speed (rpm)	Frame	Full Load Torque (ft.lb)	LockedRotor Current		Locked Rotor Tl/Tn	Break-down Torque Tb/Tn	Inertia J (lb-ft2)	Allowable locked rotor time (s)		Weight (lb)	Sound dB(A)	Service Factor	460 V							
															% of full load						
															Efficiency			Power Factor			Full load current In (A)
HP	kW				Code	Il/In				Hot	Cold				Rated speed (rpm)	50	75	100	50	75	100	
400	300	3565	447/9TS	581	G	6.5	1.7	2.5	39.1	14	31	1896	85.0	1.15	3565	95.0	95.4	95.4	0.83	0.88	0.89	443
		1780	447/9T	1164	H	7.7	2.6	2.7	77.6	9	20	2536	77.0	1.15	1780	95.8	95.8	95.5	0.81	0.87	0.89	443
450	330	3565	447/9TS	654	G	6.8	1.8	2.5	43.6	14	31	2073	85.0	1.15	3565	95.0	95.4	95.8	0.84	0.89	0.90	480
		1787	5010/11T	1305	G	6.8	2.2	2.2	118	18	40	3087	80.0	1.15	1787	95.0	95.4	95.4	0.73	0.82	0.85	511
500	370	3570	447/9TS	726	G	7.1	1.9	2.5	46.9	14	31	2139	85.0	1.15	3570	95.0	95.4	95.8	0.84	0.89	0.90	539
		1787	5010/11T	1450	H	7.0	2.3	2.3	131	17	37	3308	80.0	1.15	1787	95.0	95.4	95.4	0.73	0.82	0.85	573
550	400	3565	447/9TS	799	G	7.2	2.0	2.5	50.3	14	31	2271	85.0	1.15	3565	95.0	95.4	95.8	0.84	0.89	0.90	582
		1787	5010/11T	1595	G	6.8	2.2	2.2	144	16	35	3528	80.0	1.15	1787	95.2	95.8	95.8	0.76	0.84	0.87	602
600	440	3570	447/9TS	871	H	7.9	2.0	2.7	53.6	14	31	2359	85.0	1.15	3570	95.0	95.4	95.8	0.83	0.89	0.90	641
		1787	5010/11T*	1740	G	6.8	2.2	2.2	157	12	26	3749	80.0	1.00	1787	95.4	95.8	95.8	0.76	0.84	0.87	663
650	480	3570	5010/11TS	943	G	6.5	1.8	2.3	73.3	12	26	2977	89.0	1.15	3570	94.5	95.0	95.4	0.78	0.85	0.88	718
700	515	3570	5010/11TS	1016	G	6.8	2.0	2.4	78.5	16	35	3087	89.0	1.15	3570	95.0	95.4	95.4	0.79	0.86	0.88	770
750	550	3580	5010/11TS	1085	H	7.5	2.1	2.6	89.0	12	26	3308	89.0	1.15	3580	95.0	95.8	95.8	0.76	0.83	0.87	828
800	590	3575	5010/11TS	1159	H	7.4	2.0	2.5	89.0	12	26	3528	89.0	1.15	3575	95.4	95.8	95.8	0.78	0.85	0.87	888
850	630	3575	5010/11TS*	1232	H	7.4	2.0	2.5	95.7	10	22	3638	89.0	1.00	3575	95.4	95.8	95.8	0.78	0.85	0.88	938
900	660	3575	5010/11TS*	1304	G	7.2	2.0	2.5	95.7	8	18	3749	89.0	1.00	3575	95.4	95.8	95.8	0.78	0.85	0.88	983

TEFC - Explosion Proof - High Efficiency

Valid for lines:

EXPLOSION PROOF MOTORS

TEFC - Three Phase – Foot Mount - High Efficiency

TEFC - Three Phase – C-Flange - Footless - High Efficiency

Output		Rated Speed (rpm)	Frame	Full Load Torque (ft.lb)	Locked Rotor Current		Locked Rotor Torque Tl/Tn	Break-down Torque Tb/Tn	Inertia J (lb-ft2)	Allowable locked rotor time (s)		Weight (lb)	Sound dB(A)	Service Factor	460 V								
															Rated speed (rpm)	% of full load							
																Efficiency			Power Factor			Full load current In (A)
HP	kW				Code	Il/In				Hot	Cold					50	75	100	50	75	100	
1	0.75	875	182T	5.92	M	6.0	3.0	3.5	0.3991	40	88	112	50.0	1.15	875	68.0	72.0	74.0	0.35	0.45	0.55	2.31
1.5	1.1	860	184T	9.04	J	5.5	2.5	2.6	0.4438	32	70	122	50.0	1.15	860	74.0	75.5	77.0	0.47	0.58	0.66	2.71
2	1.5	870	213T	11.9	L	6.6	2.4	2.9	1.19	43	95	163	52.0	1.15	870	78.5	81.5	82.5	0.47	0.53	0.66	3.46
3	2.2	860	215T	18.1	J	6.2	2.0	2.1	1.79	30	66	200	52.0	1.15	860	82.5	84.0	84.0	0.57	0.69	0.75	4.39
5	3.7	875	254T	29.6	H	5.3	2.0	2.8	2.90	37	81	304	54.0	1.15	875	82.1	85.0	85.5	0.47	0.60	0.68	7.99
7.5	5.5	875	256T	44.4	G	5.2	1.9	2.7	3.41	41	90	329	54.0	1.15	875	83.4	85.9	86.5	0.51	0.63	0.71	11.2
10	7.5	885	284T	58.5	H	6.0	2.5	2.4	7.20	53	117	467	54.0	1.15	885	86.5	88.5	88.5	0.60	0.72	0.78	13.6
15	11	880	286T	88.3	G	6.1	2.4	2.3	8.18	37	81	507	54.0	1.15	880	86.5	88.5	88.5	0.68	0.78	0.82	19.0
20	15	880	324T	118	G	5.3	2.2	2.2	9.79	34	75	604	56.0	1.15	880	87.5	89.5	89.5	0.56	0.68	0.75	28.0
25	18.5	880	326T	147	G	5.1	2.4	2.4	11.9	29	64	673	56.0	1.15	880	87.5	88.5	89.5	0.53	0.65	0.73	35.5
30	22	885	364T	176	G	5.7	2.2	2.2	23.5	48	106	911	62.0	1.15	885	89.5	91.0	91.0	0.66	0.75	0.79	38.4
40	30	885	365T	234	G	5.6	2.2	2.2	29.0	42	92	1047	62.0	1.15	885	89.5	91.0	91.0	0.66	0.75	0.79	52.4
50	37	885	404T	293	G	5.6	2.2	2.1	34.6	27	59	1103	62.0	1.15	885	90.2	91.7	91.7	0.69	0.75	0.78	64.9
60	45	885	405T	351	G	5.8	1.7	2.1	36.9	13	29	1257	62.0	1.15	885	91.0	91.7	91.7	0.70	0.76	0.80	77.0
75	55	890	444T	437	G	6.1	1.7	2.1	73.6	28	62	1911	64.0	1.15	890	91.7	92.4	93.0	0.69	0.78	0.82	90.5
100	75	890	445T	582	G	6.1	1.7	2.0	87.3	29	64	2054	64.0	1.15	890	92.4	93.0	93.0	0.71	0.79	0.82	123
125	90	890	447T	728	G	6.1	1.7	2.0	104	21	46	2342	66.0	1.15	890	93.0	93.6	93.6	0.70	0.79	0.82	152
		890	504T	728	G	6.1	1.7	2.0	104	21	46	2342	66.0	1.15	890	93.0	93.6	93.6	0.70	0.79	0.82	152
150	110	890	447T	873	G	6.0	1.7	2.0	134	23	51	2690	66.0	1.15	890	93.0	93.6	93.6	0.71	0.79	0.83	178
		890	505T	873	G	6.0	1.7	2.0	134	23	51	2690	66.0	1.15	890	93.0	93.6	93.6	0.71	0.79	0.83	178
200	150	890	449T	1164	J	7.0	2.2	2.5	161	16	35	3197	66.0	1.15	890	93.0	94.1	94.5	0.56	0.68	0.75	265
		890	586/7T	1164	G	5.7	1.2	2.1	350	40	88	4181	75.0	1.15	890	94.1	94.5	94.5	0.65	0.74	0.78	255
250	185	3570	447TS	363	G	6.6	2.0	2.5	51.4	34	75	2542	87.0	1.15	3570	93.6	95.4	95.4	0.88	0.90	0.91	267
		3570	505TS	363	G	6.6	2.0	2.5	51.4	34	75	2542	88.0	1.15	3570	93.6	95.4	95.4	0.88	0.90	0.91	267
		1780	447T	728	G	6.5	2.1	2.3	89.6	22	48	2597	82.0	1.15	1780	94.5	95.0	95.4	0.81	0.85	0.86	283
		1780	505T	728	G	6.5	2.1	2.3	89.6	22	48	2597	77.0	1.15	1780	94.5	95.0	95.4	0.81	0.85	0.86	283
		1190	586/7T	1088	G	6.0	1.8	2.1	226	74	163	3916	77.0	1.15	1190	93.0	94.1	95.0	0.68	0.76	0.80	305
		1185	449T	1093	H	6.7	2.5	2.6	153	15	33	2977	70.0	1.15	1185	94.5	95.0	95.0	0.68	0.78	0.82	298
		890	586/7T	1455	G	5.8	1.2	2.1	387	26	57	4333	75.0	1.15	890	94.5	95.0	95.0	0.64	0.75	0.78	313
300	220	3575	449TS	435	J	8.4	2.8	3.4	58.1	15	33	2977	84.0	1.15	3575	94.5	95.4	95.8	0.82	0.88	0.90	320
		3570	586/7TS	435	G	6.6	1.1	2.0	123	34	75	4190	85.0	1.15	3570	94.1	95.0	95.4	0.87	0.88	0.89	325
		1790	586/7T	868	G	6.6	2.0	2.3	163	56	123	3971	83.0	1.15	1790	95.0	95.4	95.4	0.82	0.87	0.88	329
		1785	449T	871	H	7.3	2.9	2.7	105	18	40	2977	80.0	1.15	1785	94.0	95.0	95.4	0.78	0.84	0.87	333

Continued on next page

Data subject to change without notice.

Valid for lines:

EXPLOSION PROOF MOTORS

TEFC - Three Phase – Foot Mount - High Efficiency

TEFC - Three Phase – C-Flange - Footless - High Efficiency

Output		Rated Speed (rpm)	Frame	Full Load Torque (ft.lb)	LockedRotor Current		Locked Rotor Torque Tl/Tn	Break-down Torque Tb/Tn	Inertia J (lb-ft2)	Allowable locked rotor time (s)		Weight (lb)	Sound dB(A)	Service Factor	460 V								
																% of full load						
																Efficiency			Power Factor			
HP	kW				Code	Il/In				Hot	Cold				Rated speed (rpm)	50	75	100	50	75	100	Full load current In (A)
300	220	1190	449T	1306	J	7.6	2.8	2.8	169	14	31	3308	70.0	1.15	1190	94.1	94.5	95.0	0.63	0.75	0.80	364
		1190	586/7T	1306	G	6.1	1.8	2.0	277	70	154	4190	77.0	1.15	1190	93.6	94.5	95.0	0.72	0.80	0.82	355
		890	586/7T	1746	G	5.9	1.0	2.0	462	25	55	4818	75.0	1.15	890	93.6	94.1	95.0	0.67	0.76	0.79	368
350	260	3580	586/7TS	507	G	6.6	1.3	2.2	136	35	77	4420	85.0	1.15	3580	94.1	95.0	95.4	0.87	0.88	0.89	384
		3575	449TS	507	J	8.7	2.8	3.4	68.1	14	31	3197	84.0	1.15	3575	95.0	95.8	95.8	0.82	0.88	0.90	379
		1790	586/7T	1013	G	6.6	1.8	2.1	179	38	84	4079	83.0	1.15	1790	95.0	95.4	95.4	0.80	0.85	0.86	398
		1780	449T	1019	H	7.2	2.6	2.6	118	22	48	3308	80.0	1.15	1780	95.0	95.4	95.4	0.79	0.85	0.87	394
		1190	586/7T	1524	G	6.2	1.8	2.0	328	73	161	4520	77.0	1.15	1190	93.0	94.1	95.4	0.70	0.77	0.80	428
		890	586/7T*	2037	G	5.9	1.1	2.0	484	25	55	4895	75.0	1.15	890	93.6	94.1	95.0	0.60	0.64	0.78	440
400	300	1790	586/7T	1158	G	6.4	1.8	2.0	179	34	75	4248	83.0	1.15	1790	95.0	95.4	95.4	0.79	0.85	0.86	459
		1190	586/7T	1741	G	6.0	2.0	2.0	368	71	156	5005	77.0	1.15	1190	95.0	95.4	95.4	0.70	0.78	0.82	481
450	330	1790	586/7T*	1302	G	6.5	1.8	2.0	213	32	70	4366	83.0	1.15	1790	95.0	95.4	95.4	0.80	0.85	0.86	505
		1190	586/7T*	1959	G	6.0	1.5	2.1	368	34	75	5005	77.0	1.15	1190	93.0	94.1	95.4	0.70	0.78	0.80	543
500	370	1790	586/7T*	1447	G	6.4	1.8	2.1	256	35	77	4840	83.0	1.00	1790	95.0	95.4	95.8	0.82	0.85	0.86	564

TEFC - Explosion Proof - NEMA Premium

Valid for lines:

THREE-PHASE
Foot Mount
C-Flange – Foot Mount
C-Flange – Footless

Output		Rated Speed (rpm)	Frame	Full Load Torque (ft.lb)	LockedRotor Current		Locked Rotor Torque Tl/Tn	Break-down Torque Tb/Tn	Inertia J (lb-ft2)	Allowable locked rotor time (s)		Weight (lb)	Sound dB(A)	Service Factor	460 V							
															Rated speed (rpm)	% of full load						Full load current In (A)
																Efficiency			Power Factor			
HP	kW				Code	Il/In				Hot	Cold					50	75	100	50	75	100	
1	0.75	3495	143T	1.48	M	9.0	3.0	4.0	0.0415	40	88	61.7	68.0	1.15	3495	75.5	80.0	81.5	0.65	0.76	0.82	1.41
		1765	143T	2.94	L	8.6	2.9	4.0	0.0975	18	40	61.7	51.0	1.15	1765	80.0	82.5	85.5	0.57	0.70	0.77	1.43
		875	182T	5.92	M	6.0	3.0	3.5	0.3991	22	48	112	50.0	1.15	875	74.0	77.0	78.5	0.32	0.42	0.52	2.30
1.5	1.1	3500	143T	2.22	M	9.2	3.0	4.0	0.0413	20	44	61.7	68.0	1.15	3500	78.5	82.5	84.0	0.62	0.73	0.80	2.05
		1760	145T	4.42	L	8.9	2.7	3.8	0.1303	14	31	70.6	51.0	1.15	1760	81.5	85.5	86.5	0.58	0.70	0.78	2.05
		1165	182T	6.67	K	7.2	2.6	3.3	0.4212	35	77	118	52.0	1.15	1165	84.5	86.5	87.5	0.47	0.59	0.68	2.32
		860	184T	9.04	J	5.5	2.4	2.6	0.5223	17	37	128	50.0	1.15	860	80.0	81.5	82.5	0.42	0.54	0.62	2.70
2	1.5	3495	145T	2.96	M	9.4	3.5	4.0	0.0551	15	33	66.1	68.0	1.15	3495	80.0	84.0	85.5	0.64	0.76	0.82	2.69
		1750	145T	5.92	K	7.9	2.5	3.2	0.1595	11	24	55.1	51.0	1.15	1750	84.0	85.5	86.5	0.60	0.73	0.80	2.72
		1165	184T	8.89	K	7.0	2.6	3.3	0.5323	35	77	129	52.0	1.15	1165	84.5	86.5	88.5	0.47	0.58	0.68	3.13
		870	213T	11.9	M	7.6	2.7	3.0	1.31	35	77	165	52.0	1.15	870	80.0	82.5	84.0	0.45	0.57	0.65	3.45
3	2.2	3515	182T	4.42	K	8.8	2.5	4.0	0.1471	30	66	90.4	69.0	1.15	3515	82.5	85.5	86.5	0.69	0.79	0.84	3.80
		1760	182T	8.83	K	8.0	2.5	3.2	0.2781	28	62	115	56.0	1.15	1760	87.5	88.5	89.5	0.59	0.71	0.79	3.91
		1170	213T	13.3	J	6.7	2.2	2.5	1.20	58	128	165	55.0	1.15	1170	86.5	88.5	89.5	0.50	0.62	0.70	4.41
		865	215T	18.0	J	6.1	2.6	2.6	1.79	32	70	201	52.0	1.15	865	86.0	87.0	87.0	0.54	0.66	0.74	4.44
5	3.7	3505	184T	7.39	K	9.0	2.8	3.8	0.1889	26	57	106	69.0	1.15	3505	85.5	87.5	88.5	0.70	0.81	0.86	6.10
		1755	184T	14.8	K	8.2	2.7	3.3	0.3695	17	37	130	56.0	1.15	1755	86.5	88.5	89.5	0.59	0.71	0.79	6.57
		1160	215T	22.3	J	6.6	1.9	2.4	1.47	57	125	218	55.0	1.15	1160	88.5	89.5	89.5	0.58	0.70	0.76	6.83
		880	254T	29.4	H	5.3	2.1	2.7	3.41	21	46	313	54.0	1.15	880	84.0	86.5	87.5	0.46	0.58	0.67	7.93
7.5	5.5	3540	213T	11.0	K	9.0	3.0	3.8	0.4696	23	51	190	72.0	1.15	3540	85.5	88.5	89.5	0.71	0.81	0.86	8.97
		1765	213T	22.0	H	7.1	2.4	2.8	1.38	12	26	152	58.0	1.15	1765	88.5	90.2	91.7	0.60	0.73	0.80	9.41
		1175	254T	33.1	J	7.0	2.7	3.2	3.32	25	55	309	59.0	1.15	1175	88.5	90.2	91.0	0.58	0.71	0.78	9.73
		880	256T	44.2	H	5.3	2.1	2.8	4.15	23	51	353	54.0	1.15	880	86.5	87.5	87.5	0.48	0.60	0.68	11.6
10	7.5	3535	215T	14.7	K	9.2	2.8	3.5	0.5512	18	40	201	72.0	1.15	3535	88.5	89.5	90.2	0.71	0.81	0.87	12.0
		1765	215T	29.4	J	7.5	2.5	3.0	1.34	15	33	207	58.0	1.15	1765	90.2	91.0	91.7	0.62	0.75	0.81	12.7
		1175	256T	44.1	J	7.2	2.7	3.1	4.15	26	57	364	59.0	1.15	1175	89.5	90.2	91.0	0.60	0.70	0.78	13.3
		880	284T	58.9	H	6.0	2.5	2.4	7.20	30	66	467	54.0	1.15	880	91.0	91.7	91.0	0.62	0.73	0.78	13.3
15	11	3535	254T	22.0	G	6.5	2.0	2.7	1.19	31	68	318	75.0	1.15	3535	91.0	91.7	91.7	0.79	0.86	0.89	16.9
		1770	254T	43.9	J	7.3	3.0	3.0	2.31	26	57	329	69.0	1.15	1770	90.2	91.7	92.4	0.65	0.75	0.81	18.4
		1180	284T	65.9	H	7.2	2.5	2.6	7.07	25	55	463	59.0	1.15	1180	91.0	91.7	91.7	0.74	0.83	0.86	17.5
		880	286T	88.3	G	6.1	2.4	2.3	8.18	37	81	507	54.0	1.15	880	91.0	91.7	91.0	0.66	0.76	0.80	19.0

Continued on next page

Data subject to change without notice.

Valid for lines:
THREE-PHASE
Foot Mount
C-Flange – Foot Mount
C-Flange – Footless

Output		Rated Speed (rpm)	Frame	Full Load Torque (ft.lb)	LockedRotor Current		Locked Rotor Torque Tl/Tn	Break-down Torque Tb/Tn	Inertia J (lb-ft2)	Allowable locked rotor time (s)		Weight (lb)	Sound dB(A)	Service Factor	460 V							
															Rated speed (rpm)	% of full load						Full load current In (A)
																Efficiency			Power Factor			
HP	kW				Code	II/In				Hot	Cold					50	75	100	50	75	100	
20	15	3530	256T	29.4	G	6.2	2.0	2.5	1.45	26	57	357	75.0	1.15	3530	91.0	91.7	91.7	0.79	0.86	0.89	23.1
		1770	256T	58.5	J	7.5	3.0	3.0	2.89	20	44	364	69.0	1.15	1770	91.7	92.4	93.0	0.63	0.75	0.81	25.0
		1180	286T	87.8	H	7.2	2.5	2.7	8.02	22	48	501	59.0	1.15	1180	91.7	91.7	91.7	0.70	0.80	0.85	24.2
		880	324T	118	G	5.3	2.3	2.3	9.37	25	55	606	56.0	1.15	880	91.7	92.4	92.4	0.56	0.67	0.74	27.5
25	18.5	3555	284TS	36.4	K	9.0	2.2	2.8	2.58	58	128	452	75.0	1.15	3555	91.7	92.4	92.4	0.78	0.85	0.88	28.6
		1775	284T	73.0	J	8.2	3.0	3.0	4.54	20	44	472	68.0	1.15	1775	92.4	93.6	93.6	0.67	0.78	0.83	29.9
		1180	324T	110	G	6.4	2.3	2.6	10.8	25	55	639	62.0	1.15	1180	92.4	93.0	93.0	0.65	0.76	0.82	30.4
		880	326T	147	G	5.1	2.4	2.4	11.9	20	44	673	56.0	1.15	880	91.0	92.4	92.4	0.51	0.63	0.71	35.4
30	22	3545	286TS	43.8	H	7.7	2.6	3.0	3.08	14	31	529	75.0	1.15	3545	92.4	93.0	93.0	0.78	0.86	0.88	33.7
		1770	286T	87.8	J	8.2	3.0	3.0	5.16	17	37	512	68.0	1.15	1770	93.0	93.6	93.6	0.66	0.77	0.82	36.0
		1180	326T	132	H	7.1	2.4	2.7	12.5	25	55	695	62.0	1.15	1180	92.4	93.0	93.0	0.63	0.75	0.81	36.7
		885	364/5T	176	G	5.7	2.2	2.2	23.5	14	31	911	62.0	1.15	885	92.4	93.0	93.0	0.64	0.73	0.77	38.5
40	30	3555	324TS	58.3	G	6.6	2.7	2.7	4.62	43	95	639	81.0	1.15	3555	92.4	93.6	93.6	0.80	0.86	0.88	45.8
		1780	324T	116	J	7.7	2.7	3.0	8.17	19	42	650	71.0	1.15	1780	93.0	94.1	94.1	0.66	0.77	0.83	48.2
		1185	364/5T	175	H	7.0	2.3	2.3	29.0	24	53	1010	65.0	1.15	1185	93.6	94.1	94.1	0.72	0.80	0.85	47.1
		885	364/5T	234	F	5.2	2.2	2.2	29.0	25	55	1058	62.0	1.15	885	93.0	93.6	93.6	0.64	0.73	0.77	52.2
50	37	3550	326TS	73.0	H	7.2	2.1	2.1	5.42	33	73	728	81.0	1.15	3550	92.4	93.6	94.1	0.82	0.88	0.89	55.5
		1780	326T	146	H	7.3	2.6	2.8	9.16	20	44	706	71.0	1.15	1780	93.6	94.5	94.5	0.65	0.76	0.81	60.6
		1185	364/5T	219	H	7.4	2.6	2.8	29.4	20	44	1036	65.0	1.15	1185	93.6	94.1	94.1	0.71	0.81	0.85	58.1
		885	404/5T	293	J	7.3	2.2	2.1	34.6	12	26	1257	62.0	1.15	885	92.4	93.0	93.6	0.67	0.73	0.73	68.0
60	45	3560	364/5TS	87.3	G	6.4	2.0	2.5	9.96	60	132	1017	85.0	1.15	3560	92.4	93.6	94.1	0.79	0.86	0.88	68.3
		1780	364/5T	175	H	7.0	2.5	2.5	20.8	20	44	1014	75.0	1.15	1780	94.1	94.5	95.0	0.72	0.82	0.87	68.3
		1180	404/5T	263	H	6.9	2.5	2.7	36.9	29	64	1213	65.0	1.15	1180	93.6	94.5	94.5	0.73	0.82	0.85	70.4
		885	404/5T	351	G	6.2	1.8	2.2	38.3	25	55	1279	62.0	1.15	885	92.4	93.0	93.0	0.65	0.75	0.80	75.9
75	55	3560	364/5TS	109	G	7.0	2.3	2.6	9.96	18	40	1025	85.0	1.15	3560	93.0	94.1	94.1	0.81	0.87	0.89	82.4
		1780	364/5T	218	G	7.0	2.7	3.0	23.3	16	35	937	75.0	1.15	1780	94.5	95.0	95.4	0.74	0.83	0.87	83.2
		1180	404/5T	329	J	7.7	2.5	2.6	40.2	15	33	1257	65.0	1.15	1180	94.1	95.0	94.5	0.72	0.81	0.84	87.0
		890	444/5T	437	G	6.1	1.7	2.1	73.6	18	40	1912	64.0	1.15	890	93.6	94.1	93.6	0.66	0.76	0.80	92.2
100	75	3550	404/5TS	146	F	6.3	2.0	2.6	13.2	21	46	1206	85.0	1.15	3550	93.6	95.0	95.0	0.85	0.89	0.90	110
		1780	404/5T	291	H	7.2	2.7	3.0	26.4	13	29	1222	75.0	1.15	1780	94.5	95.0	95.4	0.72	0.82	0.87	113
		1190	444/5T	435	H	6.8	2.3	2.6	87.3	49	108	1896	70.0	1.15	1190	94.1	95.0	95.0	0.66	0.76	0.82	121
		890	444/5T	582	G	6.1	1.7	2.0	87.3	16	35	2053	64.0	1.15	890	94.1	94.5	94.1	0.68	0.77	0.80	125

Continued on next page

TEFC - Explosion Proof - NEMA Premium continued

Valid for lines:

THREE-PHASE
Foot Mount
C-Flange – Foot Mount
C-Flange – Footless

Output		Rated Speed (rpm)	Frame	Full Load Torque (ft.lb)	LockedRotor Current		Locked Rotor Torque Tl/Tn	Break-down Torque Tb/Tn	Inertia J (lb-ft2)	Allowable locked rotor time (s)		Weight (lb)	Sound dB(A)	Service Factor	460 V							
															% of full load						Full load current In (A)
															Efficiency			Power Factor			
HP	kW				Code	Il/In				Hot	Cold				Rated speed (rpm)	50	75	100	50	75	100	
125	90	3560	444/5TS	182	G	6.6	2.0	2.5	31.2	22	48	1940	86.0	1.15	3560	93.0	94.5	95.0	0.83	0.89	0.90	137
		1785	444/5T	363	G	6.4	2.0	2.2	57.2	18	40	2026	76.0	1.15	1785	95.0	95.4	95.4	0.76	0.83	0.86	142
		1185	444/5T	547	H	7.4	2.3	2.4	104	41	90	2293	70.0	1.15	1185	94.5	95.0	95.0	0.67	0.76	0.82	150
		890	447T	728	G	6.1	1.7	2.0	104	18	40	2337	66.0	1.15	890	94.5	95.0	94.5	0.66	0.76	0.80	154
		890	504/5T	728	G	6.1	1.7	2.0	104	18	40	2337	66.0	1.15	890	94.5	95.0	94.5	0.66	0.76	0.80	154
150	110	3570	444/5TS	218	G	7.0	2.0	2.5	39.1	31	68	1985	86.0	1.15	3570	93.6	95.0	95.4	0.85	0.89	0.90	161
		1780	444/5T	437	G	6.3	2.2	2.5	66.7	22	48	2095	76.0	1.15	1780	95.0	95.8	95.8	0.72	0.81	0.85	170
		1185	447T	656	H	7.5	2.6	2.6	134	42	92	2540	73.0	1.15	1185	95.0	95.8	95.8	0.68	0.78	0.83	174
		1185	504/5T	656	H	7.5	2.6	2.6	134	42	92	2540	73.0	1.15	1185	95.0	95.8	95.8	0.68	0.78	0.83	174
		890	447T	873	G	6.0	1.7	2.0	125	18	40	2646	66.0	1.15	890	94.5	95.0	94.5	0.68	0.77	0.82	179
		890	504/5T	873	G	6.0	1.7	2.0	125	18	40	2646	66.0	1.15	890	94.5	95.0	94.5	0.68	0.77	0.82	179
200	150	3570	447TS	290	H	7.3	2.2	2.6	44.7	37	81	2492	87.0	1.15	3570	94.1	95.4	95.8	0.84	0.88	0.89	221
		3570	504/5TS	290	H	7.3	2.2	2.6	44.7	37	81	2492	88.0	1.15	3570	94.1	95.4	95.8	0.84	0.88	0.89	221
		1780	447T	582	H	7.0	2.3	2.4	76.2	25	55	2426	82.0	1.15	1780	95.8	96.2	96.2	0.70	0.80	0.85	230
		1780	504/5T	582	H	7.0	2.3	2.4	76.2	25	55	2426	82.0	1.15	1780	95.8	96.2	96.2	0.70	0.80	0.85	230
		1190	447T	871	J	7.8	2.7	2.8	134	14	31	2615	73.0	1.15	1190	94.5	95.4	95.8	0.60	0.73	0.79	249
		1190	504/5T	871	J	7.8	2.7	2.8	134	14	31	2615	73.0	1.15	1190	94.5	95.4	95.8	0.60	0.73	0.79	249
		890	449T	1164	K	7.5	2.8	3.0	161	13	29	3581	66.0	1.15	890	92.4	94.5	95.0	0.52	0.63	0.70	283
		890	586/7T	1164	G	5.7	1.2	2.1	350	65	143	4167	75.0	1.15	890	94.1	94.5	95.0	0.60	0.71	0.76	261
250	185	3570	447TS	363	H	8.0	2.4	2.8	50.3	18	40	2492	87.0	1.15	3570	95.0	95.4	95.8	0.83	0.89	0.90	269
		3570	504/5TS	363	H	8.0	2.4	2.8	50.3	18	40	2492	88.0	1.15	3570	95.0	95.4	95.8	0.83	0.89	0.90	269
		1780	447T	728	H	7.0	2.1	2.3	89.6	30	66	2646	82.0	1.15	1780	95.4	96.2	96.2	0.72	0.81	0.85	284
		1780	504/5T	728	H	7.0	2.1	2.3	89.6	30	66	2646	77.0	1.15	1780	95.4	96.2	96.2	0.72	0.81	0.85	284
		1190	449T	1088	J	8.1	2.8	3.0	145	10	22	3188	70.0	1.15	1190	95.0	95.4	95.8	0.64	0.76	0.81	299
		1190	586/7T	1088	G	6.0	1.8	2.1	226	33	73	3859	77.0	1.15	1190	93.6	95.4	95.8	0.67	0.75	0.80	303
		890	586/7T	1455	G	5.8	1.0	2.1	395	26	57	4410	75.0	1.15	890	94.1	94.5	95.4	0.60	0.71	0.77	316
300	220	3575	449TS	435	J	8.4	2.8	3.4	58.1	15	33	3308	84.0	1.15	3575	94.5	95.4	95.8	0.82	0.88	0.90	320
		3580	586/7TS	434	G	6.6	1.3	2.2	123	34	75	4410	85.0	1.15	3580	94.5	95.4	95.8	0.86	0.87	0.88	328
		1785	449T	871	H	8.0	2.8	2.9	89.6	14	31	3087	80.0	1.15	1785	95.4	95.8	96.2	0.74	0.83	0.86	334
		1790	586/7T	868	G	6.8	1.8	2.1	161	50	110	4079	83.0	1.15	1790	95.0	95.8	96.2	0.78	0.84	0.85	338
		1190	449T	1306	J	7.9	2.8	3.0	145	7	15	3197	70.0	1.15	1190	95.0	95.4	95.8	0.66	0.77	0.82	351
		1190	586/7T	1306	G	6.1	1.8	2.1	277	35	77	4190	77.0	1.15	1190	93.6	95.4	95.8	0.68	0.75	0.82	351
		895	586/7T	1737	G	6.2	1.4	2.1	462	24	53	4818	75.0	1.15	895	95.0	95.0	95.4	0.60	0.72	0.77	376

Continued on next page

Data subject to change without notice.

Valid for lines:

THREE-PHASE
Foot Mount
C-Flange – Foot Mount
C-Flange – Footless

Output		Rated Speed (rpm)	Frame	Full Load Torque (ft.lb)	LockedRotor Current		Locked Rotor Torque Tl/Tn	Break-down Torque Tb/Tn	Inertia J (lb-ft2)	Allowable locked rotor time (s)		Weight (lb)	Sound dB(A)	Service Factor	460 V							
															Rated speed (rpm)	% of full load						Full load current In (A)
																Efficiency			Power Factor			
HP	kW				Code	Il/In				Hot	Cold					50	75	100	50	75	100	
350	260	3575	449TS	507	J	8.7	2.8	3.4	68.1	14	31	3638	84.0	1.15	3575	95.0	95.8	95.8	0.82	0.88	0.90	379
		3580	586/7TS	507	G	6.6	1.3	2.2	136	35	77	4410	85.0	1.15	3580	94.5	95.4	95.8	0.86	0.87	0.88	388
		1780	449T	1019	H	7.8	2.8	2.9	118	14	31	3418	80.0	1.15	1780	95.4	95.8	96.2	0.76	0.84	0.87	390
		1790	586/7T	1013	H	7.3	2.3	2.3	179	32	70	4234	83.0	1.15	1790	95.0	95.8	96.2	0.77	0.84	0.86	395
		1190	586/7T	1524	G	6.2	1.8	2.0	328	30	66	4520	77.0	1.15	1190	93.6	95.0	95.8	0.69	0.76	0.80	426
		890	586/7T*	2037	G	5.9	1.1	2.0	484	25	55	4895	75.0	1.00	890	94.1	94.5	95.4	0.60	0.64	0.78	439
400	300	1790	586/7T	1158	G	6.4	1.8	2.0	179	18	40	4366	83.0	1.15	1790	95.4	96.2	96.2	0.80	0.84	0.85	460
		1190	586/7T	1741	G	6.0	2.0	2.0	368	71	156	4983	77.0	1.15	1190	93.6	95.0	95.8	0.70	0.78	0.82	479
450	330	1790	586/7T*	1302	G	6.5	1.8	2.0	213	24	53	4586	83.0	1.15	1790	95.8	96.2	96.2	0.81	0.85	0.86	501
		1190	586/7T*	1959	G	6.0	1.5	2.1	368	34	75	5005	77.0	1.00	1190	93.6	95.0	95.8	0.69	0.77	0.80	540
500	370	1790	586/7T*	1447	G	6.4	1.8	2.1	256	25	55	4829	83.0	1.00	1790	95.8	96.2	96.2	0.81	0.84	0.85	568

W22 TEFC - Crusher Duty - High Efficiency

Valid for lines:

CRUSHER DUTY - THREE PHASE

TEFC - Foot Mount - High Efficiency

Output		Rated Speed (rpm)	Frame	Full Load Torque (ft.lb)	LockedRotor Current		Locked Rotor Torque Tl/Tn	Break-down Torque Tb/Tn	Inertia J (lb-ft2)	Allowable locked rotor time (s)		Weight (lb)	Sound dB(A)	Service Factor	460 V							
															% of full load						
															Rated speed (rpm)	Efficiency			Power Factor			Full load current In (A)
HP	kW				Code	Il/In				Hot	Cold					50	75	100	50	75	100	
50	37	880	404/5T	294	G	6.2	1.7	2.4	34.6	12	26	992	60.0	1.15	880	91.7	91.7	91.7	0.70	0.79	0.83	61.0
60	45	880	404/5T	353	G	6.3	1.8	2.5	36.9	11	24	1047	60.0	1.15	880	91.7	92.4	91.7	0.70	0.80	0.83	74.2
75	55	885	444/5T	439	F	5.6	1.7	2.0	73.6	20	44	1444	63.0	1.15	885	93.0	93.0	93.0	0.67	0.76	0.80	92.8
100	75	1775	404/5T	292	F	6.1	2.1	2.4	27.4	14	31	1094	70.0	1.15	1775	94.5	94.5	94.5	0.82	0.87	0.89	112
		1185	444/5T	437	G	6.0	2.0	2.2	73.6	16	35	1422	69.0	1.15	1185	94.1	94.1	94.1	0.70	0.80	0.83	121
		885	444/5T	585	G	5.7	1.8	2.0	87.3	18	40	1599	63.0	1.15	885	93.0	93.6	93.0	0.67	0.76	0.80	127
125	90	1780	444/5T	364	F	6.1	1.8	2.4	45.7	24	53	1444	73.0	1.15	1780	94.5	94.5	94.5	0.77	0.84	0.86	139
		1185	444/5T	547	F	6.0	2.0	2.2	87.3	19	42	1599	69.0	1.15	1185	94.1	94.5	94.1	0.72	0.80	0.84	143
		890	504/5	728	F	5.8	1.8	2.0	104	23	51	2110	66.0	1.15	890	93.6	94.1	93.6	0.67	0.76	0.80	151
		885	445/7T	732	F	5.8	1.8	2.0	104	15	33	1806	63.0	1.15	885	93.6	94.1	93.6	0.67	0.76	0.80	151
150	110	1780	444/5T	437	F	6.3	1.9	2.4	57.2	23	51	1552	73.0	1.15	1780	95.0	95.0	95.0	0.78	0.84	0.87	167
		1190	504/5	653	G	6.2	2.0	2.2	109	22	48	2097	70.0	1.15	1190	94.1	95.0	95.0	0.71	0.80	0.83	175
		1185	445/7T	656	G	6.1	2.0	2.2	109	19	42	1810	69.0	1.15	1185	94.5	95.0	95.0	0.73	0.80	0.84	173
		890	504/5	873	F	5.8	1.8	2.0	134	21	46	2293	66.0	1.15	890	94.1	94.5	94.1	0.68	0.77	0.81	181
		885	445/7T	878	F	5.7	1.7	2.0	134	15	33	1965	63.0	1.15	885	94.1	94.1	93.6	0.67	0.76	0.80	184
200	150	1785	504/5	580	G	6.2	2.0	2.1	76.2	21	46	2145	75.0	1.15	1785	94.5	95.0	95.0	0.77	0.84	0.86	230
		1780	445/7T	582	G	6.4	2.0	2.3	76.2	18	40	1828	73.0	1.15	1780	95.0	95.4	95.0	0.77	0.84	0.86	230
		1190	504/5Z	871	G	6.0	2.0	2.1	134	19	42	2368	70.0	1.15	1190	95.0	95.0	95.0	0.73	0.81	0.84	236
		1190	504/5	871	G	6.0	2.0	2.1	134	19	42	2368	70.0	1.15	1190	95.0	95.0	95.0	0.73	0.81	0.84	236
		1185	445/7T	874	G	6.1	2.1	2.2	134	15	33	2093	69.0	1.15	1185	94.5	95.0	95.0	0.72	0.81	0.84	236
		895	586/7	1158	G	6.0	1.3	2.1	350	40	88	3334	75.0	1.15	895	95.0	95.0	94.5	0.65	0.76	0.80	249
		890	447/9T	1164	J	7.0	2.0	2.4	161	15	33	3409	66.0	1.15	890	94.0	94.5	94.5	0.59	0.70	0.76	262
		890	447/9TZ	1164	J	7.0	2.0	2.4	161	15	33	3409	66.0	1.15	890	94.0	94.5	94.5	0.59	0.70	0.76	262
250	185	1790	504/5	724	H	7.7	2.8	2.9	89.6	12	26	2227	75.0	1.15	1790	95.0	95.8	95.8	0.72	0.81	0.85	285
		1790	504/5Z	724	H	7.7	2.8	2.9	89.6	12	26	2227	75.0	1.15	1790	95.0	95.8	95.8	0.72	0.81	0.85	285
		1785	445/7T	726	J	8.0	2.8	2.9	89.6	15	33	2227	73.0	1.15	1785	95.0	95.4	95.8	0.73	0.82	0.85	285
		1785	445/7TZ	726	J	8.0	2.8	2.9	89.6	15	33	2227	73.0	1.15	1785	95.0	95.4	95.8	0.73	0.82	0.85	285
		1190	447/9T	1088	H	7.3	2.5	2.8	153	15	33	2977	70.0	1.15	1190	95.0	95.4	95.4	0.64	0.75	0.81	300
		1190	447/9TZ	1088	H	7.3	2.5	2.8	153	15	33	2977	70.0	1.15	1190	95.0	95.4	95.4	0.64	0.75	0.81	300
		1190	586/7	1088	G	6.0	1.9	2.2	226	12	26	3263	77.0	1.15	1190	94.5	95.4	95.4	0.66	0.76	0.80	304
		1190	586/7Z	1088	G	6.0	1.9	2.2	226	12	26	3263	77.0	1.15	1190	94.5	95.4	95.4	0.66	0.76	0.80	304
		895	586/7	1447	H	6.5	1.4	2.3	387	15	33	3726	75.0	1.15	895	94.5	95.0	95.4	0.63	0.74	0.79	308
300	220	1790	586/7	868	H	7.3	2.1	2.6	138	12	26	2975	81.0	1.15	1790	94.1	95.4	95.8	0.75	0.83	0.86	335
		1790	586/7Z	868	H	7.3	2.1	2.6	138	12	26	2975	81.0	1.15	1790	94.1	95.4	95.8	0.75	0.83	0.86	335
		1785	447/9T	871	G	7.0	2.5	2.8	105	15	33	2807	80.0	1.15	1785	95.4	95.8	95.8	0.75	0.83	0.86	335
		1785	447/9TZ	871	G	7.0	2.5	2.8	105	15	33	2807	80.0	1.15	1785	95.4	95.8	95.8	0.75	0.83	0.86	335
		1190	447/9T	1306	J	7.8	2.7	3.0	169	15	33	3197	70.0	1.15	1190	95.0	95.4	95.4	0.63	0.75	0.80	362
		1190	447/9TZ	1306	J	7.8	2.7	3.0	169	15	33	3197	70.0	1.15	1190	95.0	95.4	95.4	0.63	0.75	0.80	362
		1190	586/7	1306	H	6.6	2.2	2.5	260	12	26	3506	77.0	1.15	1190	94.5	95.4	95.4	0.65	0.75	0.80	362
		1190	586/7Z	1306	H	6.6	2.2	2.5	260	12	26	3506	77.0	1.15	1190	94.5	95.4	95.4	0.65	0.75	0.80	362

Continued on next page

Data subject to change without notice.

Valid for lines:

CRUSHER DUTY - THREE PHASE

TEFC - Foot Mount - High Efficiency

Output		Rated Speed (rpm)	Frame	Full Load Torque (ft.lb)	LockedRotor Current		Locked Rotor Torque Tl/Tn	Break-down Torque Tb/Tn	Inertia J (lb-ft2)	Allowable locked rotor time (s)		Weight (lb)	Sound dB(A)	Service Factor	460 V								
															Rated speed (rpm)	% of full load						Full load current In (A)
																Efficiency			Power Factor			
HP	kW				Code	II/In				Hot	Cold					50	75	100	50	75	100	
300	220	895	586/7	1737	H	6.6	1.5	2.5	462	15	33	3896	75.0	1.15	895	94.5	95.0	95.4	0.65	0.75	0.79	366
350	260	1790	586/7	1013	H	7.3	2.2	2.6	163	0	0	3363	81.0	1.15	1790	95.0	95.8	95.8	0.74	0.82	0.85	401
		1790	586/7Z	1013	H	7.3	2.2	2.6	163	0	0	3363	81.0	1.15	1790	95.0	95.8	95.8	0.74	0.82	0.85	401
		1785	447/9T	1016	H	7.5	2.7	3.0	118	15	33	3175	80.0	1.15	1785	95.0	95.8	95.8	0.73	0.82	0.86	396
		1785	447/9TZ	1016	H	7.5	2.7	3.0	118	15	33	3175	80.0	1.15	1785	95.0	95.8	95.8	0.73	0.82	0.86	396
		1195	586/7	1517	H	6.5	2.2	2.4	328	12	26	3958	77.0	1.15	1195	95.0	95.4	95.4	0.66	0.76	0.80	428
		1195	586/7Z	1517	H	6.5	2.2	2.4	328	12	26	3958	77.0	1.15	1195	95.0	95.4	95.4	0.66	0.76	0.80	428
		895	586/7	2026	H	6.7	1.6	2.3	484	34	75	4309	75.0	1.15	895	95.0	95.4	95.0	0.64	0.75	0.80	429
400	300	1790	586/7	1158	H	7.2	2.1	2.4	193	12	26	3771	81.0	1.15	1790	95.4	95.8	95.8	0.77	0.84	0.87	452
		1790	586/7Z	1158	H	7.2	2.1	2.4	193	12	26	3771	81.0	1.15	1790	95.4	95.8	95.8	0.77	0.84	0.87	452
		1190	586/7	1741	G	6.0	1.9	2.0	351	12	26	4101	77.0	1.15	1190	95.0	95.4	95.4	0.68	0.77	0.81	485
		1190	586/7Z	1741	G	6.0	1.9	2.0	351	12	26	4101	77.0	1.15	1190	95.0	95.4	95.4	0.68	0.77	0.81	485
450	330	1790	586/7	1302	H	7.7	2.4	2.6	214	12	26	3991	81.0	1.15	1790	95.4	95.8	95.8	0.77	0.84	0.87	497
		1790	586/7Z	1302	H	7.7	2.4	2.6	214	12	26	3991	81.0	1.15	1790	95.4	95.8	95.8	0.77	0.84	0.87	497
		1195	586/7	1951	G	6.4	2.3	2.4	368	12	26	4223	77.0	1.15	1195	95.0	95.4	95.4	0.65	0.75	0.80	540
		1195	586/7Z	1951	G	6.4	2.3	2.4	368	12	26	4223	77.0	1.15	1195	95.0	95.4	95.4	0.65	0.75	0.80	540
500	370	1790	586/7	1447	G	7.0	2.2	2.4	236	12	26	4190	81.0	1.15	1790	95.0	95.8	95.8	0.78	0.85	0.87	557
		1790	586/7Z	1447	G	7.0	2.2	2.4	236	12	26	4190	81.0	1.15	1790	95.0	95.8	95.8	0.78	0.85	0.87	557
		1190	586/7*	2177	F	5.5	1.9	2.0	368	12	26	4223	77.0	1.15	1190	95.0	95.4	95.8	0.69	0.78	0.81	598
		1190	586/7Z*	2177	F	5.5	1.9	2.0	368	12	26	4223	77.0	1.15	1190	95.0	95.4	95.8	0.69	0.78	0.81	598

IEC TRU-METRIC™ - THREE PHASE (IE2)

Valid for lines:

GENERAL PURPOSE

TEFC - Foot Mount - IE2

Output		Rated Speed (rpm)	Frame	Full Load Torque (ft.lb)	Locked Rotor Current Il/In	Locked Rotor Torque Tl/Tn	Break-down Torque Tb/Tn	Inertia J (lb-ft²)	Allowable locked rotor time (s)		Weight (lb)	Sound dB(A)	415 V							
													Rated speed (rpm)	% of full load						Full load current In (A)
														Efficiency			Power Factor			
kW	HP								Hot	Cold				50	75	100	50	75	100	
0.12	0.16	2790	63	0.300	4.8	2.7	2.5	0.0028	37	81	12.6	52.0	2790	53.0	60.0	61.0	0.53	0.66	0.75	0.379
		1380	63	0.610	3.9	0.0	0.0	0.0093	51	112	12.6	44.0	1380	55.0	58.0	59.0	0.54	0.67	0.77	0.381
		905	63	0.930	3.0	0.0	0.0	0.0145	52	114	15.9	43.0	905	42.0	50.0	52.0	0.43	0.53	0.63	0.529
		650	71	1.31	2.3	1.9	2.0	0.0197	172	378	20.9	41.0	650	40.0	48.0	50.0	0.35	0.43	0.52	0.666
0.18	0.25	2770	63	0.470	4.6	2.5	2.5	0.0033	28	62	13.7	52.0	2770	56.0	62.0	63.0	0.54	0.68	0.78	0.529
		1380	63	0.950	4.3	0.0	0.0	0.0131	40	88	15.9	44.0	1380	59.0	61.0	61.0	0.55	0.68	0.77	0.553
		890	71	1.48	3.2	0.0	0.0	0.0195	96	211	20.9	43.0	890	52.0	58.0	59.0	0.40	0.51	0.61	0.722
		670	80	1.96	3.1	1.9	2.1	0.0562	48	106	25.4	42.0	670	47.0	53.0	55.0	0.44	0.55	0.65	0.727
0.25	0.33	2760	63	0.630	4.7	2.9	2.5	0.0038	24	53	14.8	52.0	2760	58.0	64.0	65.0	0.53	0.67	0.78	0.712
		1420	80	1.21	5.5	1.8	2.3	0.0363	31	68	19.8	44.0	1420	70.0	74.0	74.0	0.61	0.74	0.81	0.602
		1360	71	1.28	4.0	0.0	0.0	0.0131	68	150	15.4	43.0	1360	63.0	66.0	66.0	0.54	0.67	0.76	0.719
		910	80	1.91	3.9	0.0	0.0	0.0522	27	59	23.2	43.0	910	63.0	67.0	67.0	0.51	0.66	0.76	0.709
		900	71	1.93	3.2	0.0	0.0	0.0221	70	154	25.4	43.0	900	53.0	60.0	61.0	0.37	0.48	0.58	1.02
		670	80	2.59	3.2	1.9	2.1	0.0681	42	92	29.8	42.0	670	49.0	55.0	57.0	0.43	0.55	0.66	0.959
0.37	0.5	2800	71	0.930	5.6	2.4	2.5	0.0078	21	46	14.3	56.0	2800	68.0	71.0	71.0	0.66	0.79	0.86	0.875
		2730	63	0.960	4.5	2.8	2.5	0.0047	20	44	15.9	52.0	2730	64.0	67.0	68.0	0.57	0.72	0.82	0.958
		1420	80	1.84	5.7	2.0	2.4	0.0444	23	51	20.9	44.0	1420	73.0	75.5	75.5	0.60	0.73	0.81	0.873
		1365	71	1.93	4.2	2.2	2.2	0.0157	48	106	17.6	43.0	1365	65.0	68.0	68.0	0.50	0.64	0.73	1.08
		910	80	2.89	3.9	0.0	0.0	0.0522	27	59	23.2	43.0	910	63.0	67.0	67.0	0.51	0.66	0.76	1.05
		690	90S	3.81	3.5	1.8	1.8	0.1042	37	81	39.7	43.0	690	56.0	62.0	62.0	0.41	0.52	0.62	1.39
0.55	0.75	2780	71	1.41	5.3	2.4	2.4	0.0095	15	33	18.7	56.0	2780	70.0	72.0	72.0	0.70	0.82	0.88	1.25
		1410	80	2.78	5.8	2.2	2.5	0.0524	18	40	23.2	44.0	1410	75.0	76.5	76.5	0.61	0.74	0.82	1.27
		1340	71	2.94	4.1	2.2	2.0	0.0195	27	59	20.9	43.0	1340	68.0	70.5	70.5	0.50	0.64	0.74	1.52
		910	80	4.32	4.1	0.0	0.0	0.0721	21	46	30.9	43.0	910	65.0	71.0	71.0	0.50	0.65	0.75	1.49
		685	90L	5.76	3.5	1.9	2.0	0.1431	31	68	48.5	43.0	685	61.0	64.0	64.0	0.44	0.56	0.66	1.88
0.75	1	2850	90S	1.83	6.5	2.4	2.5	0.0278	25	55	34.2	62.0	2850	77.0	79.0	79.0	0.61	0.73	0.80	1.71
		2795	80	1.87	6.0	2.7	2.7	0.0154	22	48	27.6	59.0	2795	76.0	79.0	79.5	0.73	0.82	0.86	1.58
		2770	71	1.88	5.8	2.6	2.6	0.0119	12	26	19.8	56.0	2770	77.0	77.5	77.6	0.67	0.80	0.87	1.60
		1425	90S	3.66	5.9	1.9	2.3	0.0911	19	42	38.6	49.0	1425	78.0	80.0	80.0	0.59	0.72	0.80	1.69
		1410	80	3.70	6.0	2.3	2.5	0.0686	15	33	29.8	44.0	1410	79.0	79.6	79.8	0.63	0.76	0.83	1.63
		925	90S	5.66	4.5	0.0	0.0	0.1303	23	51	41.9	45.0	925	74.5	76.0	76.0	0.51	0.64	0.73	1.95
		710	100L	7.35	4.6	1.7	2.1	0.2613	42	92	62.8	50.0	710	71.0	74.0	74.0	0.40	0.52	0.62	2.36

Continued on next page

Data subject to change without notice.

Valid for lines:

GENERAL PURPOSE

TEFC - Foot Mount - IE2

Output		Rated Speed (rpm)	Frame	Full Load Torque (ft.lb)	Locked Rotor Current Il/In	Locked Rotor Torque Tl/Tn	Break-down Torque Tb/Tn	Inertia J (lb-ft²)	Allowable locked rotor time (s)		Weight (lb)	Sound dB(A)	415 V							
														% of full load						
														Efficiency			Power Factor			Full load current In (A)
kW	HP								Hot	Cold			Rated speed (rpm)	50	75	100	50	75	100	
1.1	1.5	2835	90S	2.77	6.1	2.2	2.3	0.0332	16	35	36.4	62.0	2835	80.0	80.5	80.5	0.65	0.77	0.83	2.38
		2790	80	2.81	6.3	2.8	2.7	0.0195	18	40	30.9	59.0	2790	79.5	80.5	80.5	0.67	0.79	0.85	2.32
		1440	90S	5.43	6.5	1.9	2.3	0.1172	14	31	41.9	49.0	1440	81.0	81.8	81.8	0.62	0.75	0.81	2.40
		1440	90L	5.43	6.5	1.9	2.3	0.1172	14	31	41.9	49.0	1440	81.0	81.8	81.8	0.62	0.75	0.81	2.40
		1400	L80	5.57	6.6	2.4	2.6	0.0890	10	22	34.2	44.0	1400	80.5	81.4	81.4	0.66	0.79	0.84	2.32
		925	90L	8.49	4.7	2.0	1.9	0.1561	17	37	50.7	45.0	925	76.0	78.1	78.1	0.50	0.63	0.73	2.78
		705	100L	11.1	4.6	1.8	1.9	0.3004	29	64	67.3	50.0	705	71.0	75.0	75.0	0.40	0.53	0.62	3.41
1.5	2	2825	90S	3.70	5.9	2.3	2.2	0.0384	12	26	38.6	62.0	2825	81.5	82.0	82.0	0.66	0.78	0.84	3.14
		2825	90L	3.70	5.9	2.3	2.2	0.0384	12	26	38.6	62.0	2825	81.5	82.0	82.0	0.66	0.78	0.84	3.14
		2770	80	3.77	6.5	2.9	2.8	0.0221	14	31	33.1	59.0	2770	80.0	81.0	81.5	0.65	0.78	0.85	3.13
		1440	90L	7.25	6.3	1.8	2.5	0.1296	10	22	48.5	49.0	1440	81.5	83.0	83.0	0.57	0.72	0.80	3.26
		1425	100L	7.32	6.6	2.5	2.7	0.1597	20	44	61.7	53.0	1425	82.5	83.2	83.2	0.62	0.74	0.81	3.21
		945	112M	11.1	5.2	1.8	2.0	0.3700	28	62	80.5	48.0	945	80.5	81.0	80.5	0.51	0.64	0.72	3.74
		940	100L	11.1	5.0	1.7	2.1	0.2603	23	51	62.8	44.0	940	79.5	80.0	80.0	0.51	0.64	0.73	3.71
		700	112M	14.9	4.7	2.1	2.0	0.4786	29	64	86.0	46.0	700	77.0	79.0	79.0	0.44	0.57	0.67	4.09
2.2	3	2885	100L	5.42	7.5	2.3	2.7	0.1016	15	33	58.4	67.0	2885	82.5	83.6	83.6	0.66	0.78	0.85	4.47
		2840	90L*	5.51	6.6	2.6	2.7	0.0524	9	20	46.3	64.0	2840	83.0	83.6	83.6	0.63	0.76	0.83	4.58
		1445	112M	10.8	6.3	1.6	2.3	0.2781	23	51	86.0	56.0	1445	84.5	85.0	85.0	0.63	0.75	0.81	4.61
		1430	L90L	11.0	7.4	2.2	2.7	0.0000	9	20	52.9	49.0	1430	83.8	84.3	84.3	0.60	0.74	0.82	4.59
		1425	100L	11.0	6.6	2.6	2.8	0.1951	16	35	67.3	53.0	1425	84.0	84.5	84.5	0.63	0.75	0.81	4.64
		940	112M	16.7	5.0	1.8	2.0	0.4352	19	42	83.8	48.0	940	81.0	82.5	82.0	0.53	0.66	0.73	5.30
		700	132S	22.4	5.5	1.9	2.1	1.40	25	55	137	48.0	700	81.0	81.5	81.0	0.52	0.65	0.72	5.44
3	4	2880	100L	7.23	7.7	2.5	2.7	0.1205	12	26	62.8	67.0	2880	84.0	85.0	85.0	0.68	0.80	0.86	5.92
		2840	L90L	7.32	7.1	3.2	3.2	0.0717	8	18	55.1	62.0	2840	84.0	84.6	84.6	0.61	0.75	0.82	6.24
		1420	100L	14.7	6.5	2.8	2.9	0.2307	14	31	72.8	53.0	1420	85.0	85.6	85.6	0.64	0.76	0.82	6.17
		960	132S	21.7	5.7	1.6	2.1	0.8510	31	68	135	52.0	960	82.5	83.6	83.6	0.50	0.63	0.71	7.30
		960	132M	21.7	5.7	1.6	2.1	0.8510	31	68	135	52.0	960	82.5	83.6	83.6	0.50	0.63	0.71	7.30
		700	132M	30.0	5.5	1.9	2.1	1.76	19	42	146	48.0	700	82.0	82.5	82.0	0.54	0.66	0.73	7.23
4	5.5	2870	112M	9.98	6.5	2.0	2.6	0.1559	16	35	83.8	64.0	2870	86.0	86.0	86.0	0.70	0.81	0.87	7.72
		2870	100L	9.96	7.8	2.7	3.2	0.1523	9	20	70.6	67.0	2870	85.2	85.8	85.8	0.67	0.80	0.86	7.82
		1455	132M	19.7	7.2	1.7	2.7	0.8082	14	31	132	60.0	1455	87.0	87.2	87.2	0.68	0.80	0.85	7.75
		1455	132S	19.7	7.2	1.7	2.7	0.8082	14	31	132	60.0	1455	87.0	87.2	87.2	0.68	0.80	0.85	7.75
		1440	112M	19.9	6.6	1.7	2.3	0.3697	11	24	92.6	56.0	1440	86.0	86.7	86.7	0.64	0.76	0.82	8.12
		960	132M	29.8	6.0	1.8	2.2	1.07	21	46	150	52.0	960	84.0	84.8	84.8	0.51	0.64	0.72	9.46
		725	160M	39.6	4.7	1.8	2.0	2.00	9	20	236	51.0	725	84.0	85.0	85.0	0.52	0.65	0.72	9.43

Continued on next page

IEC TRU-METRIC™ - THREE PHASE (IE2) continued

Valid for lines:

GENERAL PURPOSE

TEFC - Foot Mount - IE2

Output		Rated Speed (rpm)	Frame	Full Load Torque (ft.lb)	Locked Rotor Current Il/In	Locked Rotor Torque Tl/Tn	Break-down Torque Tb/Tn	Inertia J (lb-ft²)	Allowable locked rotor time (s)		Weight (lb)	Sound dB(A)	415 V							
													Rated speed (rpm)	% of full load						Full load current In (A)
														Efficiency			Power Factor			
kW	HP								Hot	Cold				50	75	100	50	75	100	
5.5	7.5	2910	132S	13.4	6.8	1.9	2.7	0.3842	17	37	132	67.0	2910	86.5	88.0	88.0	0.68	0.79	0.85	10.6
		2910	132M	13.4	6.8	1.9	2.7	0.3842	17	37	132	67.0	2910	86.5	88.0	88.0	0.68	0.79	0.85	10.6
		2880	112M*	13.6	7.3	2.4	2.7	0.2079	11	24	92.6	64.0	2880	86.5	87.0	87.0	0.72	0.82	0.87	10.5
		1460	132S	26.7	7.3	1.7	2.7	0.9879	10	22	139	56.0	1460	88.0	88.1	88.1	0.69	0.81	0.86	10.5
		1460	132M	26.7	7.3	1.7	2.7	0.9879	10	22	139	56.0	1460	88.0	88.1	88.1	0.69	0.81	0.86	10.5
		1440	L112M	27.0	7.1	2.3	2.8	0.0000	11	24	101	56.0	1440	87.0	87.7	87.7	0.57	0.70	0.78	11.6
		970	160M	40.3	6.0	1.9	2.3	2.00	19	42	234	56.0	970	87.5	88.0	87.5	0.63	0.75	0.81	11.2
		960	132M	40.7	6.4	1.9	2.3	1.43	19	42	159	52.0	960	85.5	86.1	86.1	0.51	0.64	0.72	12.8
		725	160M	54.0	4.7	1.8	2.0	2.73	21	46	265	51.0	725	85.0	86.0	85.5	0.52	0.65	0.73	12.7
7.5	10	2910	132S	17.9	6.8	1.9	2.6	0.4696	13	29	139	67.0	2910	88.0	88.5	88.5	0.72	0.82	0.87	14.1
		2910	132M	17.9	6.8	1.9	2.6	0.4696	13	29	139	67.0	2910	88.0	88.5	88.5	0.72	0.82	0.87	14.1
		2870	L112M	18.1	7.9	2.7	3.1	0.2598	9	20	99.2	64.0	2870	87.3	88.1	88.1	0.67	0.79	0.85	14.5
		1465	160M	35.5	6.1	1.9	2.4	1.27	15	33	205	61.0	1465	88.0	89.2	89.0	0.65	0.77	0.83	14.7
		1455	132M	35.7	7.2	1.7	2.6	1.25	8	18	159	56.0	1455	88.7	89.0	89.0	0.71	0.81	0.86	14.1
		1455	132S	35.7	7.2	1.7	2.6	1.25	8	18	159	56.0	1455	88.7	89.0	89.0	0.71	0.81	0.86	14.1
		970	160M	53.7	5.8	1.8	2.3	2.33	17	37	249	56.0	970	88.3	88.7	88.3	0.64	0.76	0.82	15.0
		725	160L	72.0	4.9	1.9	2.1	3.41	22	48	306	51.0	725	86.0	87.0	87.0	0.52	0.65	0.73	17.0
9.2	12.5	2915	132M	22.3	7.6	2.2	2.8	0.5550	10	22	154	67.0	2915	88.5	89.0	89.0	0.70	0.81	0.86	17.3
		1465	160M	44.4	6.0	1.8	2.3	1.43	13	29	212	61.0	1465	88.5	89.5	89.3	0.66	0.77	0.83	17.9
		1455	132M*	44.7	7.7	2.0	2.8	1.43	7	15	165	56.0	1455	89.2	89.5	89.5	0.70	0.81	0.86	17.3
		970	160L	67.1	6.0	1.9	2.3	2.83	14	31	280	56.0	970	88.5	88.9	88.6	0.64	0.76	0.82	18.3
		725	180M	89.9	6.0	1.7	2.2	4.82	11	24	344	51.0	725	88.0	88.0	87.5	0.63	0.75	0.82	18.5
11	15	2935	160M	26.5	7.0	2.0	2.7	0.7999	13	29	229	67.0	2935	90.0	90.6	90.5	0.71	0.82	0.86	20.4
		2935	160L	26.5	7.0	2.0	2.7	0.7999	13	29	229	67.0	2935	90.0	90.6	90.5	0.71	0.82	0.86	20.4
		2905	132M*	26.8	6.5	2.1	2.6	0.6407	11	24	163	68.0	2905	89.3	89.6	89.6	0.75	0.84	0.88	20.1
		1470	160M	53.1	6.0	2.0	2.5	1.73	10	22	232	61.0	1470	89.0	90.2	90.2	0.65	0.76	0.83	21.2
		1470	160L	53.1	6.0	2.0	2.5	1.73	10	22	232	61.0	1470	89.0	90.2	90.2	0.65	0.76	0.83	21.2
		1450	132M/L	53.8	7.7	2.1	2.9	1.61	7	15	181	56.0	1450	89.0	89.5	89.8	0.65	0.77	0.84	21.0
		970	160L	80.5	6.0	2.0	2.4	3.16	13	29	300	56.0	970	89.0	89.5	89.2	0.62	0.74	0.81	22.0
		725	180L	108	6.0	1.8	2.1	5.79	11	24	386	51.0	725	88.0	88.5	88.0	0.67	0.77	0.83	21.7

Continued on next page

Data subject to change without notice.

Valid for lines:

GENERAL PURPOSE

TEFC - Foot Mount - IE2

Output		Rated Speed (rpm)	Frame	Full Load Torque (ft.lb)	Locked Rotor Current Il/In	Locked Rotor Torque Tl/Tn	Break-down Torque Tb/Tn	Inertia J (lb-ft²)	Allowable locked rotor time (s)		Weight (lb)	Sound dB(A)	415 V							
													Rated speed (rpm)	% of full load						Full load current In (A)
														Efficiency			Power Factor			
kW	HP								Hot	Cold				50	75	100	50	75	100	
15	20	2930	160M	35.2	7.0	2.1	2.7	0.9281	9	20	247	67.0	2930	91.0	91.3	91.3	0.71	0.81	0.86	27.6
		2930	160L	35.2	7.0	2.1	2.7	0.9281	9	20	247	67.0	2930	91.0	91.3	91.3	0.71	0.81	0.86	27.6
		1465	180M	71.0	6.6	2.1	2.6	3.33	14	31	335	61.0	1465	90.8	91.5	91.3	0.66	0.77	0.83	28.6
		1465	160L	71.0	6.2	2.0	2.5	2.07	10	22	276	61.0	1465	90.6	91.0	91.0	0.66	0.76	0.83	28.7
		970	180L	107	7.0	2.1	2.7	6.09	7	15	384	56.0	970	90.3	90.5	90.3	0.70	0.81	0.86	27.9
		970	180M	107	7.0	2.1	2.7	6.09	7	15	384	56.0	970	90.3	90.5	90.3	0.70	0.81	0.86	27.9
		730	200L	143	4.9	1.7	1.8	10.0	30	66	498	53.0	730	90.0	90.5	90.0	0.58	0.70	0.76	31.7
18.5	25	2940	160L	44.2	7.4	2.1	2.8	1.12	8	18	273	67.0	2940	91.3	92.0	92.0	0.70	0.80	0.86	33.7
		2940	180M	44.1	7.0	1.9	2.6	2.06	10	22	344	67.0	2940	91.4	92.0	91.8	0.75	0.84	0.88	33.1
		1465	180M	88.7	6.6	2.1	2.5	3.93	14	31	362	61.0	1465	91.5	91.8	91.6	0.68	0.78	0.83	35.1
		1465	180L	88.7	6.6	2.1	2.5	3.93	14	31	362	61.0	1465	91.5	91.8	91.6	0.68	0.78	0.83	35.1
		1465	160L	88.7	6.7	2.3	2.5	2.65	8	18	309	61.0	1465	90.5	91.0	91.2	0.66	0.78	0.83	35.3
		975	200L	134	5.7	1.9	2.2	8.34	15	33	472	60.0	975	91.0	91.4	91.2	0.67	0.77	0.82	35.7
		735	225S/M	177	6.3	1.7	2.1	19.8	17	37	747	56.0	735	91.5	91.9	91.7	0.65	0.77	0.82	35.5
22	30	2945	180M	52.9	7.3	2.0	2.7	2.31	9	20	362	67.0	2945	92.0	92.4	92.2	0.76	0.84	0.88	39.1
		2945	180L	52.9	7.3	2.0	2.7	2.31	9	20	362	67.0	2945	92.0	92.4	92.2	0.76	0.84	0.88	39.1
		2935	160L	53.1	7.9	2.3	2.9	1.46	9	20	309	67.0	2935	91.2	91.6	91.6	0.75	0.84	0.89	39.0
		1465	180L	106	6.8	2.3	2.6	4.76	15	33	410	61.0	1465	92.2	92.5	92.3	0.70	0.80	0.85	40.5
		1465	180M	106	6.8	2.3	2.6	4.76	15	33	410	61.0	1465	92.2	92.5	92.3	0.70	0.80	0.85	40.5
		975	200L	160	6.0	2.0	2.4	9.58	14	31	496	60.0	975	91.4	91.7	91.5	0.65	0.76	0.82	42.3
		735	225S/M	213	6.1	1.7	2.1	23.0	16	35	789	56.0	735	91.7	92.0	92.0	0.67	0.78	0.81	42.6
30	40	2955	200L	70.3	6.5	2.1	2.4	4.04	17	37	498	72.0	2955	92.5	93.0	92.9	0.75	0.83	0.87	53.6
		2940	180L	70.6	8.2	2.0	2.7	3.08	7	15	428	67.0	2940	91.5	92.0	92.0	0.78	0.86	0.89	52.9
		1470	200L	141	6.3	2.0	2.3	6.95	16	35	490	65.0	1470	92.6	93.0	92.8	0.68	0.78	0.83	56.2
		1465	180L*	142	6.5	2.2	2.4	5.69	13	29	441	61.0	1465	91.6	92.0	92.3	0.68	0.78	0.83	56.5
		985	225S/M	211	6.8	1.8	2.2	23.0	12	26	792	63.0	985	92.6	92.7	92.6	0.71	0.81	0.86	54.4
		735	250S/M	284	6.6	1.8	2.4	25.2	13	29	955	56.0	735	92.0	92.4	92.3	0.68	0.79	0.83	56.5
37	50	2950	200L	88.0	6.8	2.2	2.3	5.32	16	35	562	72.0	2950	93.0	93.4	93.3	0.76	0.84	0.87	65.8
		1475	225S/M	176	6.6	1.9	2.4	14.5	12	26	754	66.0	1475	93.0	93.2	93.2	0.74	0.83	0.86	66.6
		1470	200L	177	6.0	1.9	2.2	7.88	14	31	523	65.0	1470	92.8	93.0	93.0	0.70	0.80	0.83	69.2
		985	250S/M	264	6.7	1.9	2.2	26.2	16	35	966	64.0	985	93.0	93.2	93.0	0.73	0.82	0.86	66.8
		985	225S/M	264	6.8	1.8	2.2	28.4	11	24	860	63.0	985	93.0	93.2	93.0	0.72	0.81	0.86	66.8
		740	280S/M	352	5.6	1.6	1.8	53.5	26	57	1354	59.0	740	93.0	93.5	93.5	0.64	0.74	0.80	71.4
		730	250S/M	355	7.5	1.8	2.4	39.4	12	26	1257	56.0	730	92.5	93.0	93.0	0.66	0.77	0.82	70.0

Continued on next page

IEC TRU-METRIC™ - THREE PHASE (IE2) continued

Valid for lines:

GENERAL PURPOSE

TEFC - Foot Mount - IE2

Output		Rated Speed (rpm)	Frame	Full Load Torque (ft.lb)	Locked Rotor Current Il/In	Locked Rotor Torque Tl/Tn	Break-down Torque Tb/Tn	Inertia J (lb-ft²)	Allowable locked rotor time (s)		Weight (lb)	Sound dB(A)	415 V							
													Rated speed (rpm)	% of full load						Full load current In (A)
														Efficiency			Power Factor			
kW	HP								Hot	Cold				50	75	100	50	75	100	
45	60	2960	225S/M	105	7.0	2.0	2.5	7.71	12	26	785	75.0	2960	93.3	93.6	93.6	0.79	0.86	0.89	78.0
		2955	200L	105	6.6	1.9	2.2	6.02	14	31	600	72.0	2955	92.5	92.9	92.9	0.76	0.84	0.87	80.4
		1475	225S/M	211	6.8	2.1	2.4	17.0	10	22	800	66.0	1475	93.2	93.7	93.6	0.74	0.83	0.86	80.7
		1470	200L*	211	6.5	2.0	2.3	7.88	9	20	606	65.0	1470	92.7	93.0	93.1	0.65	0.76	0.82	85.1
		985	280S/M	317	6.2	1.8	2.2	48.0	26	57	1314	65.0	985	93.4	93.6	93.4	0.68	0.78	0.82	84.8
		985	250S/M	317	6.4	1.8	2.0	30.6	15	33	1028	64.0	985	93.4	93.5	93.4	0.76	0.84	0.87	79.9
		740	280S/M	423	6.5	1.8	2.2	64.3	32	70	1455	59.0	740	93.4	93.8	93.8	0.64	0.74	0.80	86.6
55	75	2960	250S/M	131	7.0	2.0	2.5	7.66	14	31	911	75.0	2960	93.6	93.9	93.9	0.79	0.86	0.89	95.0
		2960	225S/M	131	7.0	1.8	2.4	10.1	10	22	869	75.0	2960	92.8	93.2	93.2	0.81	0.87	0.90	94.6
		1475	250S/M	264	6.4	2.0	2.4	19.2	14	31	979	66.0	1475	93.6	93.9	94.0	0.75	0.84	0.87	97.1
		1475	225S/M	264	6.9	2.1	2.4	22.6	13	29	926	66.0	1475	92.8	93.2	93.5	0.74	0.83	0.86	98.7
		985	280S/M	397	6.2	1.8	2.1	56.0	22	48	1387	65.0	985	93.6	93.9	93.8	0.68	0.79	0.83	102
		740	315S/M	525	5.8	1.6	1.9	58.8	32	70	1876	62.0	740	93.7	94.2	94.2	0.66	0.76	0.80	105
		740	280S/M	525	5.8	1.7	1.9	75.0	24	53	1566	59.0	740	93.7	94.2	94.1	0.64	0.75	0.80	105
75	100	2975	280S/M	174	7.0	1.8	2.5	20.3	28	62	1389	77.0	2975	93.4	94.3	94.3	0.79	0.86	0.89	129
		2965	250S/M	175	8.2	2.2	2.7	9.67	10	22	992	75.0	2965	94.0	94.3	94.3	0.79	0.86	0.90	128
		1485	280S/M	350	7.2	1.8	2.4	39.0	22	48	1409	69.0	1485	93.8	94.4	94.4	0.74	0.83	0.86	133
		1475	250S/M	352	7.2	2.2	2.6	24.8	10	22	1094	66.0	1475	94.0	94.3	94.4	0.74	0.84	0.88	130
		990	315S/M	523	6.2	1.7	2.0	55.8	23	51	1846	67.0	990	94.0	94.3	94.2	0.69	0.79	0.83	138
		990	280S/M	526	6.4	1.8	2.1	72.0	17	37	1548	65.0	990	93.9	94.3	94.2	0.69	0.79	0.84	137
		740	315S/M	700	5.9	1.6	1.9	77.5	30	66	2097	62.0	740	94.1	94.5	94.6	0.68	0.77	0.81	141
90	125	2975	280S/M	218	7.0	1.8	2.5	22.3	25	55	1440	77.0	2975	94.0	94.6	94.6	0.79	0.86	0.89	154
		1485	280S/M	438	7.2	1.9	2.4	44.6	20	44	1484	69.0	1485	94.1	94.7	94.7	0.76	0.84	0.87	158
		990	315S/M	654	6.0	1.7	1.9	66.2	22	48	1969	67.0	990	94.4	94.6	94.5	0.72	0.80	0.84	164
		740	315S/M	875	6.0	1.7	1.9	90.8	26	57	2249	62.0	740	94.4	94.7	94.7	0.68	0.77	0.81	169
110	150	2980	315S/M	261	7.3	1.8	2.6	23.0	24	53	1927	77.0	2980	94.3	94.9	94.9	0.79	0.86	0.89	188
		2975	280S/M	262	7.6	2.1	2.7	26.4	21	46	1548	77.0	2975	94.5	94.9	94.9	0.78	0.86	0.89	188
		1490	315S/M	522	6.6	1.8	2.2	42.4	26	57	1956	71.0	1490	94.3	95.0	95.0	0.74	0.83	0.86	194
		1485	280S/M	525	7.6	2.1	2.6	53.8	18	40	1621	69.0	1485	94.3	95.0	95.0	0.75	0.83	0.87	192
		990	315S/M	785	6.1	1.8	2.0	79.4	20	44	2130	67.0	990	94.5	94.9	94.8	0.72	0.80	0.84	199
		745	355M/L	1050	6.4	1.3	2.0	247	41	90	3041	70.0	745	94.6	95.2	95.2	0.63	0.74	0.79	211
		740	315L	1050	6.0	1.6	1.9	298	28	62	2743	68.0	740	94.6	94.8	94.8	0.67	0.76	0.80	209
		740	315S/M	1050	6.0	1.6	1.9	114	28	62	2867	62.0	740	94.6	94.8	94.8	0.67	0.76	0.80	209

Continued on next page

Data subject to change without notice.

Valid for lines:

GENERAL PURPOSE

TEFC - Foot Mount - IE2

Output		Rated Speed (rpm)	Frame	Full Load Torque (ft.lb)	Locked Rotor Current Il/In	Locked Rotor Torque Tl/Tn	Break-down Torque Tb/Tn	Inertia J (lb-ft²)	Allowable locked rotor time (s)		Weight (lb)	Sound dB(A)	415 V							
													Rated speed (rpm)	% of full load						Full load current In (A)
														Efficiency			Power Factor			
kW	HP								Hot	Cold				50	75	100	50	75	100	
132	175	2980	315S/M	305	7.3	1.8	2.6	26.9	21	46	2053	77.0	2980	94.5	95.1	95.1	0.80	0.87	0.90	223
		2980	315S/M	313	7.3	1.8	2.6	26.9	21	46	2053	77.0	2980	94.5	95.1	95.1	0.80	0.87	0.90	223
		2975	280S/M	305	7.3	1.7	2.5	31.8	17	37	1674	77.0	2975	94.5	94.8	94.8	0.80	0.87	0.89	226
		1490	315S/M	611	6.6	1.9	2.2	51.5	22	48	2101	71.0	1490	94.6	95.2	95.2	0.76	0.84	0.87	230
		1490	315S/M	628	6.6	1.9	2.2	51.5	22	48	2101	71.0	1490	94.6	95.2	95.2	0.76	0.84	0.87	230
		1480	280S/M*	613	6.9	2.1	2.4	63.0	15	33	1731	69.0	1480	94.3	94.9	94.8	0.73	0.82	0.85	236
		990	315S/M	916	6.4	2.0	2.1	92.6	17	37	2284	67.0	990	94.6	95.0	95.0	0.71	0.80	0.84	239
		745	355M/L	1225	6.5	1.4	2.0	298	47	103	3248	70.0	745	95.0	95.5	95.4	0.64	0.75	0.80	250
		740	315L	1225	6.3	1.7	2.0	313	20	44	2981	68.0	740	94.8	95.1	95.1	0.64	0.75	0.80	250
150	200	1490	315S/M	695	6.2	2.0	2.2	55.2	30	66	2168	71.0	1490	95.0	95.4	95.4	0.77	0.84	0.87	261
		995	355M/L	1041	5.6	1.8	2.0	176	38	84	2955	73.0	995	93.8	94.4	95.0	0.61	0.71	0.76	291
160	220	2980	315S/M	383	7.5	2.0	2.6	30.9	23	51	2194	77.0	2980	94.8	95.3	95.3	0.80	0.87	0.90	269
		1490	315S/M	768	6.6	2.0	2.2	58.9	20	44	2231	71.0	1490	94.8	95.4	95.4	0.77	0.84	0.87	278
		990	355M/L	1151	6.0	1.7	1.9	198	76	167	3204	73.0	990	94.9	95.3	95.3	0.65	0.75	0.80	303
		990	315L	1151	6.6	2.0	2.1	226	14	31	2708	68.0	990	94.8	95.2	95.2	0.70	0.80	0.84	289
		745	355M/L	1530	6.0	1.3	2.1	342	54	119	3563	70.0	745	95.2	95.6	95.6	0.63	0.74	0.80	302
185	250	2980	315S/M	435	7.6	2.0	2.8	33.8	16	35	2276	77.0	2980	94.9	95.5	95.4	0.80	0.86	0.89	314
		1490	315S/M	872	6.8	2.1	2.2	65.9	18	40	2456	71.0	1490	94.9	95.6	95.6	0.75	0.83	0.86	325
		990	355M/L	1308	6.0	1.7	1.9	219	76	167	3354	73.0	990	95.1	95.4	95.4	0.65	0.75	0.80	350
		990	315L	1308	6.9	2.0	2.1	243	12	26	2994	68.0	990	95.0	95.4	95.4	0.69	0.79	0.83	337
		745	355M/L	1739	6.1	1.3	2.1	392	48	106	3729	70.0	745	95.2	95.6	95.6	0.62	0.72	0.78	358
200	270	2985	355M/L	469	7.2	1.6	2.4	94.6	70	154	3279	80.0	2985	94.8	95.5	95.5	0.83	0.88	0.90	336
		2980	315L	470	7.5	2.1	2.5	36.9	21	46	2591	78.0	2980	95.0	95.5	95.4	0.82	0.88	0.90	336
		2980	315S/M	470	7.5	2.1	2.5	51.4	21	46	2591	77.0	2980	95.0	95.5	95.4	0.82	0.88	0.90	336
		1490	315L	942	6.7	2.1	2.2	93.4	17	37	2681	74.0	1490	95.0	95.6	95.6	0.77	0.84	0.87	347
		1490	355M/L	939	6.3	1.7	1.8	141	18	40	3096	76.0	1490	95.1	95.6	95.6	0.74	0.81	0.85	355
		1490	315S/M	942	6.7	2.1	2.2	73.2	17	37	2681	71.0	1490	95.0	95.6	95.6	0.77	0.84	0.87	347
		990	355M/L	1413	6.1	2.0	2.1	258	85	187	3623	73.0	990	95.1	95.5	95.5	0.64	0.75	0.80	378
		990	315L	1413	7.0	2.1	2.2	294	12	26	3281	68.0	990	95.1	95.4	95.4	0.69	0.79	0.83	365
		745	355M/L	1878	6.3	1.4	2.1	436	48	106	3892	70.0	745	95.3	95.6	95.6	0.63	0.74	0.80	377

IEC TRU-METRIC™ - THREE PHASE (IE2) continued

Valid for lines:

GENERAL PURPOSE

TEFC - Foot Mount - IE2

Output		Rated Speed (rpm)	Frame	Full Load Torque (ft.lb)	Locked Rotor Current Il/In	Locked Rotor Torque Tl/Tn	Break-down Torque Tb/Tn	Inertia J (lb-ft²)	Allowable locked rotor time (s)		Weight (lb)	Sound dB(A)	415 V							
													Rated speed (rpm)	% of full load						Full load current In (A)
														Efficiency			Power Factor			
kW	HP								Hot	Cold				50	75	100	50	75	100	
220	300	2985	355M/L	521	8.5	2.0	2.8	105	65	143	3440	80.0	2985	95.1	95.6	95.5	0.86	0.89	0.90	369
		2980	315L	522	7.8	2.2	2.5	123	84	185	2708	78.0	2980	95.0	95.5	95.5	0.81	0.87	0.90	369
		1490	315L	1043	7.0	2.3	2.1	163	14	31	2939	74.0	1490	95.2	95.7	95.7	0.76	0.84	0.87	381
		1490	355M/L	1043	6.4	1.8	2.0	154	18	40	3177	76.0	1490	95.3	95.7	95.7	0.73	0.81	0.85	390
		990	315L	1578	6.8	2.0	2.0	328	14	31	3574	68.0	990	95.2	95.5	95.5	0.69	0.79	0.83	401
		990	355M/L	1570	6.5	1.8	2.1	280	72	158	3958	73.0	990	95.3	95.5	95.5	0.65	0.75	0.80	416
		745	355M/L	2086	6.3	1.3	2.1	462	48	106	4134	70.0	745	95.4	95.7	95.7	0.63	0.74	0.79	420
250	340	2985	355M/L	591	7.8	1.5	2.3	115	65	143	3603	80.0	2985	95.2	95.6	95.6	0.86	0.89	0.91	415
		2980	315L	591	7.8	2.2	2.5	136	17	37	2902	78.0	2980	95.1	95.6	95.5	0.84	0.89	0.91	415
		1490	315L	1182	7.0	2.3	2.2	193	13	29	3085	74.0	1490	95.3	95.7	95.7	0.77	0.85	0.88	428
		1490	355M/L	1182	6.8	1.8	2.1	171	18	40	3241	76.0	1490	95.4	95.8	95.8	0.73	0.82	0.85	443
		990	355M/L	1779	6.0	1.8	2.0	302	34	75	3945	73.0	990	95.3	95.5	95.5	0.66	0.76	0.81	466
		745	355A/B*	2364	6.2	1.3	2.1	514	47	103	4613	70.0	745	95.1	95.7	95.8	0.62	0.73	0.79	477
260	350	2985	355M/L	607	7.9	2.2	2.8	115	20	44	2955	80.0	2985	95.4	96.3	96.4	0.86	0.91	0.92	392
		1490	355M/L	1217	6.8	1.8	2.1	183	18	40	3241	76.0	1490	95.4	95.8	95.8	0.73	0.82	0.85	461
		990	355M/L	1832	6.0	1.8	2.0	302	34	75	3945	73.0	990	95.3	95.5	95.5	0.66	0.76	0.81	485
		745	355A/B*	2434	6.2	1.3	2.1	514	47	103	4613	70.0	745	95.1	95.7	95.8	0.62	0.73	0.79	496
280	380	2980	315L	662	7.9	2.1	2.5	136	12	26	3180	78.0	2980	95.2	95.6	95.6	0.85	0.89	0.91	465
		2980	355M/L	662	7.9	2.1	2.5	120	12	26	3680	80.0	2980	95.2	95.6	95.6	0.86	0.89	0.91	465
		1490	315L	1321	7.2	2.3	2.2	214	12	26	3299	74.0	1490	95.4	95.8	95.8	0.76	0.84	0.87	485
		1490	355M/L	1321	6.6	1.9	2.2	191	14	31	3330	76.0	1490	95.5	95.8	95.8	0.74	0.82	0.85	496
		990	355M/L	1989	6.2	1.9	2.0	329	27	59	4154	73.0	990	95.4	95.6	95.6	0.64	0.75	0.80	528
		745	355A/B*	2643	6.4	1.4	2.1	594	44	97	5025	70.0	745	95.1	95.7	95.8	0.61	0.73	0.79	534
300	400	2985	355M/L	695	8.0	2.3	2.3	133	23	51	3918	80.0	2985	95.2	95.6	95.6	0.87	0.91	0.92	492
		2980	315L*	697	7.5	2.3	2.3	0.0000	18	40	3180	86.0	2980	95.2	95.6	95.6	0.84	0.88	0.90	503
		1490	315L*	1391	7.6	2.2	2.2	236	11	24	3396	78.0	1490	95.4	95.8	95.8	0.72	0.80	0.85	532
		1490	355M/L	1391	7.2	2.1	2.2	204	18	40	3330	76.0	1490	95.5	95.8	95.8	0.74	0.82	0.85	532
		990	355M/L	2093	6.2	2.0	2.0	340	30	66	4190	73.0	990	95.4	95.7	95.6	0.63	0.74	0.79	573
315	430	2985	355M/L	748	7.8	1.9	2.3	133	23	51	3918	80.0	2985	95.2	95.6	95.6	0.87	0.91	0.92	517
		2980	315L*	748	7.9	1.9	2.3	95.3	11	24	3180	86.0	2980	95.2	95.6	95.6	0.84	0.88	0.90	528
		1490	315L*	1495	7.6	2.2	2.2	236	11	24	3396	78.0	1490	95.4	95.8	95.8	0.72	0.80	0.85	558
		1490	355M/L	1495	7.2	2.1	2.1	212	14	31	3623	76.0	1490	95.5	95.8	95.8	0.74	0.82	0.86	552

Continued on next page

Data subject to change without notice.

Valid for lines:

GENERAL PURPOSE

TEFC - Foot Mount - IE2

Output		Rated Speed (rpm)	Frame	Full Load Torque (ft.lb)	Locked Rotor Current Il/In	Locked Rotor Torque Tl/Tn	Break-down Torque Tb/Tn	Inertia J (lb-ft²)	Allowable locked rotor time (s)		Weight (lb)	Sound dB(A)	415 V							
														% of full load						
														Efficiency			Power Factor			
kW	HP								Hot	Cold			Rated speed (rpm)	50	75	100	50	75	100	Full load current In (A)
315	430	995	355M/L	2239	6.2	1.9	2.0	356	28	62	4364	73.0	995	95.4	95.7	95.6	0.66	0.76	0.81	587
330	450	2985	355M/L	781	7.0	2.4	2.4	142	20	44	4053	80.0	2985	95.3	95.6	95.7	0.87	0.89	0.89	539
330	450	1490	355M/L	1570	6.8	2.0	2.3	234	17	37	3901	76.0	1490	95.5	95.8	95.8	0.75	0.83	0.86	578
355	480	2985	355M/L	835	7.9	2.0	2.5	142	14	31	4053	80.0	2985	95.3	95.6	95.6	0.87	0.90	0.91	589
355	480	1490	355M/L	1669	6.9	2.2	2.1	255	15	33	3863	76.0	1490	95.5	95.9	95.8	0.75	0.83	0.86	622
355	480	990	355A/B*	2512	6.2	1.8	2.1	406	29	64	4851	73.0	990	95.3	95.7	95.8	0.63	0.74	0.79	677
370	500	2985	355A/B	869	7.9	2.3	2.6	160	40	88	4511	83.0	2985	95.8	96.1	96.4	0.85	0.89	0.90	616
370	500	1490	355M/L*	1739	7.0	2.1	2.2	276	15	33	4346	76.0	1490	95.5	95.9	95.8	0.75	0.83	0.86	648
370	500	995	355A/B*	2617	6.0	2.2	2.3	0.0000	25	55	5072	73.0	995	95.2	95.7	95.9	0.61	0.72	0.77	697
400	550	2985	355A/B*	955	7.6	2.2	2.5	160	31	68	4505	83.0	2985	95.8	96.2	96.4	0.85	0.89	0.91	658
400	550	1490	355A/B	1912	7.4	2.4	2.6	314	20	44	4606	76.0	1490	95.7	96.1	96.2	0.68	0.79	0.84	714
400	550	1490	355M/L*	1912	7.3	2.4	2.2	276	11	24	4163	76.0	1490	95.5	95.9	95.8	0.74	0.82	0.86	701
400	550	990	355A/B*	2878	6.1	1.8	2.1	449	29	64	5173	73.0	990	95.4	95.8	95.9	0.63	0.74	0.79	762
450	610	2985	355A/B*	1059	7.5	2.2	2.4	176	31	68	4763	83.0	2985	95.8	96.2	96.6	0.85	0.90	0.91	739
450	610	1490	355A/B*	2121	7.4	2.2	2.5	314	20	44	4606	76.0	1490	95.8	96.1	96.2	0.69	0.80	0.84	804
500	680	1490	355A/B*	2364	7.3	2.2	2.4	347	17	37	4952	76.0	1490	95.9	96.3	96.3	0.72	0.81	0.85	882

IEC TRU-METRIC™ - THREE PHASE - Aluminum Frame

Valid for lines:

IEC TRU-METRIC™ - THREE PHASE
TEFC - Foot Mount - IE3 - Aluminum Frames

Output		Rated Speed (rpm)	Frame	Full Load Torque (Nm)	Locked Rotor Current Il/In	Locked Rotor Torque Tl/Tn	Break-down Torque Tb/Tn	Inertia J (lb-ft²)	Allowable locked rotor time (s)		Weight (lb)	Sound dB(A)	460 V							
														% of full load						
														Efficiency			Power Factor			
kW	HP								Hot	Cold			Rated speed (rpm)	50	75	100	50	75	100	Full load current In (A)
0.12	0.16	3430	63	0.242	6.4	4.5	4.6	0.0033	37	81	11.0	52	3430	55.0	62.0	64.0	0.54	0.65	0.73	0.322
		1710	63	0.485	5.2	2.6	3	0.0104	53	117	11.0	44	1710	57.5	59.5	64.0	0.50	0.62	0.71	0.331
		1120	63	0.740	3.5	2.1	2.5	0.0157	56	123	14.3	43	1120	46.0	52.5	57.5	0.40	0.50	0.59	0.444
		825	71	1.00	2.5	1.8	2.4	0.0223	223	491	22.1	41	825	46.0	52.5	55.0	0.30	0.37	0.46	0.595
0.18	0.25	3415	63	0.379	6.3	4.4	4.4	0.0038	28	62	12.1	52	3415	57.5	64.0	68.0	0.54	0.66	0.74	0.449
		1705	63	0.760	5.7	3	3.3	0.0145	40	88	13.2	44	1705	62.0	66.0	68.0	0.50	0.62	0.71	0.468
		1110	71	1.17	3.7	2.3	2.7	0.0221	117	257	20.9	43	1110	57.5	59.5	64.0	0.37	0.47	0.56	0.630
		830	80	1.56	3.8	2.4	2.9	0.0681	56	123	24.3	42	830	50.5	57.5	59.5	0.38	0.48	0.59	0.644
0.25	0.33	3415	63	0.501	6.6	4.8	4.7	0.0047	23	51	13.2	52	3415	64.0	68.0	70.0	0.53	0.65	0.74	0.606
		1700	71	1.01	5.3	2.8	3.1	0.0157	68	150	14.3	43	1700	64.0	68.0	70.0	0.50	0.62	0.71	0.631
		1100	71	1.55	4.4	3.7	2.5	0.0223	30	66	20.9	43	1100	59.5	59.5	64.0	0.36	0.47	0.56	0.875
		830	80	2.06	3.8	2.4	2.8	0.0802	46	101	26.5	42	830	52.5	59.5	62.0	0.38	0.49	0.60	0.843
0.37	0.5	3420	71	0.757	7.1	3.8	3.9	0.0095	26	57	16.5	56	3420	70.0	74.0	75.5	0.64	0.76	0.82	0.750
		1690	71	1.53	5.5	3.2	3.3	0.0195	55	121	16.5	43	1690	68.0	72.0	74.0	0.49	0.61	0.71	0.884
		1140	80	2.27	4.9	2.4	2.8	0.0600	28	62	22.1	43	1140	66.0	70.0	74.0	0.47	0.60	0.70	0.897
		850	90S/L	3.05	4.2	2.4	2.8	0.1305	51	112	35.3	43	850	59.5	66.0	70.0	0.38	0.48	0.58	1.14
0.55	0.75	3415	71	1.14	7.3	3.7	3.9	0.0112	17	37	15.4	56	3415	74.0	75.5	77.0	0.66	0.78	0.84	1.07
		1720	80	2.26	7.3	3.5	4	0.0605	22	48	22.1	44	1720	74.0	77.0	80.0	0.60	0.73	0.78	1.11
		1120	80	3.47	5.3	2.7	3	0.0802	21	46	26.5	43	1120	68.0	70.0	74.0	0.46	0.60	0.70	1.33
		845	90S/L	4.60	4.1	2.1	2.5	0.1566	41	90	44.1	43	845	64.0	68.0	72.0	0.41	0.52	0.62	1.55
0.75	1	3450	80	1.50	8.0	4.9	5	0.0180	32	70	25.4	59	3450	75.5	80.0	81.5	0.62	0.74	0.81	1.43
		1760	90S/L	2.94	8.6	2.8	3.9	0.1163	22	48	36.4	49	1760	80.0	82.5	85.5	0.57	0.70	0.78	1.41
		1155	90S/L	4.49	6.4	3	3.5	0.0000	36	79	48.5	49	1155	77.0	81.5	82.5	0.46	0.59	0.68	1.68
		860	100L	6.02	4.8	2	2.7	0.3014	61	134	57.3	50	860	70.0	74.0	75.5	0.38	0.50	0.59	2.11
1.1	1.5	3450	80	2.25	8.0	5.3	5.2	0.0356	27	59	27.6	59	3450	78.5	81.5	84.0	0.62	0.74	0.81	2.03
		1760	90S/L	4.42	8.5	2.9	3.9	0.1305	16	35	37.5	49	1760	80.0	84.0	86.5	0.57	0.70	0.78	2.05
		860	100L	9.04	4.9	2.2	2.7	0.3393	42	92	62.8	50	860	74.0	75.5	78.5	0.38	0.50	0.59	2.98
1.5	2	3485	90S/L	2.97	8.4	4.1	4.4	0.0475	16	35	34.2	62	3485	80.0	82.5	85.5	0.64	0.75	0.82	2.69
		1755	90S/L	5.90	8.3	3	4	0.1566	14	31	43.0	49	1755	82.5	85.5	86.5	0.56	0.69	0.78	2.79
		855	112M	12.1	5.7	2.8	3.3	0.5648	38	84	79.4	46	855	77.0	80.0	82.5	0.44	0.57	0.64	3.57
2.2	3	3480	90S/L	4.47	8.4	4.3	4.6	0.0617	14	31	44.1	62	3480	84.0	85.5	86.5	0.64	0.76	0.83	3.85
		1760	112M	8.83	7.7	2.2	3.4	0.3393	33	73	79.4	56	1760	85.5	87.5	89.5	0.59	0.72	0.79	3.91
		1740	100L	8.93	7.6	3.8	3.7	0.2136	20	44	59.5	---	1740	86.6	88.2	89.5	0.59	0.72	0.79	3.91
		1175	132S	13.2	6.1	1.8	3.1	0.0000	50	110	126	55	1175	84.0	87.5	89.5	0.49	0.62	0.70	4.41
		860	132S	18.1	6.7	2.7	3.1	1.64	32	70	139	48	860	78.5	82.5	84.0	0.49	0.62	0.70	4.70

Continued on next page

Data subject to change without notice.

Valid for lines:

IEC TRU-METRIC™ - THREE PHASE
TEFC - Foot Mount - IE3 - Aluminum Frames

Output		Rated Speed (rpm)	Frame	Full Load Torque (Nm)	Locked Rotor Current Il/In	Locked Rotor Torque Tl/Tn	Break-down Torque Tb/Tn	Inertia J (lb-ft²)	Allowable locked rotor time (s)		Weight (lb)	Sound dB(A)	460 V							
														% of full load						
														Efficiency			Power Factor			
kW	HP								Hot	Cold			Rated speed (rpm)	50	75	100	50	75	100	Full load current In (A)
3	4	3510	100L	5.90	9.2	3.8	5	0.1519	18	40	60.6	67	3510	82.5	86.5	88.5	0.68	0.79	0.85	5.01
		1740	100L	11.9	8.6	4.6	4.8	0.2848	18	40	82.7	54	1740	84.0	86.5	89.5	0.59	0.71	0.79	5.33
		1170	132S	17.7	6.3	1.8	2.9	1.07	68	150	130	55	1170	85.5	88.5	89.5	0.49	0.62	0.70	6.01
		1170	132M	17.7	6.3	1.8	2.9	1.07	68	150	132	55	1170	85.5	88.5	89.5	0.49	0.62	0.70	6.01
		860	132M	24.1	6.9	2.9	3.4	1.99	26	57	148	48	860	80.0	82.5	85.5	0.49	0.62	0.70	6.29
4	5.5	3505	112M	8.13	8.6	3.1	4.4	0.1898	24	53	79.4	64	3505	85.5	87.5	88.5	0.67	0.79	0.85	6.67
		3505	112M	11	8.6	3.1	4.4	0.1898	24	53	79.4	64	3505	85.5	87.5	88.5	0.67	0.79	0.85	6.67
		1755	112M	16.2	8.0	2.5	3.5	0.4312	19	42	83.8	56	1755	87.5	89.5	89.5	0.58	0.70	0.77	7.10
		1755	112M	22	8	2.5	3.5	0.4312	19	42	83.8	56	1755	87.5	89.5	89.5	0.6	0.72	0.79	7.1
		1165	132M	24.5	6.6	1.9	3	1.34	43	95	128	52	1165	85.5	88.5	89.5	0.50	0.63	0.71	7.90
		1165	132M	33.2	6.6	1.9	3	1.34	43	95	128	52	1165	85.5	88.5	89.5	0.5	0.63	0.71	7.9
5.5	7.5	3530	132S	11.0	8.6	2.9	4.1	0.5126	29	64	130	67	3530	85.5	87.5	89.5	0.70	0.81	0.86	8.97
		3530	132S	14.9	8.6	2.9	4.1	0.5126	29	64	130	67	3530	85.5	87.5	89.5	0.7	0.81	0.86	8.97
		3530	132M	14.9	8.6	2.9	4.1	0.5126	29	64	137	67	3530	85.5	87.5	89.5	0.7	0.81	0.86	8.97
		1765	132S	22.0	10.1	2.6	4.3	1.25	18	40	139	56	1765	88.5	91.0	91.7	0.65	0.77	0.83	9.07
		1765	132S	29.8	8.9	2.6	4.3	1.25	18	40	139	56	1765	88.5	91	91.7	0.65	0.77	0.83	9.07
		1765	132M	29.8	8.9	2.6	4.3	1.25	18	40	146	56	1765	88.5	91	91.7	0.65	0.77	0.83	9.07
7.5	10	3535	132S	14.7	9.1	3.3	4.4	0.5980	21	46	139	67	3535	86.5	89.5	90.2	0.68	0.79	0.85	12.3
		3535	132S	19.9	9.1	3.3	4.4	0.598	21	46	139	67	3535	86.5	89.5	90.2	0.68	0.79	0.85	12.3
		3535	132M	19.9	9.1	3.3	4.4	0.598	21	46	146	67	3535	86.5	89.5	90.2	0.68	0.79	0.85	12.3
		1770	132M	29.3	9.0	2.7	4.3	1.52	16	35	154	56	1770	90.2	91.0	91.7	0.65	0.77	0.83	12.2
		1770	132M	39.7	9	2.7	4.3	1.52	16	35	154	56	1770	90.2	91	91.7	0.66	0.78	0.84	12.2
9.2	12.5	3530	132M	18.3	9.0	3.2	4.1	0.7261	20	44	154	67	3530	88.5	90.2	91.0	0.73	0.83	0.87	14.6
		3530	132M	24.9	9	3.2	4.1	0.7261	20	44	154	67	3530	88.5	90.2	91	0.73	0.83	0.87	14.6

IEC TRU-METRIC™ - THREE PHASE - Cast Iron Frame

Valid for lines:

EC TRU-METRIC™ - THREE PHASE
TEFC - Foot Mount - IE3 - Cast Iron Frames

Output		RPM	Frame	Volts	Frequency	Full Load Current In (A)	Locked Rotor Current		Full Load Torque (Nm)	Locked Rotor Torque Tl/Tn	Break-down Torque Tb/Tn	Efficiency			Power Factor			Service Factor	Inertia J (lb-ft2)	Weight (lb)	Sound dB(A)	Allowable lockedrotor time (s)	
kW	HP						Code	II/In				50	75	100	50	75	100					Hot	Cold
0.12	0.16	3430	63	460	60	0.322	M	6.4	0.247	4.5	4.6	55	62	64	0.54	0.65	0.73	1.25	0.003	13.7	52	37	81
		1710	63	460	60	0.331	K	5.2	0.495	2.6	3	57.5	59.5	64	0.5	0.62	0.71	1.25	0.010	11.5	44	53	117
		1120	63	460	60	0.444	J	3.5	0.755	2.1	2.5	46	52.5	57.5	0.4	0.5	0.59	1.25	0.016	17	43	56	123
		825	71	460	60	0.595	J	2.5	1.03	1.8	2.4	46	52.5	55	0.3	0.37	0.46	1.25	0.022	25.4	41	223	491
0.18	0.25	3415	63	460	60	0.449	L	6.3	0.371	4.4	4.4	57.5	64	68	0.54	0.66	0.74	1.25	0.004	14.8	52	28	62
		1705	63	460	60	0.468	K	5.7	0.744	3	3.3	62	66	68	0.5	0.62	0.71	1.25	0.014	15.9	44	40	88
		1110	71	460	60	0.63	J	3.7	1.14	2.3	2.7	57.5	59.5	64	0.37	0.47	0.56	1.25	0.022	25.4	43	117	257
		830	80	460	60	0.644	J	3.8	1.53	2.4	2.9	50.5	57.5	59.5	0.38	0.48	0.59	1.25	0.068	29.8	42	56	123
0.25	0.33	3415	63	460	60	0.606	L	6.6	0.516	4.8	4.7	64	68	70	0.53	0.65	0.74	1.25	0.005	15.9	52	23	51
		1700	71	460	60	0.631	K	5.3	1.04	2.8	3.1	64	68	70	0.5	0.62	0.71	1.25	0.016	17.6	43	68	150
		1100	71	460	60	0.875	L	4.4	1.6	3.7	2.5	59.5	59.5	64	0.36	0.47	0.56	1.25	0.022	25.4	43	30	66
		830	80	460	60	0.843	J	3.8	2.12	2.4	2.8	52.5	59.5	62	0.38	0.49	0.6	1.25	0.080	32	42	46	101
0.37	0.5	3420	71	460	60	0.75	K	7.1	0.762	3.8	3.9	70	74	75.5	0.64	0.76	0.82	1.25	0.009	16.5	56	26	57
		1690	71	460	60	0.884	J	5.5	1.54	3.2	3.3	68	72	74	0.49	0.61	0.71	1.25	0.019	20.9	43	55	121
		1140	80	460	60	0.897	H	4.9	2.29	2.4	2.8	66	70	74	0.47	0.6	0.7	1.25	0.060	27.6	43	28	62
		850	90S	460	60	1.14	J	4.2	3.07	2.4	2.8	59.5	66	70	0.38	0.48	0.58	1.25	0.131	41.9	43	51	112
0.55	0.75	3415	71	460	60	1.07	K	7.3	1.14	3.7	3.9	74	75.5	77	0.66	0.78	0.84	1.25	0.011	18.7	56	17	37
		1720	80	460	60	1.11	K	7.3	2.25	3.5	4	74	77	80	0.6	0.73	0.78	1.25	0.061	27.6	44	22	48
		1120	80	460	60	1.33	J	5.3	3.46	2.7	3	68	70	74	0.46	0.6	0.7	1.25	0.080	32	43	21	46
		845	90L	460	60	1.55	H	4.1	4.59	2.1	2.5	64	68	72	0.41	0.52	0.62	1.25	0.157	50.7	43	41	90
0.75	1	3450	80	460	60	1.43	L	8	1.53	4.9	5	75.5	80	81.5	0.62	0.74	0.81	1.25	0.018	29.8	59	32	70
		1760	90S	460	60	1.41	L	8.6	3	2.8	3.9	80	82.5	85.5	0.57	0.7	0.78	1.25	0.116	40.8	49	22	48
		1155	L90L	460	60	1.68	K	6.4	4.58	3	3.5	77	81.5	82.5	0.46	0.59	0.68	1.25	0	55.1	49	36	79
		860	100L	460	60	2.11	K	4.8	6.15	2	2.7	70	74	75.5	0.38	0.5	0.59	1.25	0.301	67.3	50	61	134
1.1	1.5	3450	80	460	60	2.03	K	8	2.25	5.3	5.2	78.5	81.5	84	0.62	0.74	0.81	1.25	0.036	33.1	59	27	59
		1760	90S	460	60	2.05	L	8.5	4.4	2.9	3.9	80	84	86.5	0.57	0.7	0.78	1.25	0.131	43	49	16	35
		1150	100L	460	60	2.31	H	5.7	6.74	2.1	2.8	82.5	84	85.5	0.5	0.63	0.7	1.25	0.261	62.8	44	42	92
		860	100L	460	60	2.98	J	4.9	9.01	2.2	2.7	74	75.5	78.5	0.38	0.5	0.59	1.25	0.339	72.8	50	42	92
1.5	2	3485	90S	460	60	2.69	L	8.4	3.03	4.1	4.4	80	82.5	85.5	0.64	0.75	0.82	1.25	0.047	40.8	62	16	35
		1755	90L	460	60	2.79	L	8.3	6.02	3	4	82.5	85.5	86.5	0.56	0.69	0.78	1.25	0.157	50.7	49	14	31
		1155	100L	460	60	3.15	J	6.3	9.15	2.5	3.2	82.5	85.5	86.5	0.48	0.61	0.69	1.25	0.339	70.6	44	31	68
		855	112M	460	60	3.57	K	5.7	12.4	2.8	3.3	77	80	82.5	0.44	0.57	0.64	1.25	0.565	94.8	46	38	84

Continued on next page

Data subject to change without notice.

Valid for lines:

EC TRU-METRIC™ - THREE PHASE
TEFC - Foot Mount - IE3 - Cast Iron Frames

Output		RPM	Frame	Volts	Frequency	Full Load Current In (A)	Locked Rotor Current		Full Load Torque (Nm)	Locked Rotor Torque TI/Tn	Break-down Torque Tb/Tn	Efficiency			Power Factor			Service Factor	Inertia J (lb-ft2)	Weight (lb)	Sound dB(A)	Allowable lockedrotor time (s)	
kW	HP						Code	II/In				50	75	100	50	75	100					Hot	Cold
2.2	3	3480	90L	460	60	3.85	K	8.4	4.46	4.3	4.6	84	85.5	86.5	0.64	0.76	0.83	1.25	0.062	51.8	62	14	31
		1745	100L	460	60	4.05	K	8.3	8.89	4.1	4.4	84	86.5	87.5	0.58	0.71	0.78	1.25	0.214	69.5	53	20	44
		1760	112M	460	60	3.91	J	7.7	8.81	2.2	3.4	85.5	87.5	89.5	0.59	0.72	0.79	1.25	0.339	90.4	56	33	73
		1175	132S	460	60	4.41	J	6.1	13.2	1.8	3.1	84	87.5	89.5	0.49	0.62	0.7	1.25	0	139	55	50	110
		860	132S	460	60	4.7	K	6.7	18	2.7	3.1	78.5	82.5	84	0.49	0.62	0.7	1.25	1.637	152	48	32	70
3	4	3510	100L	460	60	5.01	L	9.2	6.02	3.8	5	82.5	86.5	88.5	0.68	0.79	0.85	1.25	0.152	70.6	67	18	40
		1740	L100L	460	60	5.39	L	8.6	12.2	4.6	4.8	84	86.5	88.5	0.59	0.71	0.79	1.25	0.285	82.7	54	18	40
		1170	132S	460	60	6.01	J	6.3	18.1	1.8	2.9	85.5	88.5	89.5	0.49	0.62	0.7	1.25	1.075	135	55	68	150
		860	132M	460	60	6.29	K	6.9	24.6	2.9	3.4	80	82.5	85.5	0.49	0.62	0.7	1.25	1.989	165	48	26	57
4	5.5	3505	112M	460	60	6.67	K	8.6	8.04	3.1	4.4	85.5	87.5	88.5	0.67	0.79	0.85	1.25	0.190	90.4	64	24	53
		1755	112M	460	60	7.1	K	8	16.1	2.5	3.5	87.5	89.5	89.5	0.6	0.72	0.79	1.25	0.431	97	56	19	42
		1165	132M	460	60	7.9	J	6.6	24.2	1.9	3	85.5	88.5	89.5	0.5	0.63	0.71	1.25	1.343	146	52	43	95
		880	160M	460	60	8.17	G	5.2	32	2	2.7	84	86.5	86.5	0.49	0.62	0.71	1.25	2.386	251	54	47	103
5.5	7.5	3505	112M	460	60	9.07	K	8.8	11.1	3.3	3.9	87.5	88.5	89.5	0.68	0.79	0.85	1.25	0.224	88.2	69	18	40
		3530	132S	460	60	8.97	K	8.6	11	2.9	4.1	85.5	87.5	89.5	0.7	0.81	0.86	1.25	0.513	143	67	29	64
		1765	132S	460	60	9.07	K	8.9	22	2.6	4.3	88.5	91	91.7	0.65	0.77	0.83	1.25	1.254	152	56	18	40
		1170	132M/L	460	60	10.8	K	7.4	33.1	2.4	3.5	85.5	88.5	91	0.48	0.61	0.7	1.25	1.792	176	52	32	70
		1180	160M	460	60	9.48	H	7	32.8	2.4	3.1	88.5	90.2	91	0.61	0.73	0.8	1.25	3.125	254	59	34	75
		880	160M	460	60	11.1	G	5.3	44	2	2.7	85.5	86.5	87.5	0.49	0.62	0.71	1.25	2.897	271	54	36	79
7.5	10	3535	132S	460	60	12.3	K	9.1	15	3.3	4.4	86.5	89.5	90.2	0.68	0.79	0.85	1.25	0.598	152	67	21	46
		1770	132M	460	60	12.2	K	9	29.9	2.7	4.3	90.2	91	91.7	0.66	0.78	0.84	1.25	1.523	172	56	16	35
		1180	160M	460	60	13.1	J	7.4	44.8	2.7	3.5	87.5	89.5	91	0.59	0.72	0.79	1.25	2.897	269	59	25	55
		880	160L	460	60	15.2	H	5.7	60.1	2.4	2.9	86.5	87.5	88.5	0.49	0.62	0.7	1.25	3.749	320	54	26	57
9.2	12.5	3530	132M	460	60	14.6	K	9	18.4	3.2	4.1	88.5	90.2	91	0.73	0.83	0.87	1.25	0.726	172	67	20	44
		1775	160M	460	60	15.2	K	8.3	36.5	3	3.7	87.5	90.2	92.4	0.66	0.77	0.82	1.25	1.906	240	64	17	37
		1180	160L	460	60	15.7	J	7.5	54.9	2.7	3.4	88.5	90.2	91.7	0.6	0.73	0.8	1.25	3.409	302	59	22	48
		880	180M	460	60	16.1	J	7	73.7	2.2	3	88.5	89.5	89.5	0.62	0.74	0.8	1.25	6.110	381	54	20	44
11	15	3525	132M	460	60	17.2	J	8.7	22	3	3.7	88.5	90.2	91	0.74	0.84	0.88	1.25	0.726	172	67	15	33
		3555	160M	460	60	17.9	K	8.7	21.8	3	4.3	88.5	91	91.7	0.69	0.8	0.84	1.25	0.994	254	72	24	53
		1775	160L	460	60	18.2	K	8.3	43.7	3.1	3.8	89.5	91.7	92.4	0.63	0.75	0.82	1.25	2.382	271	64	16	35
		1775	160M	460	60	18.2	K	8.3	43.7	3.1	3.8	89.5	91.7	92.4	0.63	0.75	0.82	1.25	2.382	271	64	16	35
		1180	160L	460	60	18.8	J	7.5	65.7	2.8	3.4	88.5	90.2	91.7	0.61	0.73	0.8	1.25	3.749	315	59	20	44
		880	180L	460	60	19.5	J	7.6	88.1	2.6	3.4	88.5	89.5	89.5	0.59	0.71	0.79	1.25	6.753	408	54	16	35

Continued on next page

IEC TRU-METRIC™ - THREE PHASE - Cast Iron Frame continued

Valid for lines:

EC TRU-METRIC™ - THREE PHASE
TEFC - Foot Mount - IE3 - Cast Iron Frames

Output		RPM	Frame	Volts	Frequency	Full Load Current In (A)	Locked Rotor Current		Full Load Torque (Nm)	Locked Rotor Torque Tl/Tn	Break-down Torque Tb/Tn	Efficiency			Power Factor			Service Factor	Inertia J (lb-ft2)	Weight (lb)	Sound dB(A)	Allowable lockedrotor time (s)	
kW	HP						Code	Il/In				50	75	100	50	75	100					Hot	Cold
15	20	3550	160M	460	60	24.4	K	8.4	29.8	3	4.1	89.5	91.7	91.7	0.69	0.8	0.84	1.25	1.120	262	72	18	40
		1775	160L	460	60	25	K	8.3	59.6	3.3	4	91	91.7	93	0.62	0.74	0.81	1.25	2.882	320	64	13	29
		1180	180L	460	60	24.7	L	9.2	89.6	3	3.9	91	91.7	91.7	0.68	0.79	0.83	1.25	7.687	426	59	13	29
		885	200L	460	60	28	G	5.2	119	2	2.4	89.5	91	91	0.55	0.67	0.74	1.25	10.848	518	56	44	97
18.5	25	3550	160L	460	60	29.9	K	8.9	36.7	3.3	4.4	90.2	91.7	92.4	0.69	0.8	0.84	1.25	1.318	300	72	15	33
		1775	180M	460	60	30.6	J	8.1	73.5	3.3	3.8	91	92.4	93.6	0.62	0.75	0.81	1.25	4.749	397	64	21	46
		1180	200L	460	60	30.8	H	7	110	2.6	3.1	91	91.7	93	0.62	0.74	0.81	1.25	9.162	492	62	25	55
		885	225S/M	460	60	31.6	H	7	147	1.9	3.1	93	93	93	0.6	0.72	0.79	1.25	26.274	831	60	43	95
22	30	3555	180M	460	60	34.7	J	8.5	43.6	2.8	4.1	90.2	91.7	92.4	0.71	0.81	0.86	1.25	2.828	388	72	17	37
		1775	180L	460	60	36	K	8.6	87.4	3.5	3.9	91	92.4	93.6	0.65	0.76	0.82	1.25	5.392	437	64	19	42
		1180	200L	460	60	37.1	H	7.2	131	2.8	3.3	91.7	92.4	93	0.62	0.74	0.8	1.25	10.828	529	62	23	51
		885	225S/M	460	60	37.6	H	6.9	175	2	3.2	93	93	93	0.59	0.71	0.79	1.25	30.609	886	60	38	84
30	40	3565	200L	460	60	47.1	J	8.3	59.3	3	3.3	91	92.4	93	0.73	0.82	0.86	1.25	4.444	538	74	26	57
		1780	200L	460	60	49.4	K	8.2	119	3	3.6	91.7	93	94.1	0.63	0.75	0.81	1.25	8.231	536	66	19	42
		1185	225S/M	460	60	47.6	J	7.7	178	2.7	3.3	93	94.1	94.1	0.67	0.78	0.84	1.25	30.565	884	66	30	66
		890	250S/M	460	60	50.9	H	6.6	238	2.2	2.6	93	93.6	93.6	0.6	0.72	0.79	1.25	33.889	1080	60	40	88
37	50	3565	200L	460	60	57.7	J	8.3	73.1	3	3.3	91.7	93	93.6	0.72	0.82	0.86	1.25	5.028	584	74	22	48
		1780	200L	460	60	60.7	J	8.1	146	3	3.6	93	93.6	94.5	0.63	0.75	0.81	1.25	9.478	626	66	18	40
		1780	225S/M	460	60	58.5	J	8.2	146	3.1	3.7	93	94.1	94.5	0.68	0.79	0.84	1.25	20.934	864	67	25	55
		1185	250S/M	460	60	58.8	J	7.8	220	2.8	3.3	93.6	94.1	94.1	0.69	0.79	0.84	1.25	33.792	1072	68	29	64
		890	280S/M	460	60	64.1	H	6.7	293	2	2.7	93	94.1	94.1	0.59	0.71	0.77	1.25	66.934	1484	63	45	99
45	60	3565	225S/M	460	60	66.7	H	7.8	89	2.4	3.4	93	94.1	94.1	0.8	0.87	0.9	1.25	10.476	917	79	29	64
		1780	225S/M	460	60	69.9	J	8.2	178	3.2	3.7	93.6	94.5	95	0.69	0.79	0.85	1.25	22.614	926	67	24	53
		1190	280S/M	460	60	74.7	J	7.2	267	2.6	3.4	93	94.5	94.5	0.62	0.74	0.8	1.25	66.474	1495	69	48	106
		890	280S/M	460	60	77	H	6.4	356	1.9	2.6	93.6	94.1	94.1	0.59	0.71	0.78	1.25	82.807	1634	63	42	92
55	75	3570	250S/M	460	60	80.3	H	8.2	109	2.9	3.7	93.6	94.5	94.5	0.81	0.88	0.91	1.25	11.599	1069	79	28	62
		1785	250S/M	460	60	85.1	J	8.2	217	3.3	4.1	93.6	94.5	95.4	0.67	0.79	0.85	1.25	26.323	1118	68	27	59
		1190	280S/M	460	60	90.2	H	7	326	2.6	3.3	93.6	94.5	94.5	0.64	0.75	0.81	1.25	77.110	1594	69	46	101
		890	315S/M	460	60	93.7	H	6.6	436	1.9	2.6	93.6	94.5	94.5	0.62	0.73	0.78	1.25	74.622	2064	66	63	139
75	100	3570	250S/M	460	60	109	J	8.3	148	2.8	3.5	94.1	95	95	0.83	0.89	0.91	1.25	12.491	1103	79	18	40
		3580	280S/M	460	60	111	H	7.9	148	2.4	3.5	92.4	94.1	94.5	0.8	0.87	0.9	1.25	28.636	1603	81	59	130
		1780	250S/M	460	60	115	J	8.2	297	3.2	4.1	94.1	95	95.4	0.7	0.81	0.86	1.25	28.806	1171	68	20	44
		1785	280S/M	460	60	116	J	7.9	296	2.7	3.4	93	94.5	95.4	0.72	0.81	0.85	1.25	53.483	1607	73	47	103
		1190	315S/M	460	60	122	H	7	444	2.6	3.1	94.1	95	95	0.64	0.75	0.81	1.25	79.220	2121	70	61	134
		890	315S/M	460	60	127	H	6.5	594	2	2.6	94.1	95	95	0.62	0.73	0.78	1.25	95.722	2313	66	60	132

Continued on next page

Data subject to change without notice.

Valid for lines:

EC TRU-METRIC™ - THREE PHASE
TEFC - Foot Mount - IE3 - Cast Iron Frames

Output		RPM	Frame	Volts	Frequency	Full Load Current In (A)	Locked Rotor Current		Full Load Torque (Nm)	Locked Rotor Tl/Tn	Break-down Torque Tb/Tn	Efficiency			Power Factor			Service Factor	Inertia J (lb-ft2)	Weight (lb)	Sound dB(A)	Allowable lockedrotor time (s)	
kW	HP						Code	Il/In				50	75	100	50	75	100					Hot	Cold
90	125	3580	280S/M	460	60	132	H	7.7	177	2.3	3.3	93	94.5	95	0.82	0.88	0.9	1.25	31.817	1680	81	52	114
		1785	280S/M	460	60	139	H	7.7	355	2.7	3.4	93.6	95	95.4	0.71	0.81	0.85	1.25	60.554	1713	73	41	90
		1190	315S/M	460	60	146	H	7	533	2.6	3.1	94.5	95.4	95.4	0.64	0.75	0.81	1.25	94.845	2311	70	61	134
		890	315S/M	460	60	152	H	6.8	713	2.1	2.7	94.5	95	95	0.61	0.73	0.78	1.25	114.335	2534	66	55	121
110	150	3580	280S/M	460	60	161	H	8.2	217	2.6	3.6	93.6	95	95	0.81	0.87	0.9	1.25	36.906	1806	81	37	81
		3585	315S/M	460	60	163	J	8.4	216	2.5	3.7	92.4	94.1	95	0.78	0.86	0.89	1.25	29.184	2121	81	59	130
		1785	280S/M	460	60	170	J	7.9	434	2.8	3.5	94.5	95.4	95.8	0.72	0.81	0.85	1.25	77.069	1949	73	44	97
		1790	315S/M	460	60	170	H	7.8	433	3	3.2	93.6	95	95.8	0.71	0.81	0.85	1.25	58.719	2227	75	57	125
		1190	315S/M	460	60	178	H	7	651	2.5	2.7	95	95.8	95.8	0.64	0.75	0.81	1.25	105.383	2439	70	53	117
		890	315L	460	60	186	H	6.7	871	2.1	2.7	94.5	95.4	95.4	0.6	0.72	0.78	1.25	298.059	3014	71	49	108
		890	315S/M	460	60	186	H	6.7	871	2.1	2.7	94.5	95.4	95.4	0.6	0.72	0.78	1.25	298.059	3014	66	49	108
		895	355M/L	460	60	186	H	7	866	1.2	2.9	94.5	95.4	95.4	0.6	0.72	0.78	1.15	298.059	3272	75	103	227
132	175	3580	315S/M	460	60	193	J	8.2	260	2.5	3.4	93.6	94.5	95.4	0.82	0.88	0.9	1.25	35.232	2311	81	54	119
		1790	315S/M	460	60	203	J	7.9	520	3.1	3.3	94.1	95.4	96.2	0.72	0.81	0.85	1.25	69.729	2414	75	57	125
		1190	315S/M	460	60	214	H	7.2	782	2.9	3.2	95	95.8	95.8	0.63	0.75	0.81	1.25	121.190	2624	70	46	101
		895	315L	460	60	223	H	6.9	1039	2.3	2.7	95	95.4	95.4	0.6	0.72	0.78	1.25	312.962	3325	71	47	103
		895	355M/L	460	60	223	J	7.1	1039	1.3	2.8	94.5	95.4	95.4	0.61	0.73	0.78	1.15	342.768	3499	75	82	180
150	200	3580	315S/M	460	60	219	J	8.5	295	2.6	3	93.6	95.4	95.4	0.79	0.87	0.9	1.25	0	2401	81	46	101
		1790	315S/M	460	60	228	H	7.8	591	2.8	2.8	94.5	95.8	96.2	0.72	0.82	0.86	1.25	105.145	2478	75	43	95
		1190	315L	460	60	240	H	7.3	888	2.8	3	95.4	95.8	95.8	0.66	0.77	0.82	1.25	264.247	3010	71	41	90
		1190	315S/M	460	60	240	H	7.3	888	2.8	3	95.4	95.8	95.8	0.66	0.77	0.82	1.25	136.998	3010	70	25	55
160	220	3580	315S/M	460	60	234	J	8.4	315	2.7	3.5	94.1	95	95.4	0.81	0.88	0.9	1.25	41.209	2489	81	43	95
		1790	315S/M	460	60	246	H	7.8	630	3.2	3.2	94.5	95.4	96.2	0.72	0.82	0.85	1.25	76.875	2540	75	49	108
		1190	315L	460	60	259	H	7.4	948	3	3.2	95.4	95.8	95.8	0.64	0.76	0.81	1.25	264.247	3193	71	45	99
		1195	355M/L	460	60	269	H	7	944	2.4	2.9	94.5	95.4	95.8	0.6	0.72	0.78	1.15	241.763	3515	77	57	125
		895	355M/L	460	60	265	H	7	1260	1.2	2.8	95	95.8	95.8	0.61	0.73	0.79	1.15	409.831	3852	75	83	183
185	250	3580	315S/M	460	60	269	J	8.3	364	2.9	3.4	94.5	95.4	95.8	0.82	0.88	0.9	1.25	44.042	2639	81	42	92
		1790	315S/M	460	60	284	H	7.8	728	3.2	3.1	95	95.8	96.2	0.72	0.81	0.85	1.25	82.158	2695	75	39	86
		1195	355M/L	460	60	311	H	7.1	1091	2.5	2.9	94.3	95.4	95.8	0.6	0.72	0.78	1.15	263.741	3674	77	48	106
		895	355M/L	460	60	311	H	7.1	1457	1.4	2.8	95	95.8	95.8	0.61	0.73	0.78	1.15	439.637	4011	75	64	141

Continued on next page

IEC TRU-METRIC™ - THREE PHASE - Cast Iron Frame continued

Valid for lines:

EC TRU-METRIC™ - THREE PHASE
TEFC - Foot Mount - IE3 - Cast Iron Frames

Output		RPM	Frame	Volts	Frequency	Full Load Current In (A)	Locked Rotor Current		Full Load Torque (Nm)	Locked Rotor Torque Tl/Tn	Break-down Torque Tb/Tn	Efficiency			Power Factor			Service Factor	Inertia J (lb-ft2)	Weight (lb)	Sound dB(A)	Allowable lockedrotor time (s)	
kW	HP						Code	Il/In				50	75	100	50	75	100					Hot	Cold
200	270	3580	315L	460	60	291	H	7.8	394	3	3.5	94.5	95.4	95.8	0.81	0.88	0.9	1.25	51.379	2878	82	40	88
		3585	355M/L	460	60	285	H	7.8	393	2.1	3.3	94.5	95.4	95.8	0.85	0.9	0.92	1.15	102.260	3389	84	67	147
		1790	315L	460	60	307	H	7.8	787	3.1	3.1	95	95.8	96.2	0.72	0.82	0.85	1.25	93.366	2937	77	40	88
		1790	315S/M	460	60	307	H	7.8	787	3.1	3.1	95	95.8	96.2	0.72	0.82	0.85	1.25	87.635	2937	75	40	88
		1790	355M/L	460	60	307	J	7.9	787	2.8	3.2	95	95.8	96.2	0.71	0.8	0.85	1.15	166.318	3296	78	47	103
		1195	355M/L	460	60	332	H	6.9	1180	2.4	2.8	94.2	95.4	95.8	0.62	0.73	0.79	1.15	285.719	3834	77	58	128
		895	355M/L	460	60	332	H	6.8	1575	1.2	2.7	95	95.8	95.8	0.61	0.73	0.79	1.15	448.990	4170	75	70	154
220	300	3580	315L	460	60	315	H	7.9	433	2.7	3.2	95.4	95.8	96.2	0.84	0.89	0.91	1.25	122.709	3021	82	44	97
		3585	355M/L	460	60	315	H	7.8	432	2.3	3.3	94.5	95.8	96.2	0.84	0.9	0.91	1.15	109.420	3495	84	54	119
		1790	315L	460	60	338	H	7.9	866	3.4	3.3	95.4	95.8	96.2	0.72	0.81	0.85	1.25	162.717	3153	77	40	88
		1790	355M/L	460	60	342	J	7.9	866	2.7	3.2	95	96.2	96.2	0.7	0.8	0.84	1.15	178.381	3427	78	46	101
		1195	355M/L	460	60	370	H	7	1297	2.6	2.9	94.8	95.8	95.8	0.6	0.72	0.78	1.15	318.076	4088	77	50	110
250	340	3580	315L	460	60	358	H	7.8	492	2.8	3.2	95.4	96.2	96.2	0.84	0.9	0.91	1.25	108.123	3162	82	34	75
		3585	355M/L	460	60	358	H	7.9	491	2.4	3.3	94.5	95.8	96.2	0.86	0.9	0.91	1.15	119.598	3671	84	54	119
		1790	315L	460	60	384	J	7.9	984	3.5	3.4	95.4	96.2	96.2	0.71	0.81	0.85	1.25	199.064	3367	77	38	84
		1790	355M/L	460	60	384	H	7.8	984	2.8	3.1	95	96.2	96.2	0.72	0.81	0.85	1.15	203.864	3574	78	44	97
		1195	355M/L	460	60	419	H	7	1474	2.6	2.8	95.1	95.5	95.9	0.61	0.73	0.78	1.15	356.465	4344	77	51	112
260	350	3585	355M/L	460	60	373	H	7.9	511	2.4	3.3	94.5	95.8	96.2	0.86	0.9	0.91	1.15	119.598	3671	84	55	121
		1790	315L	460	60	384	H	7.9	1024	3.5	3.4	95.4	96.2	96.2	0.71	0.81	0.85	1.25	199.064	3367	77	38	84
		1790	355M/L	460	60	399	H	7.8	1024	2.8	3.1	95	96.2	96.2	0.72	0.81	0.85	1.15	203.864	3574	78	44	97
		1195	355M/L	460	60	436	H	7	1533	2.6	2.8	95.1	95.5	95.9	0.61	0.73	0.78	1.15	356.465	4344	77	51	112
280	380	3585	355M/L	460	60	397	H	7.9	550	2.3	3	94.5	95.8	96.2	0.88	0.92	0.92	1.15	132.321	3861	84	41	90
		1790	355M/L	460	60	430	J	7.9	1102	2.9	3.2	95.4	96.2	96.2	0.72	0.81	0.85	1.15	229.347	3737	78	42	92
		1195	355M/L	460	60	469	H	7	1651	2.4	2.7	95.1	95.7	96	0.61	0.73	0.78	1.15	356.465	4344	77	38	84
315	430	3585	355M/L	460	60	447	H	7.9	619	2.5	3.1	95.4	96.2	96.2	0.88	0.92	0.92	1.15	142.500	4053	84	45	99
		1790	355M/L	460	60	488	J	8.1	1240	3.1	3.5	95.4	96.2	96.5	0.68	0.79	0.84	1.15	254.309	3907	78	41	90
355	480	1790	355M/L	460	60	543	H	7.8	1398	2.7	2.9	95.8	96.2	96.5	0.74	0.83	0.85	1.15	274.938	4141	78	37	81

Data subject to change without notice.

Valid for lines:

GENERAL PURPOSE - THREE PHASE

TEFC – Foot Mount - Super Premium

Output		Rated Speed (rpm)	Frame	Full Load Torque (ft.lb)	Locked Rotor Current		Locked Rotor Torque Tl/Tn	Break-down Torque Tb/Tn	Inertia J (lb-ft²)	Allowable locked rotor time (s)		Weight (lb)	Sound dB(A)	Service Factor	460 V								
																% of full load							
																Efficiency			Power Factor			Full load current In (A)	
HP	kW				Code	Il/In				Hot	Cold				Rated speed (rpm)	50	75	100	50	75	100		
1	0.75	3485	143T	1.49	J	7.2	2.5	3.0	0.0413	36	79	39.7	68.0	1.25	3485	81.5	82.5	84.0	0.69	0.79	0.83	1.35	
		1760	L143T	2.94	L	9.0	2.6	3.3	0.1561	33	73	50.7	51.0	1.25	1760	84.0	86.5	87.5	0.59	0.70	0.79	1.33	
1.5	1.1	3485	143T	2.23	K	8.4	3.0	3.5	0.0468	29	64	41.9	68.0	1.25	3485	84.0	85.5	86.5	0.67	0.78	0.83	1.92	
		1760	L145T	4.42	L	8.8	2.8	3.4	0.1822	20	44	55.1	51.0	1.25	1760	85.5	87.5	88.5	0.62	0.74	0.81	1.93	
2	1.5	3490	143/5T	2.97	K	8.2	3.2	3.6	0.0605	23	51	50.7	68.0	1.25	3490	85.5	87.5	87.5	0.69	0.80	0.84	2.56	
3	2.2	3520	182T	4.42	K	8.5	2.4	3.6	0.1889	50	110	88.2	69.0	1.25	3520	84.0	86.5	88.5	0.70	0.81	0.85	3.67	
		1765	L182T	8.81	J	7.7	2.3	3.2	0.4017	36	79	92.6	56.0	1.25	1765	87.5	88.5	91.0	0.63	0.75	0.81	3.76	
		1175	L213T	13.2	J	6.6	1.8	2.9	1.53	90	198	172	55.0	1.25	1175	87.5	89.5	90.2	0.51	0.63	0.71	4.30	
5	3.7	3505	182/4T	7.39	J	8.2	2.4	3.5	0.2233	30	66	94.8	69.0	1.25	3505	87.5	88.5	90.2	0.73	0.83	0.86	5.99	
		1755	L182/4T	14.8	J	7.5	2.3	3.1	0.4910	20	44	101	56.0	1.25	1755	88.5	90.2	91.0	0.61	0.73	0.80	6.40	
		1170	L213/5T	22.1	H	6.5	1.9	2.5	1.80	70	154	198	55.0	1.25	1170	89.5	91.0	91.0	0.56	0.68	0.75	6.83	
7.5	5.5	3530	213T	11.0	J	7.6	2.3	3.3	0.5512	37	81	141	72.0	1.25	3530	87.5	89.5	91.0	0.73	0.82	0.86	8.82	
		1770	L213T	22.0	K	8.5	2.3	3.5	1.51	20	44	172	58.0	1.25	1770	91.0	92.4	93.0	0.65	0.76	0.83	8.94	
		1175	254T	33.1	H	6.8	2.5	3.1	3.66	50	110	304	59.0	1.25	1175	90.2	91.7	92.4	0.60	0.72	0.79	9.46	
10	7.5	3535	213/5T	14.7	J	8.0	2.4	3.2	0.7209	34	75	172	72.0	1.25	3535	89.5	91.0	91.7	0.77	0.85	0.89	11.5	
		1765	L213/5T	29.4	K	8.4	2.3	3.5	1.78	16	35	181	58.0	1.25	1765	91.7	92.4	93.0	0.66	0.78	0.84	12.0	
		1180	254/6T	43.9	H	6.8	2.4	3.0	4.32	40	88	344	59.0	1.25	1180	91.0	92.4	92.4	0.62	0.74	0.80	12.7	
15	11	3545	254T	21.9	J	7.7	2.7	3.5	1.18	28	62	273	72.0	1.25	3545	90.2	91.7	92.4	0.72	0.82	0.86	17.4	
		1775	254T	43.8	K	8.5	2.8	3.3	2.55	20	44	280	64.0	1.25	1775	91.7	93.0	93.6	0.66	0.76	0.83	17.8	
		1180	284T	65.9	H	7.1	2.6	3.0	7.69	25	55	410	59.0	1.25	1180	91.7	92.4	93.0	0.65	0.76	0.82	18.1	
		1180	284TS	65.9	H	7.1	2.6	3.0	7.69	25	55	410	59.0	1.25	1180	91.7	92.4	93.0	0.65	0.76	0.82	18.1	
20	15	3545	254/6T	29.2	H	7.6	2.6	3.4	1.44	23	51	311	72.0	1.25	3545	91.0	92.4	93.0	0.75	0.84	0.88	23.0	
		1770	254/6T	58.5	J	7.4	2.6	3.0	0.0000	30	66	326	64.0	1.25	1770	93.0	93.6	94.1	0.63	0.75	0.81	24.7	
		1180	284/6T	87.8	J	7.4	2.7	3.0	9.29	20	44	474	59.0	1.25	1180	91.7	92.4	93.0	0.67	0.78	0.83	24.4	
		1180	284/6TS	87.8	J	7.4	2.7	3.0	9.29	20	44	474	59.0	1.25	1180	91.7	92.4	93.0	0.67	0.78	0.83	24.4	
25	18.5	3550	284TS	36.5	H	7.5	2.4	3.3	2.68	20	44	386	72.0	1.25	3550	91.7	93.0	93.6	0.75	0.83	0.87	28.5	
		1775	284T	73.0	K	8.3	3.0	3.4	4.94	26	57	406	64.0	1.25	1775	93.0	94.1	94.5	0.62	0.74	0.81	30.3	
		1775	284TS	73.0	K	8.3	3.0	3.4	4.94	26	57	406	64.0	1.25	1775	93.0	94.1	94.5	0.62	0.74	0.81	30.3	
		1185	324T	109	J	7.3	2.6	3.1	11.2	30	66	527	62.0	1.25	1185	92.4	93.6	94.1	0.61	0.73	0.80	30.8	
		1185	324TS	109	J	7.3	2.6	3.1	11.2	30	66	527	62.0	1.25	1185	92.4	93.6	94.1	0.61	0.73	0.80	30.8	
30	22	3550	284/6TS	43.8	H	7.5	2.4	3.3	3.19	19	42	437	72.0	1.25	3550	92.4	93.6	93.6	0.76	0.84	0.88	33.5	
		1775	284/6T	87.6	J	8.0	3.2	3.5	5.67	25	55	450	64.0	1.25	1775	93.0	94.1	94.5	0.64	0.76	0.82	35.6	
		1775	284/6TS	87.6	J	8.0	3.2	3.5	5.67	25	55	450	64.0	1.25	1775	93.0	94.1	94.5	0.64	0.76	0.82	35.6	
		1185	326TS	131	H	7.0	2.6	3.0	12.9	27	59	584	62.0	1.25	1185	92.4	93.6	94.1	0.60	0.73	0.80	36.7	
		1185	324/6T	131	H	7.0	2.6	3.0	12.9	27	59	584	62.0	1.25	1185	92.4	93.6	94.1	0.60	0.73	0.80	36.7	

Continued on next page

W22 TEFC - Cast Iron - Three Phase - SUPER Premium continued

Valid for lines:

GENERAL PURPOSE - THREE PHASE

TEFC – Foot Mount - Super Premium

Output		Rated Speed (rpm)	Frame	Full Load Torque (ft.lb)	Locked Rotor Current		Locked Rotor Torque Tl/Tn	Break-down Torque Tb/Tn	Inertia J (lb-ft²)	Allowable locked rotor time (s)		Weight (lb)	Sound dB(A)	Service Factor	460 V								
																% of full load							
																Efficiency			Power Factor				
HP	kW				Code	Il/In				Hot	Cold				Rated speed (rpm)	50	75	100	50	75	100	Full load current In (A)
40	30	3565	324TS	58.1	H	7.5	2.8	3.0	4.63	27	59	547	74.0	1.25	3565	92.4	94.1	94.1	0.74	0.83	0.86	46.5
		1780	324T	116	J	7.4	2.6	3.0	8.83	22	48	534	66.0	1.25	1780	93.6	94.5	95.0	0.64	0.75	0.81	48.9
		1780	324TS	116	J	7.4	2.6	3.0	8.83	22	48	534	66.0	1.25	1780	93.6	94.5	95.0	0.64	0.75	0.81	48.9
		1185	364/5T	175	K	8.4	2.6	3.2	32.7	22	48	875	66.0	1.25	1185	93.6	94.5	95.0	0.64	0.76	0.81	48.9
		1185	364/5TS	175	K	8.4	2.6	3.2	32.7	22	48	875	66.0	1.25	1185	93.6	94.5	95.0	0.64	0.76	0.81	48.9
50	37	3570	326TS	72.6	H	7.7	3.0	3.0	0.0000	25	55	606	74.0	1.25	3570	93.0	94.5	94.5	0.74	0.83	0.86	57.1
		3570	324/6TS	72.6	H	7.7	3.0	3.0	0.0000	25	55	606	74.0	1.25	3570	93.0	94.5	94.5	0.74	0.83	0.86	57.1
		1780	326TS	146	H	7.4	2.6	3.0	9.40	20	44	598	66.0	1.25	1780	94.1	95.0	95.4	0.62	0.73	0.81	60.1
		1780	324/6T	146	H	7.4	2.6	3.0	9.40	20	44	598	66.0	1.25	1780	94.1	95.0	95.4	0.62	0.73	0.81	60.1
		1185	364/5T	219	K	8.5	2.6	3.3	33.7	12	26	895	66.0	1.25	1185	93.6	94.5	95.0	0.63	0.75	0.81	60.3
		1185	364/5TS	219	K	8.5	2.6	3.3	33.7	12	26	895	66.0	1.25	1185	93.6	94.5	95.0	0.63	0.75	0.81	60.3
60	45	3570	364/5TS	87.1	H	7.9	2.4	3.2	11.2	25	55	926	79.0	1.25	3570	93.0	94.5	95.0	0.79	0.86	0.89	66.8
		1780	364/5T	175	H	7.6	2.7	3.2	23.3	24	53	897	67.0	1.25	1780	94.5	95.4	95.8	0.69	0.80	0.84	70.2
		1780	364/5TS	175	H	7.6	2.7	3.2	23.3	24	53	897	67.0	1.25	1780	94.5	95.4	95.8	0.69	0.80	0.84	70.2
		1185	404/5T	262	J	7.9	2.8	3.2	39.1	22	48	1111	68.0	1.25	1185	94.1	95.0	95.4	0.65	0.77	0.82	72.2
		1185	404/5TS	262	J	7.9	2.8	3.2	39.1	22	48	1111	68.0	1.25	1185	94.1	95.0	95.4	0.65	0.77	0.82	72.2
75	55	3570	364/5TS	109	H	8.0	2.6	3.2	8.61	14	31	937	79.0	1.25	3570	93.6	95.0	95.0	0.77	0.85	0.88	82.6
		1780	364/5T	218	J	7.7	2.8	3.2	23.3	16	35	919	67.0	1.25	1780	94.5	95.4	95.8	0.68	0.78	0.83	86.8
		1780	364/5TS	218	J	7.7	2.8	3.2	23.3	16	35	919	67.0	1.25	1780	94.5	95.4	95.8	0.68	0.78	0.83	86.8
		1190	404/5T	327	J	8.0	2.8	3.0	41.3	15	33	1125	68.0	1.25	1190	94.1	95.0	95.4	0.64	0.75	0.81	89.3
		1190	404/5TS	327	J	8.0	2.8	3.0	41.3	15	33	1125	68.0	1.25	1190	94.1	95.0	95.4	0.64	0.75	0.81	89.3
100	75	3565	404/5TS	145	H	8	2.9	3.2	14.3	20	44	1180	79	1.25	3565	94.5	95.4	95.4	0.81	0.87	0.89	110
		1780	404/5T	291	K	8.8	2.7	3.1	28.7	12	26	1188	68.0	1.25	1780	95.4	95.8	96.2	0.70	0.80	0.84	116
		1780	404/5TS	291	K	8.8	2.7	3.1	28.7	12	26	1188	68	1.25	1780	95.4	95.8	96.2	0.7	0.8	0.84	116
		1190	444/5T	435	J	7.6	2.6	3.2	106	27	59	1896	69	1.25	1190	94.5	95.4	95.8	0.6	0.72	0.79	124
		1190	444/5TS	435	J	7.6	2.6	3.2	106	27	59	1896	69	1.25	1190	94.5	95.4	95.8	0.6	0.72	0.79	124
125	93	3580	444/5TS	181	J	8.2	2.3	3.1	31.3	44	97	1680	81	1.25	3580	94.1	95.4	95.8	0.76	0.84	0.87	136
		1785	444/5T	363	H	7.2	2.2	2.8	58.3	38	84	1722	73	1.25	1785	95	95.8	96.2	0.68	0.79	0.84	144
		1785	444/5TS	363	H	7.2	2.2	2.8	58.3	38	84	1722	73	1.25	1785	95	95.8	96.2	0.68	0.79	0.84	144
		1190	444/5T	544	H	7.2	2.4	2.6	114	25	55	1945	69	1.25	1190	95	95.8	95.8	0.62	0.74	0.8	152
		1190	444/5TS	544	H	7.2	2.4	2.6	114	25	55	1945	69	1.25	1190	95	95.8	95.8	0.62	0.74	0.8	152

Continued on next page

Data subject to change without notice.

Valid for lines:

GENERAL PURPOSE - THREE PHASE

TEFC – Foot Mount - Super Premium

Output		Rated Speed (rpm)	Frame	Full Load Torque (ft.lb)	Locked Rotor Current		Locked Rotor Torque Tl/Tn	Break-down Torque Tb/Tn	Inertia J (lb-ft²)	Allowable locked rotor time (s)		Weight (lb)	Sound dB(A)	Service Factor	460 V							
															Rated speed (rpm)	% of full load						Full load current In (A)
																Efficiency			Power Factor			
HP	kW				Code	Il/In				Hot	Cold					50	75	100	50	75	100	
150	110	3580	444/5TS	217	H	7.9	2.6	3.2	38.5	30	66	1863	81	1.25	3580	94.5	95.8	96.2	0.77	0.85	0.88	163
		1785	444/5T	435	K	8.9	2.5	3	78.5	30	66	1951	73	1.25	1785	95.4	96.2	96.5	0.68	0.79	0.84	170
		1785	444/5TS	435	K	8.9	2.5	3	78.5	30	66	1951	73	1.25	1785	95.4	96.2	96.5	0.68	0.79	0.84	170
		1190	447/9T	653	J	7.5	2.6	3.2	154	22	48	2256	69	1.25	1190	95	95.8	96.2	0.62	0.74	0.8	179
		1190	447/9TS	653	J	7.5	2.6	3.2	154	22	48	2256	69	1.25	1190	95	95.8	96.2	0.62	0.74	0.8	179
200	150	3575	445/7TS	290	H	7.3	2.4	2.9	45.8	28	62	2029	81	1.25	3575	95.4	96.2	96.2	0.83	0.88	0.9	217
		1785	447/9T	580	J	7.7	2.8	3	97.5	24	53	2293	75	1.25	1785	95.8	96.5	96.8	0.66	0.77	0.83	234
		1785	447/9TS	580	J	7.7	2.8	3	97.5	24	53	2293	75	1.25	1785	95.8	96.5	96.8	0.66	0.77	0.83	234
		1190	447/9T	871	J	7.5	2.6	3	165	15	33	2326	69	1.25	1190	95.4	95.8	96.2	0.6	0.72	0.8	245
		1190	447/9TS	871	J	7.5	2.6	3	165	15	33	2326	69	1.25	1190	95.4	95.8	96.2	0.6	0.72	0.8	245
250	185	3575	445/7TS	362	H	7.9	2.2	3	51.5	23	51	2183	81	1.25	3575	95.8	96.5	96.5	0.82	0.88	0.9	267
		1785	447/9T	726	H	7.5	2.7	2.9	108	21	46	2536	75	1.25	1785	96.2	96.5	96.8	0.68	0.78	0.84	286
		1785	447/9TS	726	H	7.5	2.7	2.9	108	21	46	2536	75	1.25	1785	96.2	96.5	96.8	0.68	0.78	0.84	286
		1190	586/7T	1088	G	6.4	2.1	2.1	258	50	110	3638	77	1.25	1190	95	95.9	96.3	0.67	0.77	0.81	298

W22 TEFC - Cast Iron - Three Phase - High Efficiency

Valid for lines:

GENERAL PURPOSE - THREE PHASE
TEFC – Foot Mount - High Efficiency
TEFC – C-Flange – Foot Mount - High Efficiency
TEFC – C-Flange – Footless - High Efficiency

CLOSE-COUPLE PUMP - THREE PHASE - TYPE JM & JP
TEFC – Three Phase - High Efficiency

Output		Rated Speed (rpm)	Frame	Full Load Torque (ft.lb)	Locked Rotor Current		Locked Rotor Torque Tl/Tn	Break-down Torque Tb/Tn	Inertia J (lb-ft²)	Allowable locked rotor time (s)		Weight (lb)	Sound dB(A)	Service Factor	460 V							
															Rated speed (rpm)	% of full load						Full load current In (A)
																Efficiency			Power Factor			
HP	kW				Code	II/In				Hot	Cold					50	75	100	50	75	100	
1	0.75	860	182T	6.02	K	5.0	2.0	2.6	0.3481	49	108	88.2	50.0	1.25	860	68.0	72.0	74.0	0.41	0.52	0.62	2.05
		860	182/4T	6.02	K	5.0	2.0	2.6	0.3481	49	108	88.2	50.0	1.25	860	68.0	72.0	74.0	0.41	0.52	0.62	2.05
1.5	1.1	865	182/4T	8.98	H	4.7	2.0	2.4	0.3918	37	81	94.8	50.0	1.25	865	74.0	75.5	77.0	0.44	0.58	0.66	2.72
2	1.5	870	213T	11.9	L	6.6	2.4	2.9	1.19	43	95	141	52.0	1.25	870	78.5	81.5	82.5	0.47	0.53	0.66	3.46
3	2.2	865	213/5T	18.0	K	7.1	2.0	2.1	2.02	30	66	159	52.0	1.25	865	82.5	84.0	84.0	0.59	0.70	0.76	4.33
5	3.7	880	254T	29.4	H	5.5	2.0	2.6	2.90	33	73	243	54.0	1.25	880	82.5	84.0	85.5	0.48	0.61	0.70	7.76
		880	254/6T	29.4	H	5.5	2.0	2.6	2.90	33	73	243	54.0	1.25	880	82.5	84.0	85.5	0.48	0.61	0.70	7.76
7.5	5.5	880	254/6T	44.2	H	5.5	2.0	2.6	3.41	25	55	276	54.0	1.25	880	82.5	85.5	85.5	0.48	0.62	0.70	11.5
		880	256T	44.2	H	5.5	2.0	2.6	3.41	25	55	276	54.0	1.25	880	82.5	85.5	85.5	0.48	0.62	0.70	11.5
10	7.5	880	284T	58.9	G	5.7	2.0	2.2	7.20	30	66	373	54.0	1.25	880	87.5	88.5	88.5	0.67	0.77	0.82	13.0
		880	284TS	58.9	G	5.7	2.0	2.2	7.20	30	66	373	54.0	1.25	880	87.5	88.5	88.5	0.67	0.77	0.82	13.0
15	11	880	286T	88.3	G	5.7	2.0	2.2	8.18	22	48	417	54.0	1.25	880	87.5	88.5	88.5	0.68	0.78	0.82	19.0
		880	284/6T	88.3	G	5.7	2.0	2.2	8.18	22	48	417	54.0	1.25	880	87.5	88.5	88.5	0.68	0.78	0.82	19.0
		880	284/6TS	88.3	G	5.7	2.0	2.2	8.18	22	48	417	54.0	1.25	880	87.5	88.5	88.5	0.68	0.78	0.82	19.0
20	15	880	324T	118	G	5	2	2.2	9.79	24	53	452	56	1.25	880	87.5	89.5	89.5	0.55	0.67	0.74	28.4
		880	324TS	118	G	5	2	2.2	9.79	24	53	452	56	1.25	880	87.5	89.5	89.5	0.55	0.67	0.74	28.4
		880	326TS	118	G	5	2	2.2	9.79	24	53	452	56	1.25	880	87.5	89.5	89.5	0.55	0.67	0.74	28.4
		880	324/6T	118	G	5	2	2.2	9.79	24	53	452	56	1.25	880	87.5	89.5	89.5	0.55	0.67	0.74	28.4
25	18.5	880	326T	147	G	5.1	2.2	2.3	11.9	19	42	509	56	1.25	880	87.5	89.5	89.5	0.53	0.66	0.73	35.5
		880	326TS	147	G	5.1	2.2	2.3	11.9	19	42	509	56	1.25	880	87.5	89.5	89.5	0.53	0.66	0.73	35.5
		880	324/6T	147	G	5.1	2.2	2.3	11.9	19	42	509	56	1.25	880	87.5	89.5	89.5	0.53	0.66	0.73	35.5
30	22	880	364/5T	177	G	6	1.6	2.2	23.5	17	37	776	60	1.25	880	91	91.7	91	0.67	0.77	0.82	37
		880	364/5TS	177	G	6	1.6	2.2	23.5	17	37	776	60	1.25	880	91	91.7	91	0.67	0.77	0.82	37
40	30	880	364/5T	235	G	6	1.7	2.2	29	13	29	831	60	1.25	880	91	91.7	91	0.67	0.77	0.82	50.5
		880	364/5TS	235	G	6	1.7	2.2	29	13	29	831	60	1.25	880	91	91.7	91	0.67	0.77	0.82	50.5
		880	404/5T	235	G	6	1.7	2.3	29	15	33	933	60	1.25	880	91	91.7	91	0.69	0.79	0.83	49.9
		880	404/5TS	235	G	6	1.7	2.3	29	15	33	933	60	1.25	880	91	91.7	91	0.69	0.79	0.83	49.9
50	37	875	404/5T	296	G	6.2	1.7	2.4	34.6	12	26	992	60	1.25	875	91.7	91.7	91.7	0.7	0.79	0.83	61
		875	404/5TS	296	G	6.2	1.7	2.4	34.6	12	26	992	60	1.25	875	91.7	91.7	91.7	0.7	0.79	0.83	61
60	45	880	404/5T	353	G	6.3	1.8	2.5	36.9	11	24	1047	60	1.25	880	91.7	92.4	91.7	0.7	0.8	0.83	74.2
		880	404/5TS	353	G	6.3	1.8	2.5	36.9	11	24	1047	60	1.25	880	91.7	92.4	91.7	0.7	0.8	0.83	74.2

Continued on next page

Data subject to change without notice.

Valid for lines:

GENERAL PURPOSE - THREE PHASE
TEFC – Foot Mount - High Efficiency
TEFC – C-Flange – Foot Mount - High Efficiency
TEFC – C-Flange – Footless - High Efficiency

CLOSE-COUPLE PUMP - THREE PHASE - TYPE JM & JP
TEFC – Three Phase - High Efficiency

Output		Rated Speed (rpm)	Frame	Full Load Torque (ft.lb)	Locked Rotor Current		Locked Rotor Torque Tl/Tn	Break-down Torque Tb/Tn	Inertia J (lb-ft²)	Allowable locked rotor time (s)		Weight (lb)	Sound dB(A)	Service Factor	460 V							
															Rated speed (rpm)	% of full load						Full load current In (A)
																Efficiency			Power Factor			
HP	kW				Code	II/In				Hot	Cold					50	75	100	50	75	100	
75	5	885	444/5T	439	F	5.6	1.7	2	73.6	20	44	1444	63	1.25	885	93	93	93	0.67	0.76	0.8	92.8
		885	444/5TS	439	F	5.6	1.7	2	73.6	20	44	1444	63	1.25	885	93	93	93	0.67	0.76	0.8	92.8
100	75	885	444/5T	585	G	5.7	1.8	2	87.3	18	40	1599	63	1.25	885	93	93.6	93	0.67	0.76	0.8	127
		885	444/5TS	585	G	5.7	1.8	2	87.3	18	40	1599	63	1.25	885	93	93.6	93	0.67	0.76	0.8	127
		885	445/7T	585	G	5.7	1.8	2	87.3	18	40	1643	63	1.25	885	93	93.6	93	0.67	0.76	0.8	127
		885	445/7TS	585	G	5.7	1.8	2	87.3	18	40	1643	63	1.25	885	93	93.6	93	0.67	0.76	0.8	127
125	90	890	504/5T	728	F	5.8	1.8	2	104	23	51	2110	66	1.15	890	93.6	94.1	93.6	0.67	0.76	0.8	151
		890	504/5TS	728	F	5.8	1.8	2	104	23	51	2110	66	1.15	890	93.6	94.1	93.6	0.67	0.76	0.8	151
		885	445/7T	732	F	5.8	1.8	2	104	15	33	1806	63	1.15	885	93.6	94.1	93.6	0.67	0.76	0.8	151
		885	445/7TS	732	F	5.8	1.8	2	104	15	33	1806	63	1.15	885	93.6	94.1	93.6	0.67	0.76	0.8	151
150	110	890	504/5T	873	F	5.8	1.8	2	134	21	46	2293	66	1.15	890	94.1	94.5	94.1	0.68	0.77	0.81	181
		890	504/5TS	873	F	5.8	1.8	2	134	21	46	2293	66	1.15	890	94.1	94.5	94.1	0.68	0.77	0.81	181
		885	445/7T	878	F	5.7	1.7	2	134	15	33	1965	63	1.15	885	94.1	94.1	93.6	0.67	0.76	0.8	184
		885	445/7TS	878	F	5.7	1.7	2	134	15	33	1965	63	1.15	885	94.1	94.1	93.6	0.67	0.76	0.8	184
200	150	895	586/7T	1158	G	6	1.3	2.1	350	40	88	3334	75	1.15	895	95	95	94.5	0.65	0.76	0.8	249
		895	586/7TS	1158	G	6	1.3	2.1	350	40	88	3334	75	1.15	895	95	95	94.5	0.65	0.76	0.8	249
		890	447/9T	1164	G	5.9	1.9	2.1	161	14	31	2430	---	1.15	890	94.1	94.5	94.5	0.65	0.75	0.79	252
		890	447/9TS	1164	G	5.9	1.9	2.1	161	14	31	2430	---	1.15	890	94.1	94.5	94.5	0.65	0.75	0.79	252
250	185	3575	504/5TS	362	F	6.5	1.9	2.4	51.4	20	44	2388	81	1.15	3575	94.5	95.4	95.4	0.85	0.88	0.9	270
		3575	447/9TS	362	F	6.5	1.9	2.4	51.4	20	44	2388	---	1.15	3575	94.5	95.4	95.4	0.85	0.88	0.9	270
		3570	445/7TS	363	F	6.5	2.2	2.2	51.4	18	40	2159	81	1.15	3570	95	95.4	95.4	0.87	0.89	0.9	270
		1785	504/5T	726	G	6.4	2.1	2.1	89.6	21	46	2337	75	1.15	1785	95	95.4	95.4	0.77	0.84	0.86	283
		1785	504/5TS	726	G	6.4	2.1	2.1	89.6	21	46	2337	75	1.15	1785	95	95.4	95.4	0.77	0.84	0.86	283
		1780	445/7T	728	G	6.4	2.2	2.2	89.6	16	35	2033	---	1.15	1780	95	95.4	95.4	0.78	0.84	0.86	283
		1780	445/7TS	728	G	6.4	2.2	2.2	89.6	16	35	2033	---	1.15	1780	95	95.4	95.4	0.78	0.84	0.86	283
		1780	447/9T	728	G	6.4	2.2	2.2	89.6	16	35	2033	---	1.15	1780	95	95.4	95.4	0.78	0.84	0.86	283
		1780	447/9TS	728	G	6.4	2.2	2.2	89.6	16	35	2033	---	1.15	1780	95	95.4	95.4	0.78	0.84	0.86	283
		1190	586/7T	1088	G	6.1	2	2.1	226	30	66	3206	77	1.15	1190	95	95.4	95	0.69	0.78	0.82	298
		1190	586/7TS	1088	G	6.1	2	2.1	226	30	66	3206	77	1.15	1190	95	95.4	95	0.69	0.78	0.82	298
		1185	447/9T	1093	G	6.2	2.2	2.2	153	11	24	2452	---	1.15	1185	95	95.4	95	0.71	0.8	0.84	291
		1185	447/9TS	1093	G	6.2	2.2	2.2	153	11	24	2452	---	1.15	1185	95	95.4	95	0.71	0.8	0.84	291
		895	586/7T	1447	G	6	1.3	2.1	387	40	88	3649	75	1.15	895	95	95.4	95	0.67	0.77	0.81	302
		895	586/7TS	1447	G	6	1.3	2.1	387	40	88	3649	75	1.15	895	95	95.4	95	0.67	0.77	0.81	302

Continued on next page

W22 TEFC - Cast Iron - Three Phase - High Efficiency continued

Valid for lines:

GENERAL PURPOSE - THREE PHASE
TEFC – Foot Mount - High Efficiency
TEFC – C-Flange – Foot Mount - High Efficiency
TEFC – C-Flange – Footless - High Efficiency

CLOSE-COUPLE PUMP - THREE PHASE - TYPE JM & JP
TEFC – Three Phase - High Efficiency

Output		Rated Speed (rpm)	Frame	Full Load Torque (ft.lb)	Locked Rotor Current		Locked Rotor Torque Tl/Tn	Break-down Torque Tb/Tn	Inertia J (lb-ft²)	Allowable locked rotor time (s)		Weight (lb)	Sound dB(A)	Service Factor	460 V							
															Rated speed (rpm)	% of full load						Full load current In (A)
																Efficiency			Power Factor			
HP	kW				Code	Il/In				Hot	Cold					50	75	100	50	75	100	
300	220	3580	586/7TS	434	F	6.5	1.6	2.2	123	30	66	3382	84	1.15	3580	95	95.4	95.4	0.87	0.9	0.91	318
		3575	447/9TS	435	F	6.5	2.5	2.4	58.1	14	31	2545	---	1.15	3575	95.4	95.4	95.4	0.86	0.89	0.9	322
		1790	586/7T	868	G	6.4	1.9	2.2	163	20	44	2961	81	1.15	1790	95	95.4	95.8	0.76	0.83	0.85	339
		1790	586/7TS	868	G	6.4	1.9	2.2	163	20	44	2961	81	1.15	1790	95	95.4	95.8	0.76	0.83	0.85	339
		1780	447/9T	873	G	6.5	2.3	2.3	105	14	31	2375	---	1.15	1780	95.4	95.8	95.4	0.76	0.84	0.86	337
		1780	447/9TS	873	G	6.5	2.3	2.3	105	14	31	2375	---	1.15	1780	95.4	95.8	95.4	0.76	0.84	0.86	337
		1190	586/7T	1306	G	6	2	2	277	30	66	3495	77	1.15	1190	95	95.4	95.4	0.69	0.78	0.81	357
		1190	586/7TS	1306	G	6	2	2	277	30	66	3495	77	1.15	1190	95	95.4	95.4	0.69	0.78	0.81	357
		1185	447/9T	1312	H	6.9	2.4	2.4	169	10	22	2613	---	1.15	1185	95	95.4	95	0.69	0.79	0.83	350
		1185	447/9TS	1312	H	6.9	2.4	2.4	169	10	22	2613	---	1.15	1185	95	95.4	95	0.69	0.79	0.83	350
		895	586/7T	1737	G	6.4	1.5	2.2	462	40	88	4035	75	1.15	895	95	95.4	95	0.66	0.77	0.81	359
		895	586/7TS	1737	G	6.4	1.5	2.2	462	40	88	4035	75	1.15	895	95	95.4	95	0.66	0.77	0.81	359
350	260	3580	586/7TS	507	F	6.5	1.6	2.4	136	25	55	3621	84	1.15	3580	95.4	95.8	95.8	0.87	0.9	0.91	374
		3575	447/9TS	507	J	8.5	2.5	2.6	68.1	10	22	2701	---	1.15	3575	95.4	95.8	95.8	0.85	0.89	0.9	378
		1785	586/7T	1016	G	6.3	1.9	2	179	22	48	3213	81	1.15	1785	95.4	95.8	95.8	0.77	0.84	0.86	396
		1785	586/7TS	1016	G	6.3	1.9	2	179	22	48	3213	81	1.15	1785	95.4	95.8	95.8	0.77	0.84	0.86	396
		1780	447/9T	1019	G	6.4	2.1	2.2	118	16	35	2644	---	1.15	1780	95.4	95.8	95.8	0.76	0.84	0.86	396
		1780	447/9TS	1019	G	6.4	2.1	2.2	118	16	35	2644	---	1.15	1780	95.4	95.8	95.8	0.76	0.84	0.86	396
		1190	586/7T	1524	G	6.1	1.8	2.1	328	29	64	3784	77	1.15	1190	95	95.4	95.4	0.66	0.77	0.81	422
		1190	586/7TS	1524	G	6.1	1.8	2.1	328	29	64	3784	77	1.15	1190	95	95.4	95.4	0.66	0.77	0.81	422
		895	586/7T	2026	H	6.7	1.5	2.3	484	34	75	4309	75	1	895	95	95.4	95	0.64	0.75	0.8	429
		895	586/7TS	2026	H	6.7	1.5	2.3	484	34	75	4309	75	1	895	95	95.4	95	0.64	0.75	0.8	429
400	300	3580	586/7TS	579	F	6.5	1.8	2.2	122	48	106	3749	84	1.15	3580	95.4	95.8	95.8	0.88	0.9	0.91	432
		1790	586/7T	1158	G	6.4	2	2.2	179	19	42	3455	81	1.15	1790	95.4	95.8	95.8	0.77	0.84	0.86	457
		1790	586/7TS	1158	G	6.4	2	2.2	179	19	42	3455	81	1.15	1790	95.4	95.8	95.8	0.77	0.84	0.86	457
		1190	586/7T	1741	G	6.1	2.2	2.1	368	29	64	4115	77	1.15	1190	95	95.4	95.4	0.67	0.77	0.81	487
		1190	586/7TS	1741	G	6.1	2.2	2.1	368	29	64	4115	77	1.15	1190	95	95.4	95.4	0.67	0.77	0.81	487
450	330	3580	586/7TS	651	F	6.6	2	2.3	132	36	79	3918	84	1.15	3580	95.4	95.8	95.8	0.88	0.9	0.91	475
		1790	586/7T	1302	G	6.4	2.1	2.1	213	17	37	3455	81	1.15	1790	95.4	95.8	95.8	0.77	0.84	0.86	503
		1790	586/7TS	1302	G	6.4	2.1	2.1	213	17	37	3455	81	1.15	1790	95.4	95.8	95.8	0.77	0.84	0.86	503
		1190	586/7T	1959	G	6.1	2.1	2.1	368	26	57	4384	77	1	1190	95	95.4	95.4	0.67	0.77	0.81	536
		1190	586/7TS	1959	G	6.1	2.1	2.1	368	26	57	4384	77	1	1190	95	95.4	95.4	0.67	0.77	0.81	536

Continued on next page

Data subject to change without notice.

W22 TEFC - Cast Iron - Three Phase - High Efficiency continued

Valid for lines:

GENERAL PURPOSE - THREE PHASE
TEFC – Foot Mount - High Efficiency
TEFC – C-Flange – Foot Mount - High Efficiency
TEFC – C-Flange – Footless - High Efficiency

CLOSE-COUPLE PUMP - THREE PHASE - TYPE JM & JP
TEFC – Three Phase - High Efficiency

Output		Rated Speed (rpm)	Frame	Full Load Torque (ft.lb)	Locked Rotor Current		Locked Rotor Torque Tl/Tn	Break-down Torque Tb/Tn	Inertia J (lb-ft²)	Allowable locked rotor time (s)		Weight (lb)	Sound dB(A)	Service Factor	460 V							
															Rated speed (rpm)	% of full load						
																Efficiency			Power Factor			Full load current In (A)
HP	kW				Code	Il/In				Hot	Cold					50	75	100	50	75	100	
500	370	3580	586/7TS	724	G	6.8	2.2	2.4	143	39	86	4086	84	1.15	3580	95.4	95.8	95.8	0.88	0.9	0.91	533
		1790	586/7T	1447	G	6.4	2.1	2	256	16	35	3912	81	1.15	1790	95.4	95.8	95.8	0.79	0.85	0.86	564
		1790	586/7TS	1447	G	6.4	2.1	2	256	16	35	3912	81	1.15	1790	95.4	95.8	95.8	0.79	0.85	0.86	564
		1190	586/7T	2177	G	6.3	2.2	2.1	368	25	55	4403	77	1	1190	95.4	95.8	95.8	0.66	0.76	0.8	606
		1190	586/7TS	2177	G	6.3	2.2	2.1	368	25	55	4403	77	1	1190	95.4	95.8	95.8	0.66	0.76	0.8	606
600	440	1790	586/7	1737	G	7.1	2.2	2.5	236	16	35	4335	81	1	1790	96.2	96.4	96.5	0.74	0.82	0.86	665

W21 TEFC - Cast Iron - Three Phase - High Efficiency

Valid for lines:

BRAKE MOTORS – Three-Phase
TEFC - Foot Mount
TEFC - C-Face - Foot Mount

PAD MOUNT MOTORS – THREE PHASE
TEAO - High Efficiency

P-BASE MOTORS
TEFC - Three Phase - High Efficiency

Output		Rated Speed (rpm)	Frame	Full Load Torque (ft.lb)	Locked Rotor Current		Locked Rotor Torque Tl/Tn	Break-down Torque Tb/Tn	Inertia J (lb-ft²)	Allowable locked rotor time (s)		Weight (lb)	Sound dB(A)	Service Factor	460 V							
															Rated speed (rpm)	% of full load						Full load current In (A)
																Efficiency			Power Factor			
HP	kW				Code	Il/In				Hot	Cold					50	75	100	50	75	100	
1	0.75	3490	143T	1.48	L	8.2	3	4	0.0304	15	33	37.3	68	1.25	3490	72	77	78.5	0.64	0.75	0.81	1.48
		3490	145T	1.48	L	8.2	3	4	0.0304	15	33	39.7	68	1.25	3490	72	77	78.5	0.64	0.75	0.81	1.48
		1765	143T	2.94	M	8.6	2.9	4	0.093	16	35	39.7	51	1.25	1765	77	80	82.5	0.55	0.69	0.77	1.48
		1155	145T	4.49	L	6.8	2.6	3	0.1329	22	48	44.1	49	1.25	1155	75.5	80	80	0.48	0.6	0.69	1.7
		875	182T	5.92	M	6	3	3.5	0.3991	40	88	76.4	50	1.25	875	68	72	74	0.35	0.45	0.55	2.31
1.5	1.1	3480	143T	2.23	L	8.5	3	4	0.0361	15	33	39.3	68	1.25	3480	78.5	81.5	82.5	0.64	0.74	0.81	2.07
		1760	145T	4.42	L	8.5	2.7	3.7	0.1196	13	29	45.6	51	1.25	1760	80	84	84	0.6	0.72	0.8	2.05
		1165	182T	6.67	L	7.5	2.9	3.6	0.3991	36	79	119	52	1.25	1165	81.5	84	85.5	0.47	0.58	0.68	2.37
		860	184T	9.04	J	5.5	2.5	2.6	0.4438	32	70	85.8	50	1.25	860	74	75.5	77	0.47	0.58	0.66	2.72
2	1.5	3480	145T	2.98	L	9.4	2.8	4	0.0489	12	26	42.8	68	1.25	3480	80	82.5	84	0.7	0.81	0.86	2.6
		1760	182T	5.89	K	7.7	2.4	3	0.1329	11	24	52.9	56	1.25	1760	82.5	85.5	86.5	0.59	0.71	0.78	2.79
		1750	145T	5.92	K	7.7	2.4	3	0.1329	11	24	47.8	51	1.25	1750	81.5	84	84	0.62	0.74	0.81	2.77
		1165	184T	8.89	L	7.5	3	3	0.5323	35	77	123	52	1.25	1165	84	85.5	86.5	0.48	0.6	0.68	3.2
		870	213T	11.9	L	6.6	2.4	2.9	1.19	43	95	141	52	1.25	870	78.5	81.5	82.5	0.47	0.53	0.66	3.46
3	2.2	3500	182T	4.44	K	8.2	2.5	4	0.1725	23	51	97	69	1.25	3500	80	84	85.5	0.74	0.83	0.87	3.71
		3495	W182/4T	4.45	K	8.9	2.8	3.3	0.1597	20	44	77.2	61	1.25	3495	84.5	85.5	85.5	0.77	0.85	0.88	3.67
		1760	182T	8.83	K	7.5	2.3	3.2	0.2772	25	55	91.4	56	1.25	1760	85.5	87.5	87.5	0.59	0.71	0.78	4.05
		1740	W182/4T	8.93	L	8.5	3.6	4	0.2181	12	26	75	54	1.15	1740	85.5	87.5	87.5	0.55	0.67	0.76	4.15
		1170	213T	13.3	J	7	2.3	2.5	1.01	59	130	126	55	1.25	1170	86.5	87.5	87.5	0.51	0.63	0.72	4.26
		865	215T	18	K	7.1	2	2.1	2.02	30	66	164	52	1.25	865	82.5	84	84	0.59	0.7	0.76	4.33
5	3.7	3480	184T	7.44	J	7.7	2.3	3.3	0.1998	23	51	105	69	1.25	3480	84	86.5	87.5	0.8	0.86	0.9	5.9
		3480	W182/4T	7.44	K	8.7	3	3.3	0.173	12	26	94	71	1.25	3480	86.5	87.5	87.5	0.71	0.81	0.87	6.1
		1750	184T	14.8	J	7	2.1	3	0.3389	18	40	102	56	1.25	1750	85.5	87.5	87.5	0.63	0.75	0.81	6.55
		1730	W182/4T	15	K	8.1	3.2	3.9	0.2634	8	18	82.5	54	1.15	1730	85.5	87.5	87.5	0.57	0.7	0.78	6.8
		1165	215T	22.2	J	6.4	2.1	2.3	1.47	35	77	158	55	1.25	1165	86.5	87.5	87.5	0.55	0.67	0.75	7.08
		875	254T	29.6	H	5.3	2	2.8	2.9	37	81	237	54	1.25	875	82.1	85	85.5	0.47	0.6	0.68	7.99
7.5	5.5	3515	213T	11.1	H	7.1	2.2	3.5	0.4879	26	57	134	72	1.25	3515	85.5	87.5	88.5	0.8	0.87	0.9	8.67
		3460	184T	11.2	H	7	2.2	2.3	0.2361	15	33	101	69	1.25	3460	85.5	87.5	88.5	0.79	0.85	0.87	8.76
		1765	213T	22	H	6.4	2	2.6	0.98	21	46	130	58	1.25	1765	87.5	89.5	89.5	0.64	0.75	0.81	9.52
		1170	254T	33.2	H	6.8	2.3	3.1	2.56	29	64	225	59	1.25	1170	88.5	89.5	89.5	0.62	0.74	0.81	9.52
		875	256T	44.4	G	5.2	1.9	2.7	3.41	41	90	265	54	1.25	875	83.4	85.9	86.5	0.51	0.63	0.71	11.2
10	7.5	3500	215T	14.8	H	6.9	2.2	2.8	0.5766	20	44	152	72	1.25	3500	88.5	89.5	89.5	0.81	0.88	0.9	11.7
		1760	215T	29.4	H	6.3	2	2.5	1.25	15	33	160	58	1.25	1760	89.5	90.2	89.5	0.65	0.77	0.82	12.8
		1175	256T	44.1	J	6.9	2.3	2.9	2.9	22	48	246	59	1.25	1175	88.5	89.5	89.5	0.58	0.72	0.79	13.3
		885	284T	58.5	H	6	2.5	2.4	7.2	54	119	387	54	1.25	885	86.5	88.5	88.5	0.6	0.72	0.78	13.6

Continued on next page

Data subject to change without notice.

W21 TEFC - Cast Iron - Three Phase - High Efficiency continued

Valid for lines:

BRAKE MOTORS – Three-Phase
TEFC - Foot Mount
TEFC - C-Face - Foot Mount

PAD MOUNT MOTORS – THREE PHASE
TEAO - High Efficiency

P-BASE MOTORS
TEFC - Three Phase - High Efficiency

Output		Rated Speed (rpm)	Frame	Full Load Torque (ft.lb)	Locked Rotor Current		Locked Rotor Torque Tl/Tn	Break-down Torque Tb/Tn	Inertia J (lb-ft²)	Allowable locked rotor time (s)		Weight (lb)	Sound dB(A)	Service Factor	460 V							
															Rated speed (rpm)	% of full load					Full load current In (A)
																Efficiency			Power Factor		
HP	kW				Code	Il/In				Hot	Cold					50	75	100	50	75	100	
15	11	3530	254T	22	G	6.5	2	2.7	1.07	28	62	256	75	1.25	3530	88.5	90.2	90.2	0.81	0.87	0.9	17
		3500	215T	22.2	F	6.1	2	2.2	0.6654	10	22	161	72	1.15	3500	89	90.2	90.2	0.8	0.87	0.89	17.2
		1760	254T	44.2	G	6.4	2.5	2.5	2.19	23	51	263	69	1.25	1760	90.2	91	91	0.66	0.76	0.82	18.1
		1180	284T	65.9	G	6.6	2.3	2.5	7.2	21	46	392	59	1.25	1180	90.2	91	91	0.73	0.82	0.86	17.6
		880	286T	88.3	G	6.1	2.4	2.3	8.18	37	81	433	54	1.25	880	86.5	88.5	88.5	0.68	0.78	0.82	19
20	15	3515	256T	29.5	G	6.2	1.9	2.5	1.13	15	33	291	75	1.25	3515	89.5	90.2	90.2	0.81	0.87	0.89	23.5
		1760	284T	58.9	F	5.6	2.1	2.2	5.11	41	90	397	68	1.25	1760	90.2	91	91.7	0.73	0.82	0.86	23.9
		1755	256T	59	G	5.8	2.4	2.5	2.86	15	33	298	69	1.25	1755	91	91.7	91	0.7	0.8	0.84	24.6
		1175	286T	88.2	G	6.1	2.3	2.5	8.18	25	55	439	59	1.25	1175	90.2	91	91	0.75	0.83	0.86	24.1
		880	324T	118	G	5.3	2.2	2.2	9.79	34	75	489	56	1.25	880	87.5	89.5	89.5	0.56	0.68	0.75	28
		880	326T	118	G	5.3	2.2	2.2	9.79	34	75	499	56	1.25	880	87.5	89.5	89.5	0.56	0.68	0.75	28
25	18.5	3525	284TS	36.7	G	6.2	2	2.5	2.29	23	51	356	75	1.25	3525	90.2	91	91	0.84	0.87	0.88	29
		1760	284T	73.6	G	6.1	2.3	2.5	4.75	30	66	414	68	1.25	1760	92.4	92.4	92.4	0.74	0.82	0.85	29.6
		1760	286T	73.6	G	6.1	2.3	2.5	4.75	30	66	397	68	1.25	1760	92.4	92.4	92.4	0.74	0.82	0.85	29.6
		1175	324T	110	G	5.9	2.2	2.4	10.2	20	44	517	62	1.25	1175	91	91.7	91.7	0.66	0.78	0.83	30.5
		880	326T	147	G	5.1	2.4	2.4	11.9	29	64	570	56	1.25	880	87.5	88.5	89.5	0.53	0.65	0.73	35.5
30	22	3520	286TS	44.2	G	6.4	1.9	2.3	2.83	19	42	414	75	1.25	3520	90.2	91	91	0.84	0.88	0.9	33.7
		1770	324T	87.8	F	6	2	2.2	6.91	25	55	485	71	1.25	1770	92.4	93	93	0.75	0.84	0.86	34.5
		1760	286T	88.3	G	6.2	2.4	2.6	4.85	22	48	441	68	1.25	1760	93	93	92.4	0.75	0.83	0.86	34.7
		1175	326T	132	G	6	2.2	2.5	11.9	20	44	570	62	1.25	1175	91	91.7	91.7	0.69	0.79	0.84	35.8
		885	364/5T	176	G	5.7	2.2	2.2	23.5	48	106	786	62	1.25	885	89.5	91	91	0.66	0.75	0.79	38.4
40	30	3550	324TS	58.4	G	6.3	2.3	2.4	4.42	36	79	532	81	1.25	3550	91	91.7	91.7	0.82	0.87	0.89	46.1
		3550	326TS	58.4	G	6.3	2.3	2.4	4.42	36	79	516	81	1.25	3550	91	91.7	91.7	0.82	0.87	0.89	46.1
		1770	324T	117	G	6	2.3	2.3	6.91	25	55	534	71	1.25	1770	92.4	93	93	0.73	0.82	0.85	47.6
		1770	324TS	117	G	6	2.3	2.3	6.91	25	55	483	71	1.25	1770	92.4	93	93	0.73	0.82	0.85	47.6
		1180	364T	176	G	6.2	2.3	2.3	23.5	25	55	784	65	1.25	1180	92.4	93	93	0.73	0.81	0.85	47.6
		885	364/5T	234	G	5.6	2.2	2.2	29	42	92	871	62	1.25	885	89.5	91	91	0.66	0.75	0.79	52.4
		885	404/5T	234	G	5.6	2.2	2.2	29	42	92	953	62	1.25	885	89.5	91	91	0.66	0.75	0.79	52.4
50	37	3555	326TS	72.9	G	6.5	2.3	2.3	5.32	33	73	570	81	1.25	3555	91	92.4	92.4	0.83	0.88	0.89	56.5
		1775	364/5T	146	G	6.4	2	2.3	0	23	51	853	75	1.25	1775	93	93.6	93.6	0.8	0.87	0.9	55.1
		1770	326T	146	G	6.1	2.3	2.4	8.17	22	48	593	71	1.25	1770	93	93.6	93	0.72	0.81	0.85	58.7
		1180	364/5T	220	G	6.3	2.3	2.5	29	30	66	866	65	1.25	1180	92.4	93	93	0.74	0.82	0.86	58.1
		885	404/5T	293	G	5.6	2.2	2.1	34.6	27	59	1001	62	1.25	885	90.2	91.7	91.7	0.69	0.75	0.78	64.9

Continued on next page

W21 TEFC - Cast Iron - Three Phase - High Efficiency continued

Valid for lines:

BRAKE MOTORS – Three-Phase
TEFC - Foot Mount
TEFC - C-Face - Foot Mount

PAD MOUNT MOTORS – THREE PHASE
TEAO - High Efficiency

P-BASE MOTORS
TEFC - Three Phase - High Efficiency

Output		Rated Speed (rpm)	Frame	Full Load Torque (ft.lb)	Locked Rotor Current		Locked Rotor Torque Tl/Tn	Break-down Torque Tb/Tn	Inertia J (lb-ft²)	Allowable locked rotor time (s)		Weight (lb)	Sound dB(A)	Service Factor	460 V							
																% of full load						
																Efficiency			Power Factor			
HP	kW				Code	Il/In				Hot	Cold				Rated speed (rpm)	50	75	100	50	75	100	Full load current In (A)
60	45	3555	364/5TS	87.4	G	6.3	2	2.5	8.51	61	134	807	85	1.25	3555	91	92.4	93	0.8	0.87	0.88	69
		1775	364/5T	175	G	6.4	2.1	2.5	15.2	20	44	816	75	1.25	1775	93	93.6	93.6	0.76	0.84	0.88	68.6
		1180	404/5T	263	G	6.3	2.5	2.5	34.6	32	70	1035	65	1.25	1180	93	93.6	93.6	0.74	0.83	0.86	70.2
		885	404/5T	351	G	5.8	1.7	2.1	36.9	13	29	1063	62	1.25	885	91	91.7	91.7	0.7	0.76	0.8	77
75	55	3550	364/5TS	109	G	6.5	2	2.6	9.56	18	40	880	85	1.25	3550	92.4	93	93	0.83	0.89	0.9	82.5
		1775	364/5T	219	G	6.5	2.2	2.4	18.3	22	48	882	75	1.25	1775	94.1	94.1	94.1	0.79	0.86	0.88	83.4
		1180	404/5T	329	G	6.3	2.5	2.6	36.9	23	51	1067	65	1.25	1180	93	93.6	93.6	0.74	0.82	0.85	86.8
		890	444/5T	437	G	6.1	1.7	2.1	73.6	28	62	1484	64	1.25	890	91.7	92.4	93	0.66	0.76	0.8	92.8
100	75	3550	404/5TS	146	G	6.4	2	2.4	11.9	38	84	1003	85	1.25	3550	91.7	93.6	93.6	0.84	0.88	0.89	113
		1780	444/5T	291	G	6	1.8	2	43.8	31	68	1407	76	1.25	1780	94	94.5	94.5	0.76	0.83	0.85	117
		1775	404/5T	292	G	6.3	2.1	2.2	27.4	18	40	1096	75	1.25	1775	93.6	94.5	94.5	0.8	0.86	0.87	114
		1185	444/5T	437	G	6	2.2	2.6	73.6	25	55	1544	70	1.25	1185	93.6	94.1	94.1	0.68	0.79	0.83	121
		890	444/5T	582	G	6.1	1.7	2	87.3	29	64	1674	64	1.25	890	92.4	93	93	0.69	0.78	0.81	125
125	90	3560	444/5TS	182	G	6.6	2	2.5	27.9	40	88	1517	86	1.15	3560	92.4	94.1	94.5	0.84	0.9	0.91	136
		1780	444/5T	364	G	6.4	2	2.2	45.7	27	59	1493	76	1.15	1780	93.6	94.5	94.5	0.77	0.84	0.87	142
		1185	444/5T	547	G	6.3	2.1	2.3	87.3	22	48	1699	70	1.15	1185	93.6	94.1	94.1	0.7	0.8	0.84	148
		890	447T	728	G	6.1	1.7	2	104	21	46	2044	66	1.15	890	93	93.6	93.6	0.68	0.77	0.81	154
		890	504/5T	728	G	6.1	1.7	2	104	21	46	1968	66	1.15	890	93	93.6	93.6	0.68	0.77	0.81	154
150	110	3575	444/5TS	217	G	6.7	2	2.5	33.5	38	84	1649	86	1.15	3575	93	94.1	94.5	0.83	0.88	0.91	160
		1780	444/5T	437	G	6.4	2.2	2.3	57.2	27	59	1662	76	1.15	1780	94.1	95	95	0.78	0.84	0.87	167
		1185	447T	656	G	6.2	2.2	2.4	109	23	51	1969	73	1.15	1185	94.5	95	95	0.71	0.8	0.84	173
		1185	504/5T	656	G	6.2	2.2	2.4	109	23	51	1973	73	1.15	1185	94.5	95	95	0.71	0.8	0.84	173
		890	447T	873	G	6	1.7	2	134	23	51	2273	66	1.15	890	93	93.6	93.6	0.71	0.79	0.83	178
		890	504/5T	873	G	6	1.7	2	134	23	51	2279	66	1.15	890	93	93.6	93.6	0.71	0.79	0.83	178

Data subject to change without notice.

Valid for lines:

SINGLE PHASE GENERAL PURPOSE

TEFC – Foot Mount
TEFC – C-Face - Foot Mount
TEFC – C-Face - Footless
TEFC-FootMount-ThermallyProtected

COMMERCIAL HVAC MOTORS

TEFC - Single-Phase - Foot Mount
TEAO-Single-Phase-ResilientBase
TEAO - Single-Phase - Foot Mount

Output		Rated Speed (rpm)	Frame	Full Load Torque (ft.lb)	Locked Rotor Current		Locked Rotor Torque Tl/Tn	Break-down Torque Tb/Tn	Inertia J (lb-ft²)	Allowable locked rotor time (s)		Weight (lb)	Sound dB(A)	Service Factor	115 V							
															Rated speed (rpm)	% of full load					Full load current In (A)
																Efficiency			Power Factor		
HP	kW				Code	Il/In				Hot	Cold					50	75	100	50	75	100	
0.16	0.12	1740	B56	0.480	U	5.5	2.5	2.5	0.0446	10	22	20.3	---	1.15	1740	50.5	57.5	59.5	0.50	0.58	0.66	5.20
		3480	B56	0.370	N	5.6	2.8	2.9	0.0237	6	13	21.6	---	1.15	3480	36.0	45.0	50.0	0.56	0.64	0.70	4.60
		3480	B56	0.370	M	5.3	2.7	2.6	0.0237	6	13	0.0	---	1.15	3480	47.0	55.0	50.0	0.59	0.67	0.73	4.40
0.25	0.18	3480	B56	0.370	N	5.6	2.8	2.9	0.0237	6	13	21.6	---	1.15	3480	36.0	45.0	50.0	0.56	0.64	0.70	4.60
		1750	B56	0.740	N	5.5	3.6	2.8	0.0536	6	13	20.3	---	1.15	1750	44.5	53.5	58.0	0.43	0.52	0.59	4.69
		1750	B56	0.740	P	5.8	3.6	2.8	0.0536	6	13	20.0	---	1.15	1750	45.0	53.0	57.7	0.41	0.50	0.58	4.70
		3490	B56	0.490	N	5.8	3.7	3.2	0.0278	6	13	22.1	---	1.15	3490	40.0	49.0	53.0	0.56	0.64	0.70	5.70
		3490	B56	0.490	N	5.8	3.7	3.2	0.0278	6	13	21.9	---	1.15	3490	40.0	49.0	53.0	0.56	0.64	0.70	5.70
0.33	0.25	3480	B56	0.490	M	5.6	3.4	2.9	0.0278	6	13	22.1	---	1.15	3480	41.0	50.0	54.0	0.59	0.67	0.73	5.36
		1750	B56	0.980	N	6.0	3.4	3.0	0.0624	6	13	21.8	---	1.15	1750	51.0	59.0	62.5	0.42	0.51	0.59	5.74
		1750	B56	0.980	N	5.8	3.4	2.8	0.0624	6	13	21.8	---	1.15	1750	49.0	58.0	61.0	0.44	0.53	0.62	5.60
		3480	B56	0.740	L	5.6	3.2	2.8	0.0316	6	13	0.0	---	1.15	3480	45.0	52.0	58.0	0.56	0.66	0.73	7.65
		3480	B56	0.740	L	5.6	3.2	2.8	0.0316	6	13	23.4	---	1.15	3480	45.0	52.0	58.0	0.56	0.66	0.73	7.60
		3480	B56	0.740	L	5.6	3.2	2.8	0.0316	6	13	23.4	---	1.15	3480	45.0	52.0	58.0	0.56	0.66	0.73	7.65
		3480	B56	0.740	L	5.6	3.2	2.8	0.0316	6	13	23.4	---	1.15	3480	45.0	52.0	58.0	0.56	0.66	0.73	7.60
0.5	0.37	1750	B56	1.48	M	5.7	3.1	2.9	0.0804	6	13	24.9	---	1.15	1750	55.0	62.5	66.5	0.44	0.54	0.63	7.65
		1750	B56	1.48	M	5.7	3.1	2.9	0.0804	6	13	24.9	---	1.15	1750	55.0	62.5	66.5	0.44	0.54	0.63	7.70
		1750	B56	1.48	L	5.8	2.9	2.7	0.0804	6	13	24.6	---	1.15	1750	56.0	64.0	66.5	0.46	0.57	0.65	7.40
		1180	D56	2.20	L	5.7	2.5	3.0	0.1429	6	13	37.7	---	1.15	1180	58.0	67.0	71.0	0.47	0.55	0.63	7.20
		3490	B56	1.11	M	6.3	3.0	2.9	0.0396	6	13	26.2	---	1.15	3490	52.0	60.0	64.0	0.54	0.64	0.72	10.4
		3490	B56	1.11	M	6.3	3.0	2.9	0.0396	6	13	26.2	---	1.15	3490	52.0	60.0	64.0	0.54	0.64	0.72	10.4
		3480	B56	1.12	L	6.2	2.9	2.7	0.0396	6	13	26.2	---	1.15	3480	54.0	62.0	65.0	0.57	0.66	0.74	9.95
		3480	B56	1.12	L	6.2	2.9	2.7	0.0396	6	13	26.2	---	1.15	3480	54.0	62.0	65.0	0.57	0.66	0.74	9.95
0.75	0.55	1750	B56	2.22	M	6.1	3.5	2.9	0.0982	6	13	27.6	---	1.15	1750	57.0	65.0	68.5	0.43	0.53	0.62	11.3
		1750	B56	2.22	M	6.1	3.5	2.9	0.0982	6	13	27.6	---	1.15	1750	57.0	65.0	68.5	0.43	0.53	0.62	11.3
		1745	B56	2.23	M	6.2	3.0	2.5	0.0982	6	13	27.8	---	1.15	1745	58.5	66.0	68.5	0.47	0.58	0.66	10.6
		1450	D56	2.68	J	5.5	2.7	2.4	0.1160	6	13	32.6	---	1.00	1450	64.5	70.0	71.5	0.56	0.67	0.75	8.99
		1170	F56H	3.32	K	5.4	2.3	2.6	0.1777	6	13	42.0	---	1.15	1170	59.0	67.0	71.0	0.49	0.59	0.68	10.0

Continued on next page

TEFC - Single Phase continued

Valid for lines:

SINGLE PHASE GENERAL PURPOSE

TEFC – Foot Mount
TEFC – C-Face - Foot Mount
TEFC – C-Face - Footless
TEFC-FootMount-ThermallyProtected

COMMERCIAL HVAC MOTORS

TEFC - Single-Phase - Foot Mount
TEAO-Single-Phase-ResilientBase
TEAO - Single-Phase - Foot Mount

Output		Rated Speed (rpm)	Frame	Full Load Torque (ft.lb)	Locked Rotor Current		Locked Rotor Torque Tl/Tn	Break-down Torque Tb/Tn	Inertia J (lb-ft²)	Allowable locked rotor time (s)		Weight (lb)	Sound dB(A)	Service Factor	115V							
															Rated speed (rpm)	% of full load						Full load current In (A)
																Efficiency			Power Factor			
HP	kW				Code	Il/In				Hot	Cold					50	75	100	50	75	100	
1	0.75	3500	D56	1.48	L	6.7	3.0	2.7	0.0515	6	13	32.1	---	1.15	3500	59.0	66.0	69.0	0.58	0.69	0.77	12.1
		3500	D56	1.48	M	7.0	3.2	2.8	0.0515	6	13	32.0	---	1.15	3500	55.0	63.0	67.0	0.56	0.67	0.75	12.8
		3500	D56	1.48	L	6.7	3.0	2.7	0.0515	6	13	32.1	---	1.15	3500	59.0	66.0	69.0	0.58	0.69	0.77	12.1
		3500	D56	1.48	M	7.0	3.2	2.8	0.0515	6	13	32.1	---	1.15	3500	55.0	63.0	67.0	0.56	0.67	0.75	12.8
		3500	F143/5T	1.48	M	7.0	3.2	2.8	0.0515	6	13	32.0	---	1.15	3500	55.0	63.0	67.0	0.56	0.67	0.75	12.8
		1750	D56	2.96	M	6.5	3.2	2.7	0.1338	6	13	33.8	---	1.15	1750	60.0	67.0	70.3	0.45	0.56	0.65	14.0
		1750	D56	2.96	M	6.2	3.3	2.9	0.1338	6	13	34.0	---	1.15	1750	57.0	63.5	67.5	0.44	0.54	0.63	15.1
		1750	D56	2.96	M	6.2	3.3	2.9	0.1338	6	13	33.8	---	1.15	1750	57.0	63.5	67.5	0.44	0.54	0.63	15.0
		1750	D56	2.96	M	6.5	3.2	2.7	0.1338	6	13	33.8	---	1.15	1750	60.0	67.0	70.3	0.45	0.56	0.65	14.0
		1750	F143/5T	2.96	M	6.5	3.2	2.7	0.1338	6	13	34.0	---	1.15	1750	60.0	67.0	70.3	0.45	0.56	0.65	14.0
1.5	1.1	3480	D56	2.23	K	6.8	2.5	2.5	0.0593	6	13	34.9	---	1.15	3480	62.0	69.0	70.0	0.61	0.72	0.80	17.2
		3480	D56	2.23	K	6.8	2.5	2.5	0.0593	6	13	34.8	---	1.15	3480	62.0	69.0	70.0	0.61	0.72	0.80	17.1
		3480	D56	2.23	K	6.8	2.5	2.5	0.0593	6	13	34.9	---	1.15	3480	62.0	69.0	70.0	0.61	0.72	0.80	17.2
		3480	D56	2.23	K	6.8	2.5	2.5	0.0593	6	13	34.9	---	1.15	3480	62.0	69.0	70.0	0.61	0.72	0.80	17.1
		3480	F143/5T	2.23	K	6.8	2.5	2.5	0.0593	6	13	34.8	---	1.15	3480	62.0	69.0	70.0	0.61	0.72	0.80	17.1
		1750	F56H	4.44	K	6.5	2.8	2.6	0.1955	6	13	46.9	---	1.15	1750	70.0	75.0	76.5	0.52	0.64	0.72	17.4
		1750	F56H	4.44	L	6.1	2.7	2.8	0.1955	6	13	47.2	---	1.15	1750	65.0	73.0	72.0	0.46	0.58	0.67	19.9
		1750	F56H	4.44	K	6.5	2.7	2.8	0.1955	6	13	46.9	---	1.15	1750	70.0	75.0	76.5	0.52	0.64	0.72	17.9
		1750	F56H	4.44	K	6.5	2.8	2.6	0.1955	6	13	46.9	---	1.15	1750	70.0	75.0	76.5	0.52	0.64	0.72	17.4
		1750	G143/5T	4.44	K	6.5	2.8	2.6	0.1955	6	13	47.2	---	1.15	1750	70.0	75.0	76.5	0.52	0.64	0.72	17.4
2	1.5	3490	F56H	2.97	K	7.2	2.7	2.5	0.0790	6	13	44.0	---	1.15	3490	71.0	75.0	76.0	0.67	0.78	0.84	20.1
		3490	F56H	2.97	K	7.2	2.7	2.5	0.0790	6	13	44.0	---	1.15	3490	71.0	75.0	76.0	0.67	0.78	0.84	20.1
		3470	F56H	2.99	K	7.0	2.5	2.4	0.0790	6	13	42.6	---	1.15	3470	69.0	73.0	74.0	0.72	0.81	0.87	20.0
		3470	F56H	2.99	K	7.0	2.5	2.4	0.0790	6	13	44.0	---	1.15	3470	69.0	73.0	74.0	0.72	0.81	0.87	20.0
		3470	G143/5T	2.99	K	7.0	2.5	2.4	0.0790	6	13	42.6	---	1.15	3470	69.0	73.0	74.0	0.72	0.81	0.87	20.0
		1750	G143/5T	5.92	K	6.9	2.8	2.5	0.2133	6	13	49.8	---	1.15	1750	74.0	78.0	78.1	0.60	0.71	0.78	21.0
		1750	G56H	5.92	K	6.9	2.8	2.5	0.2133	6	13	50.0	---	1.15	1750	74.0	78.0	78.1	0.60	0.71	0.78	21.0
		1750	G56H	5.92	K	7.0	2.7	2.8	0.2133	6	13	49.8	---	1.15	1750	73.5	78.0	79.0	0.57	0.70	0.77	21.0
3	2.2	3490	G56H	4.45	J	8.5	2.5	2.8	0.0949	6	13	51.3	---	1.15	3490	77.0	82.5	84.0	0.96	0.97	0.97	24.0
		3490	G56H	4.45	J	7.8	2.5	2.8	0.0949	6	13	52.9	---	1.15	3490	77.0	82.5	84.0	0.96	0.97	0.97	24.0
		3490	G143/5T	4.45	J	8.5	2.5	2.8	0.0949	6	13	52.9	---	1.15	3490	77.0	82.5	84.0	0.96	0.97	0.97	24.0
		3480	G143/5T*	4.47	J	7.8	2.5	2.5	0.0949	6	13	52.9	---	1.15	3480	75.0	79.0	80.0	0.82	0.90	0.93	26.0
		3480	G56H*	4.47	J	7.5	2.5	2.5	0.0949	6	13	51.3	---	1.15	3480	78.0	81.0	82.0	0.85	0.90	0.92	25.0
		3460	G56H*	4.49	J	7.0	2.2	2.2	0.0949	6	13	51.3	---	1.15	3460	78.0	80.0	80.0	0.83	0.89	0.91	26.8
		3460	G56H*	4.49	J	7.0	2.2	2.2	0.0949	6	13	51.3	---	1.15	3460	78.0	80.0	80.0	0.83	0.89	0.91	26.8

Continued on next page

Data subject to change without notice.

Valid for lines:

GENERAL PURPOSE
TEFC - Single Phase - Integral Frames

CLOSE-COUPLE PUMP MOTORS - TYPE JM & JP
TEFC - Single Phase

Output		Rated Speed (rpm)	Frame	Full Load Torque (ft.lb)	Locked Rotor Current		Locked Rotor Torque Tl/Tn	Break-down Torque Tb/Tn	Inertia J (lb-ft²)	Allowable locked rotor time (s)		Weight (lb)	Sound dB(A)	Service Factor	230 V							
															Rated speed (rpm)	% of full load						Full load current In (A)
																Efficiency			Power Factor			
HP	kW				Code	Il/In				Hot	Cold					50	75	100	50	75	100	
1	0.75	3510	143T	1.48	L	6.5	2.4	2.4	0.0356	6	13	46.3	60.0	1.15	3510	57.0	63.0	67.0	0.62	0.71	0.77	6.30
		1760	143T	2.94	L	8.2	2.5	3.2	0.1168	6	13	50.7	---	1.15	1760	62.0	71.0	75.0	0.65	0.75	0.82	5.30
		1160	145	4.47	J	5.5	1.9	2.2	0.1554	6	13	59.5	---	1.00	1160	52.0	61.0	65.0	0.68	0.75	0.81	6.20
1.5	1.1	3530	143T	2.20	K	7.5	2.2	2.7	0.0470	6	13	50.7	---	1.15	3530	65.0	72.0	73.0	0.66	0.76	0.81	7.80
		1175	182T	6.61	M	7.0	2.4	2.8	0.4343	6	13	84.3	---	1.15	1175	63.0	71.0	75.0	0.49	0.60	0.68	9.80
2	1.5	3520	145T	2.94	L	8.0	2.2	2.3	0.0553	6	13	54.8	---	1.15	3520	71.0	76.0	79.0	0.71	0.81	0.86	9.80
		1725	W182/4T	6.01	H	6.0	2.5	2.3	0.2119	6	13	81.6	---	1.15	1725	76.0	79.0	80.0	0.72	0.81	0.86	9.50
		1750	145	5.92	J	7.3	2.2	2.4	0.1554	6	13	59.5	---	1.15	1750	69.0	76.0	78.0	0.80	0.87	0.91	9.20
		1750	145T	5.92	J	7.3	2.2	2.4	0.0000	6	13	0.0	---	1.15	1750	69.0	76.0	78.0	0.80	0.87	0.91	9.20
		1175	W213/5T	8.82	K	7.2	2.4	2.5	0.5221	6	13	118	---	1.15	1175	69.0	76.0	78.0	0.65	0.74	0.79	10.6
3	2.2	3500	145T	4.44	J	7.0	2.1	2.3	0.0664	6	13	61.4	---	1.15	3500	75.0	78.5	79.0	0.79	0.87	0.90	13.5
		3520	182T	4.42	J	7.5	2.4	2.8	0.1564	6	13	90.8	---	1.15	3520	72.0	78.0	80.0	0.83	0.90	0.92	13.6
		3520	182T	4.42	J	7.5	2.4	2.8	0.1564	6	13	90.4	---	1.15	3520	72.0	78.0	80.0	0.83	0.90	0.92	13.6
		1750	W112M	8.88	J	7.0	2.1	2.0	0.2297	6	13	88.2	---	1.15	1750	78.5	81.5	82.0	0.65	0.77	0.82	14.6
		1750	W184T	8.88	J	7.0	2.1	2.0	0.2297	6	13	88.2	---	1.15	1750	78.5	81.5	82.0	0.65	0.77	0.82	14.6
		1750	184T	8.88	J	7.5	2.8	2.5	0.3109	6	13	97.0	---	1.15	1750	67.0	74.0	77.0	0.84	0.90	0.93	13.6
		1160	W213/5T	13.4	G	6.0	2.0	2.0	0.6099	6	13	126	---	1.15	1160	74.0	79.0	80.0	0.87	0.91	0.92	13.4
5	3.7	3500	184T	7.40	J	7.8	2.8	2.6	0.1906	6	13	103	---	1.15	3500	80.0	82.5	83.0	0.81	0.89	0.92	21.0
		1730	184T	15.0	J	8.0	2.8	2.4	0.4343	6	13	113	---	1.15	1730	72.0	78.0	79.0	0.86	0.92	0.95	21.4
7.5	5.5	3515	213T	11.1	H	7.6	1.8	2.7	0.4862	6	13	142	---	1.15	3515	83.0	85.0	86.0	0.88	0.93	0.94	29.8
		1730	215T	22.5	J	7.0	3.2	2.4	0.8804	6	13	158	---	1.15	1730	78.0	82.0	83.0	0.71	0.81	0.86	34.0
		1730	215TZ	22.5	J	7.0	3.2	2.4	0.8804	6	13	158	---	1.15	1730	78.0	82.0	83.0	0.71	0.81	0.86	34.0
10	7.5	3510	215T	14.8	G	6.8	2.2	2.7	0.5285	6	13	158	---	1.15	3510	83.0	85.0	86.0	0.91	0.94	0.95	38.8
		1730	215T	30.0	G	6.7	2.8	2.1	1.15	6	13	181	---	1.15	1730	80.0	83.5	84.0	0.94	0.96	0.97	39.0

ODP - Single Phase

Valid for lines:

SINGLE PHASE
ODP – Foot Mount
ODP – Resilient Base

ODP – C-Face - Foot Mount
ODP – C-Face - Footless
ODP-FootMount-Thermallyprotected

COMMERCIAL HVAC MOTORS
ODP - Single-Phase - Foot Mount
ODP - Single-Phase - Resilient Base

Output		Rated Speed (rpm)	Frame	Full Load Torque (ft.lb)	Locked Rotor Current		Locked Rotor Torque Tl/Tn	Break-down Torque Tb/Tn	Inertia J (lb-ft²)	Allowable locked rotor time (s)		Weight (lb)	Sound dB(A)	Service Factor	115 V							
															Rated speed (rpm)	% of full load						Full load current In (A)
																Efficiency			Power Factor			
HP	kW				Code	Il/In				Hot	Cold					50	75	100	50	75	100	
0.12	0.09	3465	B48	0.180	P	5.0	3.7	3.5	0.0128	6	13	12.1	---	1.40	3465	32.0	36.0	43.7	0.53	0.58	0.66	2.77
		1750	B48	0.360	P	4.4	3.4	3.2	0.0242	6	13	18.0	---	1.40	1750	33.0	41.0	47.3	0.40	0.46	0.52	3.25
		1750	B48	0.360	P	4.4	3.4	3.2	0.0242	6	13	18.0	---	1.40	1750	33.0	41.0	48.1	0.40	0.46	0.52	3.20
0.16	0.12	3440	B48	0.240	M	5.0	3.6	3.0	0.0128	6	13	17.8	---	1.35	3440	37.0	43.0	50.5	0.55	0.60	0.69	3.06
		3440	B48	0.240	M	5.0	3.6	3.0	0.0128	6	13	16.4	---	1.35	3440	37.0	43.0	49.9	0.55	0.60	0.69	3.10
		1740	B48	0.480	P	4.7	3.6	2.9	0.0280	6	13	18.2	---	1.35	1740	38.0	46.5	49.9	0.41	0.48	0.55	3.73
		1740	B48	0.480	N	4.7	3.6	2.9	0.0280	6	13	18.2	---	1.35	1740	38.0	46.5	50.3	0.41	0.48	0.55	3.70
0.25	0.18	3440	B48	0.380	M	5.1	3.5	2.8	0.0150	6	13	17.9	---	1.35	3440	42.0	50.5	54.7	0.56	0.64	0.68	4.30
		3440	B48	0.380	M	5.1	3.5	2.8	0.0150	6	13	18.1	---	1.35	3440	42.0	50.5	54.7	0.56	0.64	0.68	4.30
		3440	56	0.380	M	5.1	3.5	2.8	0.0150	6	13	18.1	---	1.35	3440	42.0	50.5	54.7	0.56	0.64	0.68	4.30
		3440	56	0.380	M	5.1	3.5	2.8	0.0150	6	13	17.9	---	1.35	3440	42.0	50.5	54.7	0.56	0.64	0.68	4.30
		1740	B48	0.740	N	4.8	3.2	2.6	0.0320	6	13	20.3	---	1.35	1740	40.5	48.5	55.9	0.40	0.48	0.54	5.30
		1740	B48	0.740	N	4.8	3.2	2.6	0.0320	6	13	18.6	---	1.35	1740	40.5	48.5	55.9	0.40	0.48	0.54	5.30
		1740	56	0.740	N	4.8	3.2	2.6	0.0320	6	13	18.6	---	1.35	1740	40.5	48.5	55.9	0.40	0.48	0.54	5.30
		1740	56	0.740	N	4.8	3.2	2.6	0.0320	6	13	20.3	---	1.35	1740	40.5	48.5	55.9	0.40	0.48	0.54	5.30
		1730	B48	0.750	L	4.5	3.0	2.4	0.0320	6	13	20.5	---	1.35	1730	45.0	53.0	55.8	0.43	0.52	0.60	4.78
		1730	56	0.750	L	4.5	3.0	2.4	0.0320	6	13	20.5	---	1.35	1730	45.0	53.0	55.8	0.43	0.52	0.60	4.78
0.33	0.25	3480	C48	0.490	N	5.9	3.8	3.0	0.0190	6	13	20.7	---	1.35	3480	46.5	54.1	57.6	0.49	0.59	0.65	5.70
		3480	C56	0.490	N	5.9	3.8	3.0	0.0190	6	13	21.0	---	1.35	3480	46.5	54.1	57.6	0.49	0.59	0.65	5.70
		3470	C48	0.490	L	5.5	3.4	3.0	0.0190	6	13	20.1	---	1.35	3470	48.0	56.0	60.4	0.53	0.62	0.69	5.07
		3470	C56	0.490	L	5.5	3.4	3.0	0.0190	6	13	20.1	---	1.35	3470	48.0	56.0	60.4	0.53	0.62	0.69	5.07
		1745	C48	0.980	N	5.2	3.5	2.8	0.0401	6	13	21.4	---	1.35	1745	45.5	53.5	58.2	0.39	0.47	0.55	6.60
		1745	C48	0.980	N	5.2	3.5	2.8	0.0401	6	13	21.5	---	1.35	1745	45.5	53.5	58.2	0.39	0.47	0.55	6.60
		1745	C56	0.980	N	5.2	3.5	2.8	0.0401	6	13	21.9	---	1.35	1745	45.5	53.5	58.2	0.39	0.47	0.55	6.60
		1740	C48	0.980	M	4.8	3.2	2.7	0.0401	6	13	21.2	---	1.35	1740	47.0	55.0	58.6	0.42	0.51	0.58	6.22
		1740	C48	0.980	M	4.8	3.2	2.7	0.0401	6	13	21.2	---	1.35	1740	47.0	55.0	58.6	0.42	0.51	0.58	6.21
		1740	C56	0.980	M	4.8	3.2	2.7	0.0401	6	13	21.2	---	1.35	1740	47.0	55.0	58.6	0.42	0.51	0.58	6.22

Continued on next page

Data subject to change without notice.

Valid for lines:

SINGLE PHASE
ODP – Foot Mount
ODP – Resilient Base

ODP – C-Face - Foot Mount
ODP – C-Face - Footless
ODP-FootMount-Thermallyprotected

COMMERCIAL HVAC MOTORS
ODP - Single-Phase - Foot Mount
ODP - Single-Phase - Resilient Base

Output		Rated Speed (rpm)	Frame	Full Load Torque (ft.lb)	Locked Rotor Current		Locked Rotor Torque Tl/Tn	Break-down Torque Tb/Tn	Inertia J (lb-ft²)	Allowable locked rotor time (s)		Weight (lb)	Sound dB(A)	Service Factor	115 V							
																% of full load						
																Efficiency			Power Factor			Full load current In (A)
HP	kW				Code	II/In				Hot	Cold				Rated speed (rpm)	50	75	100	50	75	100	
0.5	0.37	3470	C48	0.750	L	6.0	3.8	3.0	0.0233	6	13	23.1	---	1.25	3470	53.5	60.7	64.4	0.52	0.61	0.69	7.20
		3470	C56	0.750	L	6.0	3.8	3.0	0.0233	6	13	23.1	---	1.25	3470	53.5	60.7	64.4	0.52	0.61	0.69	7.20
		3460	C48	0.750	L	6.0	3.3	2.6	0.0233	6	13	23.4	---	1.25	3460	56.4	62.7	66.4	0.56	0.66	0.72	6.70
		3460	C56	0.750	L	6.0	3.3	2.6	0.0233	6	13	23.4	---	1.25	3460	56.4	62.7	66.4	0.56	0.66	0.72	6.70
		1730	C48	1.50	M	5.0	3.0	2.5	0.0482	6	13	23.8	---	1.25	1730	53.0	60.0	64.0	0.45	0.52	0.60	8.77
		1730	C48	1.50	M	5.4	3.3	2.4	0.0482	6	13	23.8	---	1.25	1730	53.0	59.0	61.7	0.43	0.52	0.61	8.50
		1730	C48	1.50	M	5.4	3.3	2.4	0.0482	6	13	24.1	---	1.25	1730	53.0	59.0	61.7	0.43	0.52	0.61	8.50
		1730	C56	1.50	M	5.4	3.3	2.4	0.0482	6	13	24.1	---	1.25	1730	53.0	59.0	61.7	0.43	0.52	0.61	8.50
		1730	C56	1.50	M	5.0	3.0	2.5	0.0482	6	13	23.8	---	1.25	1730	53.0	60.0	64.0	0.45	0.52	0.60	8.77
		1720	C48	1.51	K	4.8	3.0	2.3	0.0482	6	13	23.8	---	1.25	1720	54.5	61.0	63.2	0.45	0.55	0.63	8.00
		1720	C48	1.51	K	4.8	3.0	2.3	0.0482	6	13	23.8	---	1.25	1720	54.5	61.0	63.2	0.45	0.55	0.63	8.03
		1720	C56	1.51	K	4.8	3.0	2.3	0.0482	6	13	23.8	---	1.25	1720	54.5	61.0	63.2	0.45	0.55	0.63	8.03
0.75	0.55	3525	B56	1.10	L	6.0	2.5	2.8	0.0332	6	13	27.8	---	1.25	3525	56.5	64.2	67.2	0.52	0.61	0.68	10.5
		3520	B56	1.10	K	6.0	2.3	2.6	0.0332	6	13	30.2	---	1.25	3520	59.0	66.0	68.3	0.56	0.65	0.72	9.76
		1745	D56	2.23	L	5.5	2.7	2.6	0.1070	6	13	26.6	---	1.25	1745	57.7	65.9	66.7	0.41	0.51	0.60	10.8
		1740	D56	2.23	K	5.3	2.5	2.5	0.1070	6	13	30.0	---	1.25	1740	61.5	68.0	69.0	0.46	0.57	0.66	10.4
		1740	D56	2.23	K	5.3	2.5	2.5	0.1070	6	13	30.0	---	1.25	1740	61.5	68.0	69.1	0.46	0.57	0.66	10.5
		1740	D56	2.23	K	5.3	2.5	2.5	0.1070	6	13	30.0	---	1.25	1740	61.5	68.0	69.1	0.46	0.57	0.66	10.4
1	0.75	3520	D56	1.47	M	7.0	2.8	2.9	0.0415	6	13	24.9	---	1.25	3520	54.5	62.1	66.4	0.53	0.63	0.71	13.6
		3520	D56	1.47	M	7.0	2.8	2.9	0.0415	6	13	24.9	---	1.25	3520	54.5	62.1	66.3	0.53	0.63	0.71	13.6
		1740	D56	2.98	K	5.6	2.5	2.4	0.1338	6	13	25.0	---	1.15	1740	66.0	71.0	71.8	0.49	0.61	0.69	12.9
		1740	D56	2.98	L	5.6	2.7	2.6	0.1338	6	13	25.0	---	1.15	1740	64.2	70.0	71.4	0.44	0.56	0.64	14.0
		1740	D56	2.98	L	5.6	2.7	2.6	0.1338	6	13	25.0	---	1.15	1740	64.2	70.0	71.4	0.44	0.56	0.64	14.0
		1730	D56	2.99	K	5.6	2.5	2.4	0.1338	6	13	25.0	---	1.15	1730	66.0	71.0	71.8	0.49	0.61	0.69	12.9
1.5	1.1	3500	D56	2.22	L	6.7	2.5	2.4	0.0498	6	13	33.6	---	1.15	3500	61.5	67.5	70.1	0.58	0.69	0.77	17.8
		3500	D56	2.22	L	6.7	2.5	2.4	0.0498	6	13	33.6	---	1.15	3500	61.5	67.5	70.1	0.58	0.69	0.77	17.8
		3500	D56	2.22	L	6.7	2.5	2.4	0.0498	6	13	33.6	---	1.15	3500	61.5	67.5	70.0	0.58	0.69	0.77	17.8
		1740	F56H	4.47	L	5.8	2.8	2.5	0.1955	6	13	34.3	---	1.15	1740	65.5	71.1	71.3	0.46	0.57	0.66	20.4
		1740	F56H	4.47	L	5.8	2.8	2.5	0.1955	6	13	34.3	---	1.15	1740	65.5	71.1	71.3	0.46	0.57	0.66	20.4
		1730	F56H	4.49	K	5.7	2.6	2.4	0.1955	6	13	34.3	---	1.15	1730	67.5	72.0	71.7	0.49	0.61	0.70	19.1
		1730	F56H	4.49	K	5.7	2.6	2.4	0.1955	6	13	34.3	---	1.15	1730	67.5	72.0	71.7	0.49	0.61	0.70	19.1

Continued on next page

ODP - Single Phase continued

Valid for lines:

SINGLE PHASE
ODP – Foot Mount
ODP – Resilient Base

ODP – C-Face - Foot Mount
ODP – C-Face - Footless
ODP-FootMount-Thermallyprotected

COMMERCIAL HVAC MOTORS
ODP - Single-Phase - Foot Mount
ODP - Single-Phase - Resilient Base

Output		Rated Speed (rpm)	Frame	Full Load Torque (ft.lb)	Locked Rotor Current		Locked Rotor Torque Tl/Tn	Break-down Torque Tb/Tn	Inertia J (lb-ft²)	Allowable locked rotor time (s)		Weight (lb)	Sound dB(A)	Service Factor	115 V							
																% of full load						
																Efficiency			Power Factor			
HP	kW				Code	Il/In				Hot	Cold				Rated speed (rpm)	50	75	100	50	75	100	Full load current In (A)
2	1.5	3525	F56H	2.94	M	8.0	2.5	2.8	0.0664	6	13	41.7	---	1.15	3525	71.1	76.2	77.9	0.59	0.67	0.75	21.9
		3525	F56H	2.94	M	8.0	2.5	2.8	0.0664	6	13	41.7	---	1.15	3525	71.1	76.2	77.9	0.59	0.67	0.76	21.9
		3525	F56H	2.94	M	8.0	2.5	2.8	0.0664	6	13	41.7	---	1.15	3525	71.1	76.2	77.9	0.59	0.67	0.75	21.9
		3525	F56H	2.94	M	8.0	2.5	2.8	0.0664	6	13	41.7	---	1.15	3525	71.1	76.2	77.9	0.59	0.67	0.75	21.9
		1730	G56H	5.99	L	5.6	2.5	2.5	0.2302	6	13	40.5	---	1.00	1730	64.3	70.6	71.4	0.42	0.53	0.64	28.0
		1730	G56H	5.99	L	5.6	2.5	2.5	0.2302	6	13	40.5	---	1.00	1730	64.3	70.6	71.4	0.42	0.53	0.64	28.0
		1720	G56H	6.02	K	5.4	2.3	2.3	0.2302	6	13	40.5	---	1.00	1720	66.0	70.5	71.3	0.47	0.59	0.68	26.4
		1720	G56H	6.02	K	5.4	2.3	2.3	0.2302	6	13	40.5	---	1.00	1720	66.0	70.5	71.3	0.47	0.59	0.68	26.4
3	2.2	3490	G56H	4.45	K	7.0	2.3	2.4	0.0721	6	13	42.2	---	1.00	3490	74.9	77.8	77.4	0.61	0.73	0.80	31.0
		3490	G56H	4.45	K	7.0	2.3	2.5	0.0721	6	13	42.2	---	1.00	3490	75.0	78.0	78.0	0.61	0.73	0.80	31.0
		3480	G56H	4.47	J	7.0	2.2	2.3	0.0721	6	13	42.2	---	1.00	3480	77.0	79.2	78.5	0.65	0.77	0.83	29.5
		3480	G56H	4.47	J	7.0	2.2	2.3	0.0721	6	13	42.2	---	1.00	3480	77.0	79.2	78.5	0.65	0.77	0.83	29.6

Data subject to change without notice.

ODP - Single Phase - Integral Frames

Valid for lines:

SINGLE PHASE
ODP – Foot Mount
ODP – Resilient Base

ODP – C-Face - Foot Mount
ODP – C-Face - Footless
ODP-FootMount-Thermallyprotected

COMMERCIAL HVAC MOTORS
ODP - Single-Phase - Foot Mount
ODP - Single-Phase - Resilient Base

Output		Rated Speed (rpm)	Frame	Full Load Torque (ft.lb)	Locked Rotor Current		Locked Rotor Torque Tl/Tn	Break-down Torque Tb/Tn	Inertia J (lb-ft²)	Allowable locked rotor time (s)		Weight (lb)	Sound dB(A)	Service Factor	230 V							
															Rated speed (rpm)	% of full load						Full load current In (A)
																Efficiency			Power Factor			
HP	kW				Code	II/In				Hot	Cold					50	75	100	50	75	100	
3	2.2	3520	182T	4.42	J	6.4	2.3	2.6	0.1803	6	13	85.7	55.0	1.25	3520	78.0	81.0	81.5	0.00	0.71	0.79	15.0
		1750	184	8.88	K	6.5	2.1	2.0	0.4319	6	13	106	60.0	1.25	1750	71.0	74.0	75.0	0.56	0.68	0.75	17.5
5	3.7	3500	184	7.40	G	6.5	2.6	2.0	0.2563	6	13	104	---	1.25	3500	80.0	81.5	81.5	0.85	0.91	0.92	21.0
		3500	184T	7.40	G	6.5	2.6	2.0	0.2563	6	13	102	---	1.25	3500	80.0	81.5	81.5	0.85	0.91	0.92	21.0
		1745	184	14.8	H	6.5	2.2	2.0	0.4983	6	13	115	---	1.25	1745	81.5	82.5	82.5	0.82	0.87	0.91	21.5
7.5	5.5	3510	184T	11.1	H	7.2	2.4	2.3	0.2943	6	13	112	60.0	1.25	3510	82.0	84.0	85.0	0.90	0.93	0.95	30.0

ODP - Split Phase

Output		Rated Speed (rpm)	Frame	Full Load Torque (ft.lb)	Locked Rotor Current		Locked Rotor Torque Tl/Tn	Break-down Torque Tb/Tn	Inertia J (lb-ft²)	Allowable locked rotor time (s)		Weight (lb)	Sound dB(A)	Service Factor	115V							
															Rated speed (rpm)	% of full load						Full load current In (A)
																Efficiency			Power Factor			
HP	kW				Code	II/In				Hot	Cold					50	75	100	50	75	100	
0.25	0.18	1735	B48	0.750	R	6.7	1.9	2.7	0.0320	6	13	20.7	---	1.35	1735	47.0	55.0	59.5	0.40	0.48	0.56	4.80
0.33	0.25	1735	C48	0.990	P	6.4	1.9	2.6	0.0401	6	13	23.2	---	1.35	1735	48.0	55.0	60.0	0.41	0.50	0.57	6.25
0.5	0.37	1730	C48	1.50	M	6.0	1.3	2.2	0.0482	6	13	26.0	---	1.25	1730	54.5	61.0	63.5	0.44	0.54	0.63	8.00

TEFC - Three Phase - Fractional Motors

Valid for lines:

FRACTIONAL MOTORS - Three-Phase
TEFC - Foot Mount
TEFC - C-Face - Foot Mount
TEFC - C-Face - Footless

JET PUMP THREE-PHASE (56C/56J FRAMES)
TEFC - Foot Mount
TEFC - Footless

Output		Rated Speed (rpm)	Frame	Full Load Torque (ft.lb)	Locked Rotor Current		Locked Rotor Torque Tl/Tn	Break-down Torque Tb/Tn	Inertia J (lb-ft²)	Allowable locked rotor time (s)		Weight (lb)	Sound dB(A)	Service Factor	230 V							
															Rated speed (rpm)	% of full load						Full load current In (A)
																Efficiency			Power Factor			
HP	kW				Code	Il/In				Hot	Cold					50	75	100	50	75	100	
0.25	0.18	3475	56	0.370	L	6.4	2.5	3.0	0.0389	60	132	17.2	---	1.15	3475	46.0	52.5	57.5	0.75	0.82	0.86	0.457
		1765	56	0.730	M	6.3	2.4	3.0	0.0453	38	84	18.1	---	1.15	1765	57.5	66.0	70.0	0.43	0.54	0.62	0.521
		1160	56	1.12	K	5.1	2.3	3.0	0.0710	46	101	19.0	---	1.15	1160	55.0	64.0	68.0	0.41	0.52	0.61	0.545
0.33	0.25	3485	56	0.490	L	6.4	2.5	3.0	0.0389	40	88	17.2	---	1.15	3485	48.0	57.5	62.0	0.72	0.79	0.84	0.602
		1765	56	0.970	M	7.1	2.3	3.0	0.0517	31	68	19.4	---	1.15	1765	64.0	72.0	74.0	0.47	0.58	0.68	0.624
		1160	56	1.47	L	5.5	2.4	3.0	0.0888	36	79	21.8	---	1.15	1160	59.5	68.0	70.0	0.42	0.53	0.62	0.723
0.5	0.37	3500	56	0.740	L	7.0	2.6	3.0	0.0453	35	77	19.0	---	1.15	3500	55.0	62.0	68.0	0.67	0.75	0.81	0.843
		1760	56	1.47	L	7.0	2.4	3.0	0.0584	20	44	20.9	---	1.15	1760	68.0	74.0	77.0	0.48	0.61	0.70	0.862
		1160	56	2.23	K	5.4	2.1	3.0	0.1065	22	48	24.7	---	1.15	1160	64.0	70.0	72.0	0.44	0.56	0.65	0.992
0.75	0.55	3475	56	1.12	K	7.0	2.5	2.9	0.0517	23	51	20.3	---	1.15	3475	62.0	68.0	72.0	0.70	0.79	0.85	1.13
		1755	56	2.21	K	6.9	2.4	3.0	0.0648	17	37	22.5	---	1.15	1755	72.0	77.0	78.5	0.48	0.61	0.72	1.22
		1155	56H	3.36	K	5.8	2.3	3.0	0.1331	21	46	29.5	---	1.15	1155	70.0	74.0	75.5	0.46	0.59	0.68	1.34
1	0.75	3480	56	1.49	K	7.2	2.4	2.9	0.0643	24	53	23.4	---	1.15	3480	66.0	72.0	74.0	0.68	0.79	0.84	1.51
		1760	56	2.94	M	7.7	2.7	3.0	0.0842	12	26	26.9	---	1.15	1760	74.0	78.5	80.0	0.48	0.62	0.71	1.66
		1145	56H	4.52	J	5.6	2.1	2.6	0.1597	15	33	33.7	---	1.15	1145	72.0	75.5	77.0	0.50	0.63	0.73	1.67
1.5	1.1	3460	56	2.25	J	7.2	2.4	2.7	0.0771	12	26	26.0	---	1.15	3460	72.0	75.5	77.0	0.76	0.85	0.90	1.99
		1750	56H	4.44	K	7.5	2.5	3.0	0.1037	9	20	31.3	---	1.15	1750	77.0	80.0	81.5	0.54	0.67	0.76	2.23
2	1.5	3475	56H	2.98	K	7.7	2.3	2.9	0.0963	11	24	30.9	---	1.15	3475	75.5	78.5	80.0	0.76	0.86	0.90	2.62
		1745	56H	5.94	K	7.3	2.4	2.7	0.1232	8	18	35.9	---	1.15	1745	80.0	81.5	82.5	0.58	0.72	0.80	2.85
3	2.2	3480	56H	4.47	K	8.5	2.7	2.8	0.1279	6	13	38.1	---	1.15	3480	80	81.5	81.5	0.76	0.86	0.9	3.76

Data subject to change without notice.

Valid for lines:

FRACTIONALMOTORS-Three-Phase
ODP - Foot Mount
ODP - C-Face - Foot Mount
ODP - C-Face - Footless
ODP - Resilient Base

JETPUMPTHREE-PHASE(56C/56JFRAMES)
ODP - Foot Mount
ODP - Footless

COMMERCIAL HVAC MOTORS
ODP - Three Phase - Resilient Base

Output		Rated Speed (rpm)	Frame	Full Load Torque (ft.lb)	Locked Rotor Current		Locked Rotor Torque Tl/Tn	Break-down Torque Tb/Tn	Inertia J (lb-ft²)	Allowable locked rotor time (s)		Weight (lb)	Sound dB(A)	Service Factor	230 V							
															Rated speed (rpm)	% of full load						Full load current In (A)
																Efficiency			Power Factor			
HP	kW				Code	Il/In				Hot	Cold					50	75	100	50	75	100	
		3520	56	0.370	M	7.0	2.8	3.6	0.0389	48	106	16.1	---	1.35	3520	52.5	62.0	64.0	0.53	0.64	0.72	0.490
0.25	0.18	1760	56	0.740	M	5.9	2.3	3.5	0.0389	33	73	15.7	---	1.35	1760	55.0	62.0	66.0	0.41	0.51	0.60	0.571
		1160	56	1.12	K	4.5	2.1	3.0	0.0622	37	81	17.0	---	1.35	1160	52.5	60.0	64.0	0.41	0.51	0.59	0.598
		3515	56	0.490	M	6.5	2.5	3.3	0.0389	38	84	16.1	---	1.35	3515	55.0	62.0	66.0	0.52	0.63	0.72	0.660
0.33	0.25	1755	56	0.970	L	5.5	2.0	3.1	0.0389	29	64	15.7	---	1.35	1755	57.5	64.0	68.0	0.43	0.54	0.64	0.721
		1160	56	1.47	L	5.1	2.2	3.1	0.0710	30	66	18.3	---	1.35	1160	59.5	64.0	68.0	0.41	0.52	0.61	0.756
		3495	56	0.740	L	6.0	2.4	2.8	0.0389	34	75	16.3	---	1.25	3495	57.5	64.0	68.0	0.49	0.62	0.72	0.949
0.5	0.37	1755	56	1.48	L	6.0	2.2	2.9	0.0453	23	51	17.4	---	1.25	1755	64.0	70.0	72.0	0.43	0.56	0.66	0.977
		1155	56	2.24	K	5.3	2.2	3.0	0.0888	23	51	21.2	---	1.25	1155	64.0	70.0	72.0	0.43	0.55	0.65	0.992
		3480	56	1.12	K	6.2	2.3	2.6	0.0453	31	68	18.3	---	1.25	3480	64.0	70.0	72.0	0.53	0.67	0.76	1.26
0.75	0.55	1755	56	2.21	K	6.3	2.3	3.0	0.0584	13	29	20.3	---	1.25	1755	66.0	72.0	75.5	0.45	0.58	0.68	1.34
		1150	56H	3.38	J	5.4	2.0	2.7	0.1153	20	44	25.6	---	1.15	1150	70.0	74.0	75.5	0.48	0.61	0.71	1.29
		3470	56	1.49	K	6.3	2.3	2.5	0.0517	23	51	19.6	---	1.25	3470	66.0	72.0	74.0	0.58	0.70	0.79	1.61
1	0.75	1750	56	2.96	L	6.6	2.5	2.9	0.0712	10	22	23.4	---	1.15	1750	68.0	74.0	77.0	0.44	0.58	0.68	1.80
		1145	56H	4.52	J	5.6	2.2	2.7	0.1419	16	35	30.0	---	1.15	1145	72.0	75.5	77.0	0.49	0.63	0.72	1.70
1.5	1.1	3465	56	2.24	J	6.6	2.3	2.5	0.0648	17	37	22.5	---	1.15	3465	72.0	75.5	77.0	0.63	0.75	0.83	2.16
		1745	56H	4.45	K	6.9	2.5	2.8	0.0907	10	22	27.6	---	1.15	1745	75.5	78.5	80.0	0.51	0.65	0.75	2.30
2	1.5	3470	56H	2.99	J	7.0	2.3	2.5	0.0840	10	22	27.1	---	1.15	3470	77.0	78.5	78.5	0.66	0.79	0.85	2.82
		1740	56H	5.96	K	6.7	2.4	2.5	0.1037	7	15	30.6	---	1.15	1740	75.5	78.5	78.5	0.54	0.68	0.77	3.11
3	2.2	3450	56H	4.51	J	7.0	2.2	2.5	0.0959	8	18	30.2	---	1.15	3450	80.0	81.5	81.5	0.70	0.82	0.87	3.89
		1735	56H	8.96	K	7.1	2.4	2.7	0.1554	7	15	42.6	---	1.15	1735	80.0	81.5	81.5	0.57	0.71	0.79	4.29

ODP - Jet Pump Motors - Single Phase

Valid for lines:

JET PUMP SINGLE-PHASE (56C/56J FRAMES)
ODP - Foot Mount
ODP - Footless

Output		Rated Speed (rpm)	Frame	Full Load Torque (ft.lb)	Locked Rotor Current		Locked Rotor Torque Tl/Tn	Break-down Torque Tb/Tn	Inertia J (lb-ft²)	Allowable locked rotor time (s)		Weight (lb)	Sound dB(A)	Service Factor	115 V							
															Rated speed (rpm)	% of full load						Full load current In (A)
																Efficiency			Power Factor			
HP	kW				Code	Il/In				Hot	Cold					50	75	100	50	75	100	
0.16	0.12	3440	W56	0.240	N	5.0	0.0	0.0	0.0000	6	13	0.0	---	1.75	3440	0.000	0.000	50.5	0.00	0.00	0.69	3.18
0.25	0.18	3440	W56	0.380	L	3.8	2.4	2.7	0.1258	6	13	20.7	---	1.75	3440	32.4	41.8	47.3	0.48	0.56	0.63	5.45
		3440	W56	0.380	L	3.8	2.4	2.7	0.1258	6	13	20.7	---	1.75	3440	32.4	41.8	47.3	0.48	0.56	0.63	5.45
		3440	W56	0.380	L	3.8	2.4	2.7	0.1258	6	13	20.7	---	1.75	3440	32.4	41.8	47.3	0.48	0.56	0.63	5.40
0.33	0.25	3445	W56	0.500	L	4.0	2.7	2.7	0.1471	6	13	22.1	---	1.75	3445	35.0	43.1	48.3	0.48	0.55	0.62	6.98
		3445	W56	0.500	L	4.0	2.7	2.7	0.1471	6	13	22.1	---	1.75	3445	35.0	43.1	48.3	0.48	0.55	0.62	6.98
		3445	W56	0.500	L	4.0	2.7	2.7	0.1471	6	13	22.1	---	1.75	3445	35.0	43.1	48.3	0.48	0.55	0.62	7.00
0.5	0.37	3475	W56	0.750	L	4.6	1.9	2.9	0.1898	6	13	24.5	---	1.60	3475	44.8	53.5	58.0	0.47	0.55	0.63	8.90
		3465	W56	0.750	L	4.6	1.9	2.9	0.1898	6	13	24.5	---	1.60	3465	44.8	53.5	58.0	0.47	0.55	0.63	9.30
0.75	0.55	3465	W56	1.12	L	5.3	3.2	3.8	0.2515	6	13	26.2	---	1.50	3465	51.1	59.4	64.3	0.48	0.58	0.66	11.4
		3465	W56	1.12	L	5.3	3.2	3.8	0.2515	6	13	26.2	---	1.50	3465	51.1	59.4	64.3	0.48	0.58	0.66	11.4
		3465	W56	1.12	L	5.3	2.7	2.8	0.2515	6	13	26.2	---	1.50	3465	51.1	59.4	64.3	0.48	0.58	0.66	11.4
1	0.75	3495	E56	1.48	K	5.8	2.0	2.6	0.3037	6	13	21.5	---	1.40	3495	60.5	66.2	69.0	0.58	0.60	0.77	12.1
		3495	E56	1.48	K	5.8	2.0	2.6	0.3037	6	13	21.5	---	1.40	3495	60.5	66.2	69.0	0.58	0.60	0.77	12.1
		3500	E56	1.48	K	5.8	1.8	2.8	0.3037	6	13	21.5	---	1.40	3500	58.0	65.0	70.0	0.52	0.62	0.70	13.4
		3495	E56	1.48	K	5.8	2.0	2.6	0.3037	6	13	21.5	---	1.40	3495	60.5	66.2	69.0	0.58	0.60	0.77	12.1
1.5	1.1	3465	E56	2.24	H	5.4	1.9	2.5	0.3844	6	13	30.1	---	1.30	3465	64.6	69.3	69.7	0.64	0.75	0.82	16.9
		3465	E56	2.24	H	5.4	1.9	2.5	0.3844	6	13	30.1	---	1.30	3465	64.6	69.3	69.7	0.64	0.75	0.82	16.9
		3480	E56	2.23	J	5.6	1.6	2.5	0.3844	6	13	30.1	---	1.30	3480	64.0	71.0	72.0	0.60	0.72	0.79	17.2
		3470	E56	2.24	J	5.7	1.9	2.5	0.3844	6	13	30.1	---	1.30	3470	63.2	67.8	68.8	0.64	0.74	0.82	17.0
		3470	E56	2.24	J	5.7	1.9	2.5	0.3844	6	13	30.1	---	1.30	3470	63.2	67.8	68.8	0.64	0.74	0.82	17.0
2	1.5	3450	E56	3.00	J	5.9	1.8	2.0	0.4390	6	13	32.8	---	1.20	3450	69.7	72.4	71.9	0.64	0.76	0.83	21.6
		3450	E56	3.00	J	5.9	1.8	2.0	0.4390	6	13	32.8	---	1.20	3450	69.7	72.4	71.9	0.64	0.76	0.83	21.6
		3450	E56	3.00	J	5.9	1.6	2.2	0.4390	6	13	32.8	---	1.20	3450	65.0	70.0	70.0	0.63	0.73	0.80	23.0
		3450	E56	3.00	J	5.9	1.6	2.2	0.4390	6	13	32.8	---	1.20	3450	65.0	70.0	70.0	0.63	0.73	0.80	23.0
3	2.2	3550	E56	4.38	J	6.9	1.5	2.4	0.5505	6	13	44.5	---	1.15	3550	76.8	79.7	80.1	0.71	0.72	0.88	27.5
		3480	E56	4.47	J	6.9	1.5	2.4	0.5505	6	13	44.5	---	1.15	3480	76.8	79.7	80.1	0.71	0.72	0.88	27.5
		3550	E56	4.38	J	6.9	1.5	2.4	0.5505	6	13	44.5	---	1.15	3550	76.8	79.7	80.1	0.71	0.72	0.88	27.5
		3480	E56	4.47	H	6.6	1.7	2.4	0.5505	6	13	44.5	---	1.15	3480	82.0	86.0	86.0	0.70	0.80	0.87	26.8
		3450	E56	4.51	J	6.9	1.5	2.4	0.5505	6	13	45.6	---	1.15	3450	76.8	79.7	80.1	0.71	0.72	0.88	27.5

Data subject to change without notice.

Valid for lines:

JET PUMP SINGLE-PHASE (56C/56J FRAMES)
TEFC - Foot Mount
TEFC - Footless

Output		Rated Speed (rpm)	Frame	Full Load Torque (ft.lb)	Locked Rotor Current		Locked Rotor Torque Tl/Tn	Break-down Torque Tb/Tn	Inertia J (lb-ft²)	Allowable locked rotor time (s)		Weight (lb)	Sound dB(A)	Service Factor	230 V							
																% of full load						
																Efficiency			Power Factor			
HP	kW				Code	Il/In				Hot	Cold				Rated speed (rpm)	50	75	100	50	75	100	Full load current In (A)
0.33	0.25	3490	B56	0.490	N	5.8	3.7	3.2	0.0278	6	13	25.8	---	1.15	3490	40.0	49.0	53.0	0.56	0.64	0.70	2.85
0.5	0.37	3480	B56	0.740	L	5.6	3.2	2.8	0.0316	6	13	26.9	---	1.15	3480	45.0	52.0	58.0	0.56	0.66	0.73	3.80
0.75	0.55	3490	B56	1.11	M	6.3	3.0	2.9	0.0396	6	13	29.1	---	1.15	3490	52.0	60.0	64.0	0.54	0.64	0.72	5.20
1	0.75	3500	D56	1.48	M	7.0	3.2	2.8	0.0515	6	13	33.1	---	1.15	3500	55.0	63.0	67.0	0.56	0.67	0.75	6.40
1.5	1.1	3480	D56	2.23	K	6.8	2.5	2.5	0.0593	6	13	36.4	---	1.15	3480	62.0	69.0	70.0	0.61	0.72	0.80	8.55
2	1.5	3470	F56H	2.99	K	7.0	2.5	2.4	0.0790	6	13	44.2	---	1.15	3470	69.0	73.0	74.0	0.72	0.81	0.87	10.0
3	2.2	3490	G56H	4.45	J	7.8	2.5	2.8	0.0949	6	13	52.9	---	1.15	3490	77.0	82.5	84.0	0.96	0.97	0.97	12.0
		3480	G56H*	4.47	J	7.8	2.5	2.5	0.0949	6	13	52.9	---	1.15	3480	75.0	79.0	80.0	0.82	0.90	0.93	13.0

ODP - Pool & Spa - Single Phase - Start Capacitor - Low Service Factor

Valid for lines:

POOL & SPA MOTORS

ODP - Single Phase - C-Face – Start Capacitor - Low Service Factor

ODP - Single Phase - Square Flange – Start Capacitor - Low Service Factor

Output		Rated Speed (rpm)	Frame	Full Load Torque (ft.lb)	Locked Rotor Current		Locked Rotor Torque Tl/Tn	Break-down Torque Tb/Tn	Inertia J (lb-ft²)	Allowable locked rotor time (s)		Weight (lb)	Sound dB(A)	Service Factor	115 V							
															Rated speed (rpm)	% of full load					Full load current In (A)
																Efficiency			Power Factor		
HP	kW				Code	Il/In				Hot	Cold					50	75	100	50	75	100	
0.75	0.55	3465	K56J	1.12	K	5.3	1.4	2.6	0.0233	6	13	23.2	---	1.30	3465	55.0	62.5	66.2	0.53	0.63	0.72	10.2
1	0.75	3470	K56J	1.49	K	5.7	1.4	2.5	0.0297	6	13	26.6	---	1.25	3470	61.0	67.0	70.1	0.56	0.67	0.74	12.5
1.5	1.1	3450	L56J	2.25	K	5.9	1.3	2.1	0.0361	6	13	30.6	---	1.10	3450	64.5	69.0	69.6	0.61	0.72	0.79	17.7
2	1.5	3460	M56J	2.99	H	5.9	1.3	2.3	0.0403	6	13	33.9	---	1.10	3460	68.0	74.0	76.6	0.80	0.88	0.91	18.6
2.5	1.8	3450	M56J	3.75	G	5.9	1.7	2.1	0.0446	6	13	33.2	---	1.04	3450	74.0	79.0	80.7	0.81	0.86	0.93	21.6

ODP - Pool & Spa - Single Phase - Start Capacitor - High Service Factor

Valid for lines:

POOL & SPA MOTORS

ODP - Single Phase - C-Face – Start Capacitor - High Service Factor

ODP - Single Phase - Square Flange – Start Capacitor - High Service Factor

Output		Rated Speed (rpm)	Frame	Full Load Torque (ft.lb)	Locked Rotor Current		Locked Rotor Torque Tl/Tn	Break-down Torque Tb/Tn	Inertia J (lb-ft²)	Allowable locked rotor time (s)		Weight (lb)	Sound dB(A)	Service Factor	115 V							
															Rated speed (rpm)	% of full load					Full load current In (A)
																Efficiency			Power Factor		
HP	kW				Code	Il/In				Hot	Cold					50	75	100	50	75	100	
0.5	0.37	3515	K56	0.740	N	5.9	2.1	4.0	0.0233	6	13	23.2	---	1.60	3515	45.0	54.0	60.4	0.43	0.52	0.59	9.10
0.75	0.55	3510	K56	1.11	M	6.3	1.9	3.4	0.0297	6	13	26.6	---	1.50	3510	54.0	63.0	65.8	0.48	0.58	0.66	11.2
1.5	1.1	3500	M56J	2.22	K	7.4	1.8	3.1	0.0403	6	13	34.0	---	1.30	3500	63.5	72.0	76.3	0.72	0.80	0.85	15.0
2	1.5	3490	M56J	2.97	J	7.0	2.2	2.7	0.0446	6	13	33.8	---	1.20	3490	66.0	73.0	78.3	0.78	0.85	0.90	18.4

Data subject to change without notice.

Valid for lines:

CLOSE-COUPLED PUMP TEFC MOTORS
JM - TEFC - Single-Phase
JP - TEFC - Single-Phase

FARM DUTY MOTORS
TEFC - Single-Phase - General Purpose - Foot Mount

Output		Rated Speed (rpm)	Frame	Full Load Torque (ft.lb)	Locked Rotor Current		Locked Rotor Torque Tl/Tn	Break-down Torque Tb/Tn	Inertia J (lb-ft²)	Allowable locked rotor time (s)		Weight (lb)	Sound dB(A)	Service Factor	230 V								
															Rated speed (rpm)	% of full load						Full load current In (A)
																Efficiency			Power Factor			
HP	kW				Code	II/In				Hot	Cold					50	75	100	50	75	100	
0.25	0.18	1750	B56	0.740	P	5.8	3.6	2.8	0.0536	6	13	20.3	---	1.15	1750	45.0	53.0	57.7	0.41	0.50	0.58	4.70
0.33	0.25	1750	B56	0.980	N	5.8	3.4	2.8	0.0624	6	13	21.8	---	1.15	1750	49.0	58.0	61.0	0.44	0.53	0.62	5.60
		1750	B56	0.980	N	5.8	3.4	2.8	0.0624	6	13	21.6	---	1.15	1750	49.0	58.0	61.0	0.44	0.53	0.62	5.60
0.5	0.37	1750	B56	1.48	L	5.8	2.9	2.7	0.0804	6	13	24.9	---	1.15	1750	56.0	64.0	66.5	0.46	0.57	0.65	7.40
		1750	B56	1.48	L	5.8	2.9	2.7	0.0804	6	13	24.5	---	1.15	1750	56.0	64.0	66.5	0.46	0.57	0.65	7.40
0.75	0.55	1745	B56	2.23	M	6.2	3.0	2.5	0.0982	6	13	27.6	---	1.15	1745	58.5	66.0	68.5	0.47	0.58	0.66	10.6
		1745	B56	2.23	M	6.2	3.0	2.5	0.0982	6	13	27.8	---	1.15	1745	58.5	66.0	68.5	0.47	0.58	0.66	10.6
1	0.75	1750	D56	2.96	M	6.5	3.2	2.7	0.1338	6	13	34.0	---	1.15	1750	60.0	67.0	70.3	0.45	0.56	0.65	14.0
		1750	D56	2.96	M	6.5	3.2	2.7	0.1338	6	13	37.9	---	1.15	1750	60.0	67.0	70.3	0.45	0.56	0.65	14.0
		1750	F143T	2.96	M	6.5	3.2	2.7	0.1338	6	13	37.4	---	1.15	1750	60.0	67.0	70.3	0.45	0.56	0.65	14.0
1.5	1.1	1750	F56H	4.44	K	6.5	2.8	2.6	0.1955	6	13	47.2	---	1.15	1750	70.0	75.0	76.5	0.52	0.64	0.72	17.4
		1750	F56H	4.44	K	6.5	2.8	2.6	0.1955	6	13	50.3	---	1.15	1750	70.0	75.0	76.5	0.52	0.64	0.72	17.4
		1750	G145T	4.44	K	6.5	2.8	2.6	0.1955	6	13	50.1	---	1.15	1750	70.0	75.0	76.5	0.52	0.64	0.72	17.4
2	1.5	1750	G145T	5.92	K	6.9	2.8	2.5	0.2133	6	13	53.0	---	1.15	1750	74.0	78.0	78.1	0.60	0.71	0.78	21.0
		1750	G56H	5.92	K	6.9	2.8	2.5	0.2133	6	13	49.8	---	1.15	1750	74.0	78.0	78.1	0.60	0.71	0.78	21.0
		1750	G56H	5.92	K	6.9	2.8	2.5	0.2133	6	13	50.7	---	1.15	1750	74.0	78.0	78.1	0.60	0.71	0.78	21.0
		1750	G145T	5.92	K	6.9	2.8	2.5	0.2133	6	13	53.0	---	1.15	1750	74.0	78.0	78.1	0.60	0.71	0.78	21.0

Valid for lines:

CLOSE-COUPLED PUMP TEFC MOTORS
JM - TEFC - Single-Phase
JP - TEFC - Single-Phase

FARM DUTY MOTORS
TEFC - Single-Phase - General Purpose - Foot Mount

Output		Rated Speed (rpm)	Frame	Full Load Torque (ft.lb)	Locked Rotor Current		Locked Rotor Torque Tl/Tn	Break-down Torque Tb/Tn	Inertia J (lb-ft²)	Allowable locked rotor time (s)		Weight (lb)	Sound dB(A)	Service Factor	230 V								
															Rated speed (rpm)	% of full load						Full load current In (A)
																Efficiency			Power Factor			
HP	kW				Code	II/In				Hot	Cold					50	75	100	50	75	100	
2	1.5	1725	W182/4T	6.01	H	6.0	2.5	2.4	0.2119	6	13	81.8	55.0	1.15	1725	76.0	80.0	81.0	0.77	0.83	0.88	10.0
3	2.2	1740	W182/4T	8.93	H	6.0	2.6	2.2	0.2373	6	13	88.2	54.0	1.15	1740	80.0	80.5	81.0	0.73	0.81	0.86	14.5
5	3.7	1730	W213/5T	15.0	J	8.0	3.7	2.7	0.4343	6	13	126	---	1.15	1730	72.0	78.0	79.0	0.86	0.92	0.95	21.4
		1730	W213/5TZ	15.0	J	8.0	3.7	2.7	0.4343	6	13	126	---	1.15	1730	72.0	78.0	79.0	0.86	0.92	0.95	21.4
		1730	184T	15.0	J	8.0	3.7	2.7	0.4343	6	13	112	---	1.15	1730	72.0	78.0	79.0	0.86	0.92	0.95	21.4
7.5	5.5	1730	215T	22.5	J	7.5	4.0	2.6	0.8828	6	13	157	---	1.15	1730	77.0	81.0	83.0	0.71	0.81	0.90	33.0
		1730	215TZ	22.5	J	7.5	4.0	2.6	0.8828	6	13	157	---	1.15	1730	77.0	81.0	83.0	0.71	0.81	0.90	33.0
10	7.5	1720	215T	30.1	G	6.2	2.8	2.1	1.15	6	13	176	---	1.15	1720	80.0	82.5	83.0	0.92	0.95	0.96	40.0

FARM DUTY Motors - Poultry Fan

Valid for lines:

Farm Duty - Poultry Fan - Split Phase
TEAO - Single Phase - Poultry Fan - Resilient Base - Split Phase
TEAO - Single Phase - Poultry Fan - Foot Mount - Split Phase

COMMERCIAL HVAC MOTORS
TEAO - Single Phase - Resilient Base - Split Phase
TEAO - Single Phase - Foot Mount - Split Phase

Output		Rated Speed (rpm)	Frame	Full Load Torque (ft.lb)	Locked Rotor Current		Locked Rotor Torque Tl/Tn	Break-down Torque Tb/Tn	Inertia J (lb-ft²)	Allowable locked rotor time (s)		Weight (lb)	Sound dB(A)	Service Factor	115 V							
															Rated speed (rpm)	% of full load					Full load current In (A)
																Efficiency			Power Factor			
HP	kW				Code	Il/In				Hot	Cold					50	75	100	50	75	100	
0.33	0.25	1740	C48	0.980	N	5.5	1.3	2.8	0.0399	6	13	21.4	---	1.25	1740	51.0	59.0	64.0	0.38	0.46	0.56	6.00
0.5	0.37	1710	C56	1.51	M	5.2	1.2	2.3	0.0472	6	13	24.0	---	1.25	1710	55.0	61.0	65.0	0.41	0.51	0.60	8.40

Valid for lines:

Farm Duty - Poultry Fan - Start Capacitor
TEAO - Single Phase - Poultry Fan - Resilient Base - Start Capacitor
TEAO - Single Phase - Poultry Fan - Foot Mount - Start Capacitor

COMMERCIAL HVAC MOTORS
TEAO - Single Phase - Resilient Base - Start Capacitor
TEAO - Single Phase - Foot Mount - Start Capacitor

Output		Rated Speed (rpm)	Frame	Full Load Torque (ft.lb)	Locked Rotor Current		Locked Rotor Torque Tl/Tn	Break-down Torque Tb/Tn	Inertia J (lb-ft²)	Allowable locked rotor time (s)		Weight (lb)	Sound dB(A)	Service Factor	115 V							
															Rated speed (rpm)	% of full load					Full load current In (A)
																Efficiency			Power Factor			
HP	kW				Code	Il/In				Hot	Cold					50	75	100	50	75	100	
0.75	0.55	1760	B56	2.21	M	6.2	3.0	3.0	0.0975	6	13	29.3	---	1.25	1760	59.0	67.0	70.0	0.43	0.52	0.62	11.2
1	0.75	1760	D56	2.94	M	6.7	3.3	2.8	0.1329	6	13	36.1	---	1.15	1760	62.0	69.0	72.0	0.46	0.57	0.65	14.0

FARM DUTY Motors - Auger Drive

Valid for lines:

TEFC - Single Phase - Auger Drive - Footless

Output		Rated Speed (rpm)	Frame	Full Load Torque (ft.lb)	Locked Rotor Current		Locked Rotor Torque Tl/Tn	Break-down Torque Tb/Tn	Inertia J (lb-ft²)	Allowable locked rotor time (s)		Weight (lb)	Sound dB(A)	Service Factor	115 V							
															Rated speed (rpm)	% of full load					Full load current In (A)
																Efficiency			Power Factor			
HP	kW				Code	Il/In				Hot	Cold					50	75	100	50	75	100	
0.33	0.25	1750	B56	0.980	N	5.8	3.4	2.8	0.0624	6	13	24.5	---	1.15	1750	49.0	58.0	61.0	0.44	0.53	0.62	5.60
0.5	0.37	1750	B56	1.48	L	5.8	2.9	2.7	0.0804	6	13	32.9	---	1.15	1750	56.0	64.0	66.5	0.46	0.57	0.65	7.40
0.75	0.55	1745	B56	2.23	M	6.2	3.0	2.5	0.0982	6	13	30.4	---	1.15	1745	58.5	66.0	68.5	0.47	0.58	0.66	10.6
1	0.75	1750	D56	2.96	M	6.5	3.2	2.7	0.1338	6	13	32.9	---	1.15	1750	60.0	67.0	70.3	0.45	0.56	0.65	14.0
1.5	1.1	1750	F56N	4.44	K	6.5	2.8	2.6	0.1955	6	13	32.9	---	1.15	1750	70.0	75.0	76.5	0.52	0.64	0.72	17.4

Data subject to change without notice.

Valid for lines:

TEFC - Three Phase – Double speed (1 Winding) - High Efficiency

Output		Rated Speed (rpm)	Frame	Full Load Torque (ft.lb)	Locked Rotor Current		Locked Rotor Torque Tl/Tn	Break-down Torque Tb/Tn	Inertia J (lb-ft²)	Allowable locked rotor time (s)		Weight (lb)	Sound dB(A)	Service Factor	460V							
															Rated speed (rpm)	% of full load						Full load current In (A)
																Efficiency			Power Factor			
HP	kW				Code	Il/In				Hot	Cold					50	75	100	50	75	100	
2	1.5	1720	143/5T	6.02	K	8.0	2.7	3.0	0.1590	6	13	50.7	51.0	1.00	1720	77.0	81.5	82.5	0.60	0.73	0.82	2.78
		1165	213T	8.89	M	9.0	3.0	3.2	1.55	16	35	143	55.0	1.00	1165	78.5	82.5	84.0	0.56	0.69	0.78	2.87
3	2.2	1755	182T	8.86	J	7.5	2.0	2.9	0.3821	10	22	97.0	58.0	1.00	1755	81.5	85.5	87.5	0.58	0.70	0.79	3.99
		1160	213/5T	13.4	K	8.0	3.2	2.8	1.90	12	26	165	55.0	1.00	1160	81.5	82.5	84.0	0.60	0.72	0.80	4.11
5	3.7	1750	182/4T	14.8	J	7.4	2.0	3.0	0.4461	7	15	101	58.0	1.00	1750	84.0	86.5	87.5	0.58	0.72	0.80	6.63
		1175	254T	22.0	J	7.0	2.5	3.0	3.92	18	40	265	59.0	1.00	1175	82.5	85.5	86.5	0.55	0.68	0.76	7.06
7.5	5.5	1765	213T	22.0	J	7.2	2.0	3.0	1.38	6	13	159	61.0	1.00	1765	85.5	87.5	88.5	0.64	0.77	0.82	9.51
		1175	254/6T	33.1	J	6.8	2.3	2.9	4.43	15	33	306	59.0	1.00	1175	84.0	86.5	87.5	0.58	0.70	0.78	10.1
10	7.5	1765	213/5T	29.4	J	7.0	1.9	3.0	1.56	6	13	163	61.0	1.00	1765	87.0	88.5	88.5	0.63	0.75	0.82	13.0
		1180	284T	43.9	H	7.2	2.5	3.0	7.85	13	29	419	59.0	1.00	1180	89.5	90.2	89.5	0.72	0.82	0.86	12.2
15	11	1765	254T	44.0	J	7.1	2.7	2.8	2.62	10	22	251	64.0	1.00	1765	86.5	88.5	89.5	0.61	0.73	0.81	19.0
		1180	284/6T	65.9	J	7.8	2.8	3.0	9.16	9	20	485	59.0	1.00	1180	91.0	90.2	90.2	0.70	0.81	0.85	18.0
20	15	1765	254/6T	58.7	J	7.1	2.8	2.8	3.10	8	18	298	64.0	1.00	1765	87.5	89.5	90.2	0.60	0.73	0.80	26.1
		1180	324T	87.8	H	7.0	2.3	3.0	9.79	10	22	496	62.0	1.00	1180	89.5	91.0	90.2	0.70	0.80	0.84	24.8
25	18.5	1770	284/6T	73.2	H	7.0	3.0	3.1	5.85	9	20	485	64.0	1.00	1770	88.5	91.7	91.7	0.71	0.82	0.86	29.4
		1180	324/6T	110	J	7.6	2.3	3.2	11.9	8	18	573	62.0	1.00	1180	87.5	89.5	90.2	0.72	0.82	0.86	29.9
30	22	1780	324T	87.3	J	8.1	2.7	2.8	7.85	11	24	512	68.0	1.00	1780	90.2	91.0	91.7	0.64	0.75	0.81	37.2
		1185	364/5T	131	J	7.9	2.8	3.0	23.5	12	26	816	66.0	1.00	1185	88.5	90.2	91.7	0.71	0.81	0.85	35.4
40	30	1780	326T	116	H	7.0	2.7	2.8	9.16	9	20	595	68.0	1.00	1780	91.5	92.4	92.4	0.70	0.80	0.85	47.9
		1780	324/6T	116	H	7.0	2.7	2.8	9.16	9	20	595	68.0	1.00	1780	91.5	92.4	92.4	0.70	0.80	0.85	47.9
		1185	364/5T	175	J	8.2	2.8	2.8	29.0	11	24	871	66.0	1.00	1185	90.2	91.7	92.4	0.73	0.82	0.86	47.4
50	37	1780	364/5T	146	K	8.8	3.1	3.5	19.9	8	18	937	70.0	1.00	1780	89.5	91.0	92.4	0.67	0.78	0.84	59.8
		1185	364/5T	219	K	8.6	3.0	3.0	32.4	9	20	966	66.0	1.00	1185	90.2	91.7	91.7	0.72	0.81	0.85	59.6
60	45	1780	364/5T	175	J	8.0	3.0	3.2	23.3	8	18	988	70.0	1.00	1780	91.0	92.4	93.0	0.72	0.82	0.86	70.6
75	55	1780	404/5T	218	J	8.0	2.9	3.0	27.4	8	18	1125	70.0	1.00	1780	91.7	92.4	93.0	0.74	0.82	0.87	85.3
100	75	1785	444/5T	290	J	8.0	2.4	3.0	70.5	18	40	1985	73.0	1.00	1785	91.0	93.0	94.1	0.70	0.80	0.84	119
125	90	1785	504/5T	363	J	8.5	2.9	3.4	87.3	15	33	1738	75.0	1.00	1785	90.2	91.9	92.4	0.71	0.80	0.84	146
160	120	1785	504/5T	464	K	8.6	2.9	3.4	95.4	10	22	1901	75.0	1.00	1785	90.7	92.2	92.5	0.71	0.80	0.84	194
200	150	1790	586/7T	579	H	7.6	2.2	2.5	298	25	55	3363	81.0	1.00	1790	90.5	92.6	93.1	0.75	0.83	0.87	232
250	185	1790	586/7T	724	H	7.3	2.1	2.3	335	25	55	3197	81.0	1.00	1790	91.6	93.2	93.5	0.76	0.84	0.87	285
300	220	1790	586/7T	868	H	7.3	2.1	2.3	373	25	55	3550	81.0	1.00	1790	92.1	93.6	93.8	0.79	0.85	0.88	335

Continued on next page

Cooling Tower Motors – Three-Phase - Double Speed continued

Valid for lines:

TEFC - Three Phase – Double speed (2 Windings) - High Efficiency

Output		Rated Speed (rpm)	Frame	Full Load Torque (ft.lb)	Locked Rotor Current		Locked Rotor Torque Tl/Tn	Break-down Torque Tb/Tn	Inertia J (lb-ft²)	Allowable locked rotor time (s)		Weight (lb)	Sound dB(A)	Service Factor	460V							
															Rated speed (rpm)	% of full load						Full load current In (A)
																Efficiency			Power Factor			
HP	kW				Code	Il/In				Hot	Cold					50	75	100	50	75	100	
5	3.7	1775	213/5T	14.6	J	7.3	1.8	3.0	1.56	10	22	176	61.0	1.00	1775	84.0	86.5	88.5	0.61	0.74	0.80	13.1
7.5	5.5	1770	254T	22.0	H	6.4	2.0	2.8	2.62	18	40	265	64.0	1.00	1770	85.5	87.5	88.5	0.64	0.75	0.80	19.5
10	7.5	1770	256T	29.3	J	7.2	1.8	2.4	2.96	17	37	309	64.0	1.00	1770	86.5	88.5	89.5	0.65	0.75	0.81	26.0
15	11	1765	284T	44.0	H	6.4	2.0	2.6	4.68	14	31	408	64.0	1.00	1765	87.5	88.5	90.2	0.68	0.77	0.82	37.3
20	15	1765	284/6T	58.7	G	6.0	1.9	2.4	5.85	14	31	485	64.0	1.00	1765	88.5	90.2	91.0	0.71	0.80	0.83	49.9
25	18.5	1780	324T	72.8	H	6.6	2.0	2.6	7.85	15	33	501	68.0	1.00	1780	89.5	91.0	91.7	0.67	0.77	0.82	61.8
30	22	1780	326T	87.3	H	7.0	2.2	2.6	9.16	15	33	595	68.0	1.00	1780	90.2	91.7	92.4	0.65	0.75	0.80	74.7
40	30	1780	364/5T	116	H	7.2	2.3	3.0	19.9	8	18	915	70.0	1.00	1780	89.5	91.0	92.4	0.74	0.83	0.87	93.7
50	37	1780	364/5T	146	J	8.0	2.7	3.0	23.3	8	18	988	70.0	1.00	1780	90.2	91.7	93.0	0.74	0.83	0.88	113
60	45	1780	364/5T	175	J	8.0	3.0	3.2	23.3	8	18	988	70.0	1.00	1780	91.0	92.4	93.0	0.72	0.82	0.86	141

Data subject to change without notice.

Valid for lines:

ODP - Three Phase - NEMA Design 'D'

Output		Rated Speed (rpm)	Frame	Full Load Torque (ft.lb)	Locked Rotor Current		Locked Rotor Torque Tl/Tn	Break-down Torque Tb/Tn	Inertia J (lb-ft²)	Allowable locked rotor time (s)		Weight (lb)	Sound dB(A)	460V							
															% of full load						
															Efficiency			Power Factor			
HP	kW				Code	Il/In				Hot	Cold			Rated speed (rpm)	50	75	100	50	75	100	Full load current In (A)
1.5	1.1	1125	184T	6.91	L	7.0	3.6	0.0	0.4435	12	26	58.9	---	1125	67.0	69.0	71.0	0.50	0.65	0.73	2.66
2	1.5	1125	184T	9.21	J	5.9	3.8	0.0	0.5323	14	31	69.9	---	1125	75.0	80.8	81.3	0.48	0.60	0.69	3.36
3	2.2	1115	213T	13.9	H	5.7	3.8	0.0	0.9198	22	48	88.2	---	1115	79.5	80.0	80.7	0.52	0.65	0.73	4.69
5	3.7	1135	215T	22.8	J	6.4	2.8	0.0	1.20	20	44	115	---	1135	84.1	85.1	85.5	0.57	0.69	0.76	7.15
7.5	5.5	1115	254T	34.8	G	6.0	3.2	0.0	2.39	11	24	221	56.0	1115	80.0	81.5	81.5	0.76	0.84	0.88	9.63
10	7.5	1110	256T	46.7	H	6.0	3.0	0.0	3.41	9	20	265	57.0	1110	83.0	84.0	83.0	0.65	0.78	0.84	13.5
15	11	1105	284T	70.3	G	6.2	2.8	0.0	5.24	15	33	331	58.0	1105	86.5	87.0	86.5	0.75	0.84	0.88	18.1
20	15	1110	286T	93.4	G	6.0	2.8	0.0	6.54	13	29	397	58.0	1110	86.5	87.0	86.5	0.81	0.87	0.89	24.5
25	18.5	1120	324T	116	G	5.4	2.8	0.0	7.88	28	62	485	60.0	1120	86.5	87.5	86.5	0.63	0.75	0.80	33.6
30	22	1120	326T	139	G	5.6	2.9	0.0	9.15	29	64	529	60.0	1120	88.0	88.5	88.5	0.64	0.75	0.80	39.0
40	30	1135	365T	183	G	5.6	2.8	0.0	21.8	31	68	750	67.0	1135	88.0	88.5	88.5	0.63	0.76	0.83	51.3
50	37	1125	405T	230	F	5.6	2.8	0.0	26.2	30	66	904	68.0	1125	88.5	89.0	88.5	0.71	0.81	0.85	61.7
60	45	1125	405T	276	G	5.7	2.8	0.0	27.9	25	55	930	69.0	1125	88.5	89.0	88.5	0.70	0.81	0.85	75.1
75	55	1130	445T	344	G	5.6	2.8	0.0	57.3	44	97	1342	69.0	1130	88.9	89.5	89.5	0.60	0.73	0.80	96.4
100	75	1130	445T	458	G	5.7	2.8	0.0	81.8	44	97	1742	77.0	1130	89.7	90.0	90.2	0.64	0.75	0.82	127

OIL WELL PUMPING – TEFC

Valid for lines:

TEFC - Three Phase - NEMA Design 'D'

Output		Rated Speed (rpm)	Frame	Full Load Torque (ft.lb)	Locked Rotor Current		Locked Rotor Torque Tl/Tn	Break-down Torque Tb/Tn	Inertia J (lb-ft²)	Allowable locked rotor time (s)		Weight (lb)	Sound dB(A)	460V							
														Rated speed (rpm)	% of full load						Full load current In (A)
															Efficiency			Power Factor			
HP	kW				Code	Il/In				Hot	Cold				50	75	100	50	75	100	
3	2.2	1060	215T	14.7	G	4.5	3.5	0.0	0.9200	19	42	125	55.0	1060	73.9	75.0	73.9	0.56	0.67	0.75	9.96
5	3.7	1070	215T	24.2	J	6.2	3.8	0.0	1.56	25	55	170	55.0	1070	77.5	78.1	77.5	0.61	0.73	0.81	14.8
		825	256T	31.4	J	6.3	3.0	0.0	3.41	17	37	266	54.0	825	75.5	77.0	77.0	0.64	0.76	0.83	14.5
7.5	5.5	1125	254T	34.5	H	6.8	3.2	0.0	3.07	14	31	247	59.0	1125	83.8	85.0	83.8	0.77	0.85	0.89	18.5
10	7.5	1110	256T	46.7	H	6.1	3.3	0.0	4.43	19	42	307	59.0	1110	82.0	82.0	80.0	0.82	0.88	0.90	26.1
		830	286T	62.4	H	5.8	3.2	0.0	6.22	28	62	382	54.0	830	82.5	83.0	82.5	0.70	0.80	0.82	27.8
15	11	1115	284T	69.7	G	6.1	3.0	0.0	7.20	16	35	391	59.0	1115	85.0	86.0	85.0	0.78	0.85	0.88	36.9
		850	324T	91.4	J	7.4	3.2	0.0	9.79	25	55	498	56.0	850	85.5	86.5	85.5	0.68	0.78	0.83	38.9
20	15	1115	286T	92.9	H	6.7	3.2	0.0	7.85	14	31	467	59.0	1115	86.0	87.0	86.0	0.78	0.85	0.89	49.2
		850	326T	122	J	6.9	3.0	0.0	11.9	25	55	570	56.0	850	85.5	86.5	85.5	0.70	0.80	0.84	52.4
25	18.5	1135	324T	114	H	6.8	3.2	0.0	10.6	16	35	523	62.0	1135	85.0	88.0	88.5	0.75	0.83	0.88	59.6
30	22	1135	326T	137	H	6.8	3.2	0.0	11.9	12	26	580	62.0	1135	85.6	89.0	89.4	0.76	0.83	0.87	71.0
40	30	1130	365T	183	G	5.5	2.9	0.0	26.8	34	75	809	65.0	1130	85.0	87.0	87.5	0.75	0.80	0.82	105
50	37	1135	404T	228	G	5.8	3.0	0.0	36.9	18	40	1043	65.0	1135	84.0	87.0	88.1	0.74	0.81	0.85	124
60	45	1140	405T	273	G	5.5	3.0	0.0	36.9	28	62	1125	65.0	1140	85.0	88.0	89.0	0.73	0.79	0.81	157
75	55	1130	444T	344	F	5.5	3.0	0.0	73.6	73	161	1586	70.0	1130	80.0	86.0	87.0	0.80	0.85	0.88	180
100	75	1130	445T	458	H	6.8	3.0	0.0	104	26	57	1897	70.0	1130	88.5	89.5	90.2	0.75	0.85	0.87	240

Data subject to change without notice.

Valid for lines:

Compressor Duty Motors

ODP - Single Phase – Foot Mount

Output		Rated Speed (rpm)	Frame	Full Load Torque (ft.lb)	Locked Rotor Current		Locked Rotor Torque Tl/Tn	Break-down Torque Tb/Tn	Inertia J (lb-ft²)	Allowable locked rotor time (s)		Weight (lb)	Sound dB(A)	Service Factor	230 V							
															Rated speed (rpm)	% of full load						Full load current In (A)
																Efficiency			Power Factor			
HP	kW				Code	Il/In				Hot	Cold					50	75	100	50	75	100	
0.5	0.37	3400	C56	0.760	H	4.6	2.5	2.9	0.0190	6	13	22.6	---	1.00	3400	53.0	59.0	63.0	0.61	0.71	0.77	3.30
0.75	0.55	3400	C56	1.14	H	4.7	2.5	1.9	0.0233	6	13	23.9	---	1.00	3400	62.0	65.0	66.0	0.61	0.72	0.80	4.60
1	0.75	3480	B56	1.49	J	5.6	1.8	2.5	0.0332	6	13	21.1	---	1.00	3480	59.0	65.0	67.0	0.59	0.70	0.78	6.10
1.5	1.1	3430	D56	2.27	H	5.2	2.0	1.9	0.0415	6	13	33.6	---	1.00	3430	64.0	68.0	68.0	0.68	0.78	0.84	8.40
2	1.5	3440	D56	3.01	J	5.7	2.1	1.9	0.0498	6	13	38.5	---	1.00	3440	67.0	70.0	70.0	0.67	0.77	0.84	11.0
3	2.2	3440	F56H	4.52	H	6.0	1.8	1.9	0.0664	6	13	42.0	---	1.00	3440	76.0	77.0	77.0	0.70	0.80	0.86	14.7
5	3.7	3460	G56H	7.49	G	6.8	2.6	2.2	0.0721	6	13	49.3	---	1.00	3460	83.0	85.0	85.0	0.99	0.99	0.99	19.0

SAW ARBOR MOTORS

Valid for lines:

TEFC - Three Phase - Right-Hand Thread
TEFC - Three Phase - Left-Hand Thread

Output		Rated Speed (rpm)	Frame	Full Load Torque (ft.lb)	Locked Rotor Current Il/In	Locked Rotor Torque Tl/Tn	Break-down Torque Tb/Tn	Inertia J (lb-ft²)	Allowable locked rotor time (s)		Weight (lb)	Sound dB(A)	230 V							
														% of full load						
														Efficiency			Power Factor			Full load current In (A)
kW	HP								Hot	Cold			Rated speed (rpm)	50	75	100	50	75	100	
2.2	3	3500	80S	4.44	7.3	3.3	3.7	0.0748	9	20	85.0	62	3500	76.0	79.5	80.5	0.65	0.75	0.80	8.58
3.7	5	3470	80M	7.47	8.0	3.4	4.1	0.0978	7	15	99.3	62	3470	82.0	84.5	85.0	0.66	0.77	0.82	13.3
		1740	90L	14.9	8.0	3.8	4.1	0.2660	8	18	143	51	1740	82.0	84.0	84.5	0.58	0.71	0.78	14.1
5.5	7.5	3490	80L	11.1	9.2	4	4.6	0.1436	5	11	120	62	3490	85.2	87.0	87.4	0.64	0.75	0.81	19.5
		1730	90L	22.5	8.2	3.7	4	0.3325	7	15	165	51	1730	83.5	85.0	85.3	0.60	0.74	0.80	20.3
7.5	10	3480	90L	14.9	8.5	4	4.2	0.3322	7	15	166	68	3480	82.0	84.5	85.0	0.77	0.86	0.90	24.6
		1720	90L	30.1	8.0	4	4	0.3989	6	13	178	51	1720	84.5	85.5	85.5	0.57	0.71	0.78	28.2

Data subject to change without notice.

Valid for lines:

TENV (IP55) - Three Phase Motor W22

Output		Frame	Full Load Torque (ft.lb)	Locked Rotor Current		Locked Rotor Torque Tl/Tn	Break-down Torque Tb/Tn	Inertia J (lb-ft2)	Weight (lb)	Sound dB(A)	Service Factor	460 V
HP	kW			Code	Il/In							Rated speed (rpm)
1	0.75	143TCZ	2.95	L	9.1	2.8	3.7	0.119635614	49	51	1.00	1765
1.5	1.1	145TCZ	4.39	L	9.1	2.9	3.6	0.146213403	55	51	1.00	1760
2	1.5	145TCZ	5.86	K	8.7	2.7	3.4	0.159514152	60	51	1.00	1755
3	2.2	182TCZ	8.77	J	7.7	2	3.4	0.412821108	97	58	1.00	1760
5	3.7	184TCZ	15.0	L	8.9	2.9	4.5	0.476337519	99	58	1.00	1765
7.5	5.5	213TCZ	21.8	J	7.6	2.4	3.2	1.378749477	168	61	1.00	1765
10	7.5	215TCZ	29.0	K	9.1	3	3.7	1.838324733	175	61	1.00	1770
15	11	254TCZ	43.4	L	8.35	3.6	3.75	3.746306508	296	66	1.00	1770
20	15	256TCZ	57.9	L	8.80	3.90	3.90	4.427466078	340	68	1.00	1765

Output		460 V								Equivalent Circuit (In Ohms per Phase at 20°C)				
HP	kW	Rated speed (rpm)	% of full load						Fullload current In (A)					
			Efficiency			Power Factor								
			50	75	100	50	75	100		R1	R2	X1	X2	XM
1	0.75	1765	82.5	85	85.5	0.58	0.71	0.79	1.37	10.16	4.59	13.44	17.81	360.77
1.5	1.1	1760	84.9	86.5	86.5	0.61	0.73	0.81	1.98	6.76	3.36	9.69	12.75	248.32
2	1.5	1755	86.1	86.5	86.5	0.64	0.76	0.83	2.58	5.4	2.83	8.12	10.31	207.72
3	2.2	1760	87.66	89.2	89.5	0.60	0.72	0.79	3.91	2.33	1.71	5.59	6.63	126.01
5	3.7	1765	87.8	89.5	89.5	0.51	0.65	0.73	6.98	1.04	0.9	2.78	3.5	59.92
7.5	5.5	1765	90.1	91.7	91.7	0.67	0.78	0.84	9.08	0.87	0.59	1.85	3.65	65.97
10	7.5	1770	90.3	91.6	91.7	0.64	0.76	0.82	12.3	0.56	0.38	1.17	2.56	44.54
15	11	1770	91.3	92.4	92.4	0.56	0.70	0.77	19.3	0.34	0.22	0.73	1.37	23.88
20	15	1765	92.4	93.0	93.0	0.55	0.69	0.77	26.0	0.21	0.16	0.52	1.03	17.74

WASH DOWN DUTY – SHARK™ – STAINLESS STEEL

Valid for lines:

TEFC - Three-Phase - C-Face Foot Mount - NEMA Premium

Output		Frame	Full Load Torque (ft.lb)	Locked Rotor Current		Locked Rotor Torque Tl/Tn	Break-down Torque Tb/Tn	Weight (lb)	Service Factor	460 V							
										Rated speed (rpm)	% of full load						Full load current In (A)
											Efficiency			Power Factor			
HP	kW			Code	Il/In						50	75	100	50	75	100	
1	0.75	143T	3.01	K	11	2.8	3.0	39	1.15	1720	83.2	84.76	85.5	58.2	70.71	78	1.40
2	1.1	143T	2.30	K	9.1	1.8	2.5	70	1.15	3435	84.71	85.05	84	75.23	84.45	84	1.98
		145T	4.59	J	8.7	2.5	2.8	49	1.15	1720	85.13	86.35	86.5	60.71	72.62	78	2.08
		145T	3.02	J	8.5	1.7	2.4	52	1.15	3480	86.12	86.15	85.5	81.43	88.05	85	2.58
		145T	6.04	J	7.9	2.4	2.7	95	1.15	1740	86.25	86.82	86.5	64.19	75.15	78	2.78
3	2.2	182T	4.47	J	8.4	1.6	2.3	102	1.15	3530	86.36	87.25	86.5	76.54	85.87	87	3.71
		182T	8.96	J	8.5	2.2	2.5	116	1.15	1760	88.18	89.42	89.5	71.23	81.18	86	3.65
5	3.7	184T	7.45	H	7.7	1.5	2.2	116	1.15	3530	88.63	88.91	88.5	81.08	87.78	88	6.01
		184T	15.0	H	7.2	1.9	2.2	175	1.15	1750	88.61	89.32	89.5	72.61	82.35	86	6.08
7.5	5.5	213T	11.2	H	6.7	1.4	2.0	190	1.15	3530	89.45	89.82	89.7	83.45	89.13	88	8.90
		213T	22.3	G	6.7	1.8	2.2	202	1.15	1770	91.12	91.63	91.7	73.55	82.84	85	9.01
10	7.5	215T	14.9	G	6.8	1.4	2.0	202	1.15	3530	90.25	90.76	90.2	86.43	90.15	88	11.77
		215T	29.8	F	6.2	1.7	2.0	207	1.15	1765	91.41	91.85	91.7	76.76	84.52	85	12.01

Data subject to change without notice.

Valid for lines:

TEFC - Three-Phase - C-Face Foot Mount - High Efficiency

TEFC - Three-Phase - C-Face Footless - High Efficiency

Output		Frame	Full Load Torque (ft.lb)	Locked Rotor Current		Locked Rotor Torque Tl/Tn	Break-down Torque Tb/Tn	Weight (lb)	Service Factor	460 V							
										Rated speed (rpm)	% of full load						Full load current In (A)
											Efficiency			Power Factor			
HP	kW			Code	Il/In						50	75	100	50	75	100	
0.33	0.25	56C	1.01	K	17	3.0	3.0	40	1.15	1730	75.0	75.5	73.0	70.0	65.2	51.8	0.59
0.50	0.37	56C	0.76	K	13	2.3	2.8	42	1.15	3460	74.0	77.0	74.9	82.0	80.1	69.1	0.77
		56C	1.52	J	12	2.5	3.0	47	1.15	1730	77.0	77.8	75.9	74.0	69.6	56.5	0.82
		56C	2.32	G	10	1.8	2.7	63	1.15	1130	74.0	75.9	73.5	66.0	59.0	46.3	0.96
0.75	0.55	56C	1.15	H	11	2.0	2.8	47	1.15	3420	75.5	78.1	76.9	83.0	81.8	71.3	1.12
		56C	2.28	J	10	2.8	3.0	52	1.15	1720	78.0	79.4	78.0	74.0	71.1	58.4	1.22
		56HC	3.49	G	9.2	1.8	2.7	64	1.15	1130	77.0	79.7	77.6	67.0	60.1	47.2	1.36
1	0.75	56HC	1.52	J	11	1.9	2.5	57	1.15	3450	82.5	81.1	79.7	84.0	85.0	75.5	1.35
		143T	3.04	H	9.9	2.5	2.8	75	1.15	1720	82.5	82.9	81.7	75.0	71.9	59.2	1.52
		56HC	3.04	H	9.9	2.5	2.8	59	1.15	1720	82.5	82.9	81.7	75.0	71.9	59.2	1.52
		145T	4.65	G	8.7	1.7	2.7	75	1.15	1130	80.0	80.7	78.8	68.0	60.1	47.1	1.72
		56HC	4.65	G	8.7	1.7	2.7	59	1.15	1130	80.0	80.7	78.8	68.0	60.1	47.1	1.72
1.5	1.1	143T	2.30	H	9.9	1.8	2.5	72	1.15	3430	82.5	82.9	82.2	84.0	86.2	77.8	2.03
		56HC	2.30	H	9.9	1.8	2.5	63	1.15	3430	82.5	82.9	82.2	84.0	86.2	77.8	2.03
		145T	4.59	F	9.4	2.5	2.8	62	1.15	1710	84.0	84.6	83.9	79.0	75.5	63.5	2.12
		56HC	4.59	F	9.4	2.5	2.8	64	1.15	1710	84.0	84.6	83.9	79.0	75.5	63.5	2.12
2	1.5	145T	3.05	H	9.7	1.7	2.4	82	1.15	3440	84.0	84.6	84.0	86.0	89.2	82.7	2.59
		56HC	3.05	H	9.7	1.7	2.4	78	1.15	3440	84.0	84.6	84.0	86.0	89.2	82.7	2.59
		145T	6.13	F	9.0	2.4	2.7	80	1.15	1710	84.0	85.6	85.0	80.0	76.8	65.2	2.78
		56HC	6.13	F	9.0	2.4	2.7	78	1.15	1710	84.0	85.6	85.0	80.0	76.8	65.2	2.78
3	2.2	145T	4.54	J	8.4	1.6	2.3	90	1.15	3470	85.5	85.9	84.9	86.0	89.7	83.3	3.82
		182T	4.49	J	8.5	1.6	2.3	95	1.15	3510	85.5	85.7	84.6	87.0	88.7	81.8	3.78
		182T	8.90	K	7.7	2.2	2.5	102	1.15	1760	87.5	88.0	86.6	77.0	75.3	63.2	4.17
5	3.7	184T	7.5	H	7.6	1.5	2.2	115	1.15	3500	87.1	87.8	87.5	83.4	89.6	88.0	6.08
		184T	14.92	H	6.9	1.9	2.2	130	1.15	1750	88.1	88.7	87.5	69.4	79.8	80.0	6.69
7 1/2	5.5	213T	11.23	H	7.2	1.4	2.0	175	1.15	3510	87.6	88.5	88.5	84.6	90.0	89.0	8.92
		213T	22.39	C	6.9	1.8	2.2	190	1.15	1760	89.4	90.1	89.5	73.1	81.9	84.0	9.28
10	7.5	215T	14.97	G	7.0	1.4	2.0	202	1.15	3510	89.0	89.7	89.5	87.8	91.7	90.0	11.62
		215T	29.85	B	6.5	1.7	2.0	207	1.15	1760	90.2	90.7	89.5	75.8	83.6	84.0	12.45

ATEX MOTORS

Valid for lines:

TEFC - Exn-A - IE3

Output		Rated Speed (rpm)	Frame	Full Load Torque (ft.lb)	Locked Rotor Current Il/In	Locked Rotor Torque Tl/Tn	Break-down Torque Tb/Tn	Inertia J (lb-ft2)	Allowable locked rotor time (s)		Weight (lb)	Sound dB(A)	415 V							
														% of full load						
														Efficiency			Power Factor			
kW	HP								Hot	Cold			Rated speed (rpm)	50	75	100	50	75	100	Full load current In (A)
0.12	0.16	2835	63	0.300	5.4	3.3	3.3	0.0033	30	66	13.7	52.0	2835	57.0	62.4	64.9	0.51	0.64	0.73	0.352
		1380	63	0.620	4.4	2.1	2.3	0.0104	30	66	11.5	44.0	1380	55.6	61.3	62.9	0.50	0.62	0.72	0.369
		910	63	0.930	3.1	1.8	2.1	0.0157	30	66	17.0	43.0	910	43.9	51.4	54.2	0.42	0.52	0.61	0.505
		655	71	1.30	2.4	1.8	2.0	0.0223	30	66	25.4	41.0	655	41.8	48.2	51.4	0.34	0.41	0.48	0.677
0.18	0.25	2815	63	0.450	5.2	3.2	3.2	0.0038	22	48	14.8	52.0	2815	59.6	65.2	66.7	0.51	0.64	0.74	0.507
		1380	63	0.930	4.7	2.3	2.4	0.0145	30	66	15.9	44.0	1380	60.8	63.5	64.5	0.50	0.63	0.72	0.539
		910	71	1.41	3.2	2.0	2.1	0.0221	30	66	25.4	43.0	910	54.5	61.2	61.9	0.38	0.48	0.57	0.710
		685	80	1.87	3.3	2.0	2.2	0.0681	30	66	29.8	42.0	685	49.3	56.0	58.2	0.43	0.53	0.62	0.694
0.25	0.33	2820	63	0.630	5.5	3.2	3.2	0.0047	17	37	15.9	52.0	2820	61.5	67.2	68.7	0.51	0.64	0.74	0.684
		1380	71	1.29	4.8	2.5	2.6	0.0157	30	66	17.6	43.0	1380	65.1	68.6	69.7	0.50	0.62	0.71	0.703
		890	71	2.00	3.2	2.0	2.0	0.0223	30	66	25.4	43.0	890	57.6	62.8	63.8	0.37	0.48	0.57	0.956
		685	80	2.59	3.3	2.0	2.2	0.0802	30	66	32.0	42.0	685	51.3	56.9	59.7	0.43	0.53	0.63	0.925
0.37	0.5	2805	71	0.930	6.2	3.0	3.0	0.0095	15	33	16.5	56.0	2805	72.4	74.5	75.0	0.63	0.76	0.83	0.827
		1380	71	1.90	4.8	2.6	2.6	0.0195	30	66	20.9	43.0	1380	67.8	71.5	72.3	0.48	0.61	0.71	1.00
		930	80	2.82	4.5	1.9	2.1	0.0600	25	55	27.6	43.0	930	64.3	68.8	69.7	0.48	0.62	0.72	1.03
		695	90S	3.78	3.7	2.1	2.4	0.1305	30	66	41.9	43.0	695	59.0	64.7	65.7	0.39	0.50	0.59	1.33
0.55	0.75	2790	71	1.40	5.9	3.0	3.0	0.0112	18	40	18.7	56.0	2790	74.4	76.0	76.5	0.65	0.78	0.84	1.19
		1430	80	2.73	6.6	2.9	3.2	0.0605	20	44	27.6	44.0	1430	76.0	78.9	80.1	0.57	0.71	0.77	1.24
		930	80	4.19	4.8	2.2	2.2	0.0802	19	42	32.0	43.0	930	66.0	71.6	73.1	0.47	0.61	0.71	1.47
		690	90L	5.66	3.6	1.8	2.1	0.1566	29	64	50.7	43.0	690	61.4	65.7	66.6	0.42	0.54	0.64	1.80
0.75	1	2835	80	1.87	7.5	3.5	3.5	0.0180	25	55	29.8	59.0	2835	79.1	81.7	82.1	0.59	0.72	0.79	1.61
		1425	80	3.72	6.7	3.0	3.3	0.0838	18	40	32.0	44.0	1425	79.1	81.8	82.8	0.60	0.73	0.80	1.58
		945	L90S	5.62	5.2	2.5	2.8	0.1566	31	68	48.5	45.0	945	75.3	78.6	79.1	0.46	0.59	0.69	1.91
		715	100L	7.44	4.6	1.9	2.3	0.3014	30	66	67.3	50.0	715	71.1	74.8	75.5	0.38	0.50	0.59	2.34
1.1	1.5	2840	80	2.74	7.4	3.6	3.6	0.0356	23	51	33.1	59.0	2840	80.0	83.0	83.4	0.58	0.72	0.79	2.32
		950	100L	8.20	4.9	2.0	2.4	0.2610	32	70	62.8	44.0	950	79.9	80.9	81.5	0.48	0.62	0.70	2.68
		710	100L	11.0	4.6	2.1	2.4	0.3393	30	66	72.8	50.0	710	71.1	74.9	75.7	0.38	0.50	0.59	3.43
1.5	2	2885	90S	3.68	7.6	3.3	3.3	0.0475	15	33	40.8	62.0	2885	82.2	84.8	85.2	0.59	0.72	0.80	3.06
		1455	90L	7.29	7.4	2.6	3.4	0.1566	13	29	50.7	49.0	1455	83.1	85.7	86.1	0.54	0.68	0.77	3.15
		955	100L	11.1	5.5	2.3	2.8	0.3393	31	68	70.6	44.0	955	80.6	82.3	82.8	0.46	0.59	0.68	3.71
		710	112M	15.0	5.0	2.5	2.8	0.5648	28	62	94.8	46.0	710	77.9	80.2	80.8	0.42	0.56	0.65	3.97
2.2	3	2880	90L	5.40	7.5	3.4	3.5	0.0617	12	26	51.8	62.0	2880	85.3	86.4	86.5	0.61	0.74	0.81	4.37
		1440	100L	10.8	7.4	3.2	3.5	0.2136	18	40	69.5	53.0	1440	85.7	86.8	87.2	0.57	0.70	0.78	4.50
		955	112M	16.3	6.0	2.5	2.6	0.6099	26	57	92.6	48.0	955	82.3	84.3	84.7	0.50	0.62	0.70	5.16
		715	132S	21.8	6.2	2.3	2.5	1.64	27	59	152	48.0	715	81.2	82.3	82.9	0.48	0.62	0.70	5.27

Continued on next page

Data subject to change without notice.

Valid for lines:

TEFC - Exn-A - IE3

Output		Rated Speed (rpm)	Frame	Full Load Torque (ft.lb)	Locked Rotor Current Il/In	Locked Rotor Torque Tl/Tn	Break-down Torque Tb/Tn	Inertia J (lb-ft2)	Allowable locked rotor time (s)		Weight (lb)	Sound dB(A)	415 V							
														% of full load						
														Efficiency			Power Factor			
kW	HP								Hot	Cold			Rated speed (rpm)	50	75	100	50	75	100	Full load current In (A)
3	4	2915	100L	7.27	8.5	3.4	3.4	0.1519	15	33	70.6	67.0	2915	85.0	87.2	87.4	0.66	0.78	0.84	5.68
		1445	L100L	14.7	7.8	3.5	3.7	0.2848	15	33	82.7	53.0	1445	86.3	87.7	88.1	0.56	0.70	0.78	6.07
		975	132S	21.8	6.0	1.9	2.5	1.07	28	62	135	53.0	975	85.8	87.8	87.8	0.49	0.62	0.71	6.70
		715	132M	29.8	6.4	2.4	2.6	1.99	21	46	165	48.0	715	81.5	83.2	83.7	0.48	0.61	0.70	7.12
4	5.5	2905	112M	9.72	7.7	2.9	3.5	0.1898	22	48	90.4	64.0	2905	87.5	89.0	89.6	0.65	0.77	0.84	7.39
		1455	112M	19.4	7.0	2.3	3.1	0.4312	15	33	97.0	56.0	1455	88.2	88.9	89.3	0.59	0.72	0.79	7.89
		965	132M	29.4	6.5	2.2	2.5	1.34	30	66	146	52.0	965	85.4	86.6	86.9	0.50	0.63	0.71	9.02
		730	160M	38.9	5.0	2.1	2.3	2.39	34	75	251	51.0	730	84.4	86.6	86.8	0.49	0.62	0.70	8.21
5.5	7.5	2935	132S	13.2	8.3	2.6	3.2	0.5126	23	51	143	67.0	2935	87.8	89.6	90.1	0.68	0.79	0.85	10.0
		1470	132S	26.5	8.5	2.4	3.4	1.25	15	33	152	56.0	1470	89.6	90.7	90.8	0.64	0.76	0.83	10.2
		730	160M	53.5	5.0	2.1	2.3	2.90	28	62	271	51.0	730	85.2	87.0	87.8	0.49	0.62	0.71	12.3
7.5	10	2940	132S	18.0	8.5	3.0	3.4	0.5980	17	37	152	67.0	2940	88.6	90.3	90.8	0.65	0.77	0.83	13.8
		1470	132M	36.1	8.5	2.5	3.4	1.52	13	29	172	56.0	1470	90.5	91.4	91.7	0.65	0.77	0.84	13.5
		975	160M	54.2	6.5	2.3	2.9	2.90	20	44	269	56.0	975	88.8	90.2	90.8	0.60	0.71	0.79	14.5
		730	160L	72.4	5.3	2.2	2.5	3.75	22	48	320	51.0	730	86.2	88.0	88.9	0.49	0.62	0.71	16.5
9.2	12.5	2935	132M	22.1	8.5	2.9	3.3	0.7261	16	35	172	67.0	2935	90.1	91.0	91.3	0.71	0.82	0.87	16.1
		1475	160M	44.0	7.2	2.5	3.0	1.91	16	35	240	61.0	1475	89.5	91.2	91.9	0.63	0.74	0.81	17.2
		975	160L	66.5	6.5	2.3	2.9	3.41	18	40	302	56.0	975	89.6	90.5	91.2	0.61	0.73	0.79	17.8
		730	180M	89.4	6.0	2.0	2.6	6.11	15	33	381	51.0	730	88.6	89.3	90.0	0.60	0.73	0.80	17.8
11	15	2955	160M	26.3	8.0	2.7	3.5	0.9943	17	37	254	67.0	2955	90.7	92.2	92.8	0.68	0.79	0.83	19.9
		1470	160M	52.7	7.0	2.5	3.0	2.38	17	37	271	61.0	1470	90.7	91.7	92.3	0.62	0.74	0.81	20.5
		975	160L	79.5	6.5	2.4	3.0	3.75	16	35	315	56.0	975	89.5	90.7	91.3	0.59	0.71	0.79	21.2
		725	180L	107	6.5	2.3	2.7	6.75	12	26	408	51.0	725	89.0	89.9	90.5	0.52	0.65	0.74	22.9
15	20	2955	160M	35.8	8.0	2.6	3.3	1.12	12	26	262	67.0	2955	91.2	92.4	93.0	0.68	0.79	0.84	26.7
		1470	160L	71.9	7.3	2.7	3.2	2.88	10	22	320	61.0	1470	91.4	92.4	93.0	0.62	0.74	0.80	28.0
		975	180L	108	7.7	2.6	3.2	7.69	10	22	426	56.0	975	91.6	92.0	92.3	0.69	0.80	0.85	26.6
		730	200L	145	4.9	1.9	2.1	10.8	34	75	518	56.0	730	89.4	90.8	91.5	0.53	0.65	0.72	31.7
18.5	25	2955	160L	44.2	8.4	2.8	3.6	1.32	8	18	300	67.0	2955	91.6	92.8	93.3	0.66	0.77	0.84	32.8
		1470	180M	88.7	7.3	2.7	3.0	4.75	20	44	397	61.0	1470	91.8	92.8	93.4	0.61	0.73	0.80	34.4
		980	200L	133	6.2	2.2	2.8	9.16	19	42	492	60.0	980	91.2	92.1	92.6	0.61	0.73	0.80	34.7
		735	225S/M	177	6.5	1.7	2.5	26.3	28	62	831	56.0	735	92.8	93.0	92.9	0.60	0.73	0.80	34.6
22	30	2960	180M	52.5	8.0	2.5	3.3	2.83	11	24	388	67.0	2960	92.3	93.3	93.8	0.70	0.80	0.86	37.9
		1470	180L	105	7.3	2.8	3.3	5.39	18	40	437	61.0	1470	91.9	92.8	93.6	0.62	0.74	0.81	40.4
		980	200L	158	6.3	2.3	2.9	10.8	18	40	529	60.0	980	91.4	92.4	92.9	0.61	0.73	0.80	41.2
		735	225S/M	211	6.5	1.8	2.5	30.6	22	48	886	56.0	735	92.8	93.1	93.2	0.60	0.73	0.79	41.6

Continued on next page

ATEX MOTORS continued

Valid for lines:

TEFC - Exn-A - IE3

Output		Rated Speed (rpm)	Frame	Full Load Torque (ft.lb)	Locked Rotor Current Il/In	Locked Rotor Torque Tl/Tn	Break-down Torque Tb/Tn	Inertia J (lb-ft2)	Allowable locked rotor time (s)		Weight (lb)	Sound dB(A)	415 V							
														% of full load						
														Efficiency			Power Factor			
kW	HP								Hot	Cold			Rated speed (rpm)	50	75	100	50	75	100	Full load current In (A)
30	40	2970	200L	71.3	7.3	2.6	2.9	4.44	20	44	538	69.0	2970	92.6	93.9	94.2	0.69	0.79	0.84	52.7
		1480	200L	143	7.3	2.5	3.0	8.23	16	35	536	63.0	1480	92.4	93.4	94.2	0.60	0.72	0.80	55.4
		985	225S/M	215	7.4	2.3	2.8	30.6	17	37	884	63.0	985	93.5	94.0	94.2	0.67	0.78	0.84	52.7
		735	250S/M	288	7.4	1.9	2.8	33.9	18	40	1080	56.0	735	93.1	93.3	93.4	0.63	0.75	0.85	52.6
37	50	2970	200L	87.9	7.3	2.6	2.9	5.03	17	37	584	69.0	2970	93.1	93.9	94.7	0.69	0.79	0.84	64.7
		1480	225S/M	176	7.8	2.7	3.0	20.9	14	31	864	63.0	1480	93.8	94.6	94.7	0.69	0.79	0.85	63.9
		985	250S/M	265	7.4	2.3	2.7	33.8	17	37	1072	64.0	985	93.8	94.4	94.6	0.69	0.79	0.84	64.8
		740	280S/M	352	6.0	1.8	2.3	66.9	32	70	1484	59.0	740	93.4	94.1	94.3	0.60	0.71	0.77	70.9
45	60	2970	225S/M	107	8.0	2.4	3.2	10.5	12	26	917	74.0	2970	94.5	95.2	95.3	0.75	0.84	0.88	74.6
		1480	225S/M	214	7.9	2.8	3.2	22.6	13	29	926	63.0	1480	94.0	94.8	94.8	0.67	0.78	0.84	78.6
		990	280S/M	320	6.8	2.2	2.7	66.5	32	70	1495	65.0	990	93.9	94.8	95.1	0.62	0.74	0.81	81.3
		740	280S/M	429	6.0	1.8	2.2	82.8	30	66	1634	59.0	740	93.8	94.5	94.7	0.60	0.71	0.78	84.8
55	75	2965	250S/M	131	7.9	2.8	2.9	11.6	14	31	1069	74.0	2965	94.8	95.3	95.5	0.78	0.85	0.88	91.0
		1480	250S/M	262	7.9	2.8	3.3	26.3	14	31	1118	64.0	1480	94.4	94.9	95.4	0.68	0.79	0.85	94.4
		990	280S/M	392	6.7	2.2	2.7	77.1	28	62	1594	65.0	990	94.3	95.0	95.4	0.64	0.75	0.81	99.0
		740	315S/M	524	6.0	1.7	2.2	74.6	40	88	2064	62.0	740	94.0	94.7	94.9	0.62	0.73	0.79	102
75	100	2980	280S/M	177	7.6	2.3	2.9	28.6	32	70	1603	77.0	2980	94.4	95.3	95.7	0.80	0.87	0.90	121
		1485	280S/M	356	7.6	2.3	2.8	53.5	26	57	1607	69.0	1485	94.6	95.2	95.7	0.73	0.82	0.86	127
		990	315S/M	534	6.7	2.2	2.6	79.2	32	70	2121	67.0	990	94.8	95.6	95.9	0.64	0.76	0.82	133
		740	315S/M	714	6.0	1.8	2.2	95.7	40	88	2313	62.0	740	94.4	95.1	95.2	0.62	0.73	0.79	139
90	125	2980	280S/M	213	7.4	2.2	2.8	31.8	30	66	1680	77.0	2980	94.7	95.6	95.9	0.82	0.88	0.90	145
		1485	280S/M	427	7.4	2.3	2.8	60.6	25	55	1713	69.0	1485	94.9	95.5	95.9	0.72	0.81	0.85	154
		990	315S/M	641	6.7	2.2	2.5	94.8	34	75	2311	67.0	990	95.2	95.8	96.2	0.64	0.76	0.82	159
		740	315S/M	857	6.0	1.9	2.2	114	40	88	2534	62.0	740	94.7	95.1	95.4	0.62	0.73	0.79	166
110	150	2980	315S/M	260	7.6	2.1	3.0	29.2	30	66	2121	77.0	2980	94.6	95.7	96.1	0.78	0.86	0.88	181
		1490	315S/M	520	7.5	2.6	2.7	58.7	30	66	2227	71.0	1490	95.2	95.8	96.3	0.71	0.81	0.85	187
		990	315S/M	783	6.8	2.4	2.6	105	32	70	2439	67.0	990	95.3	96.0	96.3	0.64	0.76	0.82	194
		740	315L	1048	6.0	1.9	2.2	298	35	77	3014	68.0	740	94.8	95.3	95.5	0.61	0.72	0.78	205
		745	355M/L	1041	6.2	1.3	2.3	298	56	123	3272	70.0	745	93.0	95.2	95.2	0.59	0.77	0.77	209
132	175	2980	315S/M	312	7.5	2.1	2.8	35.2	30	66	2311	77.0	2980	95.1	95.9	96.4	0.81	0.88	0.90	212
		1490	315S/M	624	7.6	2.5	2.6	69.7	26	57	2414	71.0	1490	95.3	95.9	96.4	0.72	0.81	0.85	224
		990	315S/M	940	7.2	2.5	2.7	121	26	57	2624	67.0	990	95.4	96.0	96.3	0.64	0.75	0.81	235
		740	315L	1257	6.0	2.0	2.3	313	34	75	3325	68.0	740	95.1	95.6	95.8	0.61	0.72	0.78	246
		745	355M/L	1249	6.2	1.3	2.3	343	48	106	3499	70.0	745	93.5	95.4	95.4	0.60	0.71	0.77	250
150	200	990	315L	1068	7.1	2.5	2.8	264	25	55	3010	68.0	990	95.5	96.1	96.4	0.64	0.76	0.82	264

Continued on next page

Data subject to change without notice.

Valid for lines:

TEFC - Exn-A - IE3

Output		Rated Speed (rpm)	Frame	Full Load Torque (ft.lb)	Locked Rotor Current Il/In	Locked Rotor Torque Tl/Tn	Break-down Torque Tb/Tn	Inertia J (lb-ft2)	Allowable locked rotor time (s)		Weight (lb)	Sound dB(A)	415 V							
													Rated speed (rpm)	% of full load						Full load current In (A)
														Efficiency			Power Factor			
kW	HP								Hot	Cold				50	75	100	50	75	100	
160	220	2980	315S/M	378	7.9	2.3	2.8	41.2	24	53	2489	77.0	2980	95.5	96.2	96.7	0.81	0.88	0.91	253
		1490	315S/M	757	7.6	2.6	2.6	76.9	22	48	2540	71.0	1490	95.5	96.2	96.6	0.72	0.81	0.86	268
		990	315L	1139	7.4	2.6	2.7	264	24	53	3193	68.0	990	95.5	96.1	96.4	0.64	0.76	0.82	282
		995	355M/L	1139	6.5	2.1	2.3	242	33	73	3515	73.0	995	94.1	95.1	95.7	0.60	0.72	0.79	294
		745	355M/L	1514	6.4	1.3	2.3	410	56	123	3852	70.0	745	95.1	95.7	96.0	0.61	0.73	0.78	297
185	250	2980	315S/M	438	7.8	2.4	2.7	44.0	22	48	2639	77.0	2980	95.6	96.4	96.7	0.81	0.88	0.90	296
		1490	315S/M	875	7.6	2.5	2.5	82.2	18	40	2695	71.0	1490	95.6	96.3	96.5	0.71	0.81	0.86	310
		990	355M/L	1317	6.6	2.2	2.4	264	34	75	3674	73.0	990	94.5	95.5	95.8	0.61	0.72	0.77	349
		745	355M/L	1750	6.3	1.3	2.3	440	56	123	4011	70.0	745	95.2	95.7	96.0	0.60	0.72	0.78	344
200	270	2980	315L	473	8.2	2.6	2.8	51.4	17	37	2878	78.0	2980	95.9	96.5	96.8	0.81	0.88	0.90	319
		2985	355M/L	472	7.5	1.9	2.6	102	28	62	3389	80.0	2985	93.5	95.1	95.8	0.88	0.90	0.91	319
		1490	315L	946	7.6	2.5	2.5	93.4	20	44	2937	73.0	1490	95.9	96.5	96.7	0.71	0.81	0.86	335
		1490	355M/L	946	7.6	2.5	2.5	166	22	48	3296	74.0	1490	95.7	96.4	96.7	0.69	0.79	0.84	343
		995	355M/L	1417	6.5	2.1	2.3	286	40	88	3834	73.0	995	95.2	95.9	96.2	0.61	0.73	0.79	366
		745	355M/L	1892	6.2	1.3	2.3	449	56	123	4170	70.0	745	95.3	96.0	96.1	0.61	0.73	0.78	371
220	300	2980	315L	520	7.7	2.4	2.6	123	24	53	3021	78.0	2980	96.1	96.5	96.8	0.83	0.88	0.91	347
		2990	355M/L	519	7.7	2.0	2.7	109	22	48	3495	80.0	2990	95.0	96.0	96.3	0.83	0.89	0.91	349
		1490	315L	1041	7.8	2.6	2.6	163	16	35	3153	73.0	1490	95.9	96.5	96.7	0.71	0.81	0.85	372
		1490	355M/L	1041	7.4	2.4	2.5	178	20	44	3427	74.0	1490	95.8	96.5	96.8	0.69	0.78	0.84	376
		995	355M/L	1558	6.5	2.2	2.3	318	36	79	4088	73.0	995	95.3	96.0	96.3	0.61	0.73	0.79	402
250	340	2980	315L	591	7.8	2.5	2.7	108	17	37	3162	78.0	2980	96.4	96.7	96.9	0.85	0.89	0.91	394
		2985	355M/L	590	7.7	2.1	2.8	120	22	48	3671	80.0	2985	95.4	96.3	96.4	0.86	0.91	0.92	392
		1490	315L	1183	8.0	2.7	2.6	199	16	35	3367	73.0	1490	96.0	96.5	96.9	0.70	0.80	0.85	422
		1490	355M/L	1183	7.3	2.3	2.4	204	16	35	3574	74.0	1490	96.0	96.6	96.9	0.70	0.80	0.84	427
		995	355M/L	1771	6.5	2.3	2.4	356	38	84	4344	73.0	995	95.3	96.0	96.3	0.61	0.73	0.79	457
260	350	2980	315L	615	7.8	2.5	2.7	108	17	37	3162	78.0	2980	96.4	96.7	96.9	0.85	0.89	0.91	410
		2985	355M/L	614	7.7	2.1	2.8	120	22	48	3671	80.0	2985	95.4	96.3	96.4	0.86	0.91	0.92	408
		1490	315L	1230	8.0	2.7	2.6	199	16	35	3367	73.0	1490	96.0	96.5	96.9	0.70	0.80	0.85	439
		1490	355M/L	1230	7.3	2.3	2.4	204	16	35	3574	74.0	1490	96.0	96.6	96.9	0.70	0.80	0.84	444
		995	355M/L	1842	6.5	2.3	2.4	356	38	84	4344	73.0	995	95.3	96.0	96.3	0.61	0.73	0.79	475
280	380	2980	315L	662	8.0	2.6	3.0	102	22	48	3330	78.0	2980	96.2	96.8	96.8	0.85	0.89	0.90	447
		2980	355M/L	662	7.5	2.0	2.4	132	20	44	3861	80.0	2980	95.2	95.6	95.8	0.83	0.88	0.91	447
		1490	355M/L	1324	7.3	2.3	2.4	229	20	44	3737	74.0	1490	96.2	96.7	97.0	0.71	0.81	0.85	472
		995	355M/L	1983	5.5	2.0	2.4	356	38	84	4344	73.0	995	94.9	96.1	96.5	0.61	0.73	0.78	518
315	430	2985	355M/L	745	7.7	2.1	2.5	142	18	40	4053	80.0	2985	95.2	95.6	95.8	0.86	0.90	0.92	497
		1490	355M/L	1490	7.3	2.3	2.4	254	22	48	3907	74.0	1490	96.3	96.7	97.0	0.71	0.81	0.85	532
355	480	1490	355M/L	1679	7.2	2.4	2.5	275	15	33	4141	74.0	1490	96.4	96.8	97.0	0.72	0.82	0.85	599

ATEX MOTORS

Valid for lines:

TEFC - Exn-A - IE2

Output		Rated Speed (rpm)	Frame	Full Load Torque (ft.lb)	Locked Rotor Current Il/In	Locked Rotor Torque Tl/Tn	Break-down Torque Tb/Tn	Inertia J (lb-ft2)	Allowable locked rotor time (s)		Weight (lb)	Sound dB(A)	415 V							
														% of full load						
														Efficiency			Power Factor			
kW	HP								Hot	Cold			Rated speed (rpm)	50	75	100	50	75	100	Full load current In (A)
0.12	0.16	2805	63	0.300	4.8	3.0	2.9	0.0028	37	81	12.6	52.0	2805	51.4	59.0	60.6	0.50	0.63	0.72	0.383
		1390	63	0.610	3.9	1.8	2.0	0.0093	51	112	12.6	44.0	1390	53.2	57.1	59.0	0.51	0.64	0.74	0.382
		910	63	0.930	3.0	1.9	2.0	0.0145	52	114	15.9	43.0	910	39.1	47.5	50.7	0.41	0.50	0.59	0.558
		655	71	1.30	2.3	1.9	2.0	0.0197	172	378	20.9	41.0	655	37.1	45.7	48.8	0.34	0.41	0.49	0.698
0.18	0.25	2785	63	0.460	4.6	2.9	2.8	0.0033	28	62	13.7	52.0	2785	54.1	60.9	62.6	0.50	0.64	0.75	0.533
		1390	63	0.920	4.3	2.2	2.2	0.0131	40	88	15.9	44.0	1390	57.7	60.6	61.2	0.52	0.65	0.75	0.546
		900	71	1.43	3.2	2.0	2.0	0.0195	96	211	20.9	43.0	900	50.1	56.8	58.6	0.38	0.48	0.58	0.737
		675	80	1.89	3.1	1.9	2.1	0.0562	48	106	25.4	42.0	675	45.0	51.8	54.5	0.42	0.53	0.62	0.741
0.25	0.33	2775	63	0.640	4.7	3.2	2.9	0.0038	24	53	14.8	52.0	2775	55.9	62.7	64.5	0.49	0.63	0.74	0.729
		1410	71	1.26	4.5	2.0	2.2	0.0131	68	150	15.4	43.0	1410	57.8	64.5	66.5	0.46	0.59	0.69	0.760
		905	71	1.96	3.2	2.2	2.1	0.0221	70	154	25.4	43.0	905	50.1	57.8	59.7	0.35	0.45	0.54	1.08
		675	80	2.63	3.2	1.9	2.1	0.0681	42	92	29.8	42.0	675	47.0	53.8	56.8	0.42	0.53	0.63	0.972
0.37	0.5	2815	71	0.930	5.6	2.7	2.8	0.0078	21	46	14.3	56.0	2815	66.9	70.6	71.2	0.63	0.76	0.84	0.861
		1390	71	1.89	4.3	2.0	2.0	0.0157	48	106	17.6	43.0	1390	61.2	64.9	67.9	0.46	0.60	0.71	1.06
		915	80	2.87	3.9	1.8	2.0	0.0522	27	59	23.2	43.0	915	60.5	65.9	67.1	0.48	0.62	0.73	1.05
		695	90S	3.78	3.5	2.1	2.1	0.1042	37	81	39.7	43.0	695	53.1	59.9	60.9	0.39	0.49	0.59	1.43
0.55	0.75	2795	71	1.39	5.3	2.7	2.7	0.0095	15	33	18.7	56.0	2795	68.9	71.7	72.5	0.65	0.79	0.86	1.23
		1415	80	2.75	5.8	2.4	2.8	0.0524	18	40	23.2	44.0	1415	73.6	75.9	76.6	0.57	0.71	0.80	1.25
		915	80	4.26	4.1	2.0	2.2	0.0721	21	46	30.9	43.0	915	62.5	69.6	70.9	0.47	0.61	0.72	1.50
		690	90L	5.66	3.5	1.9	2.0	0.1431	31	68	48.5	43.0	690	58.5	62.8	63.9	0.41	0.53	0.63	1.90
0.75	1	2805	80	1.89	6.8	3.1	3.1	0.0154	20	44	27.6	59.0	2805	75.0	79.0	79.5	0.70	0.79	0.84	1.56
		1415	80	3.75	6.0	2.6	2.9	0.0686	15	33	29.8	44.0	1415	77.9	79.2	80.1	0.60	0.73	0.81	1.61
		930	90S	5.71	4.5	2.0	2.1	0.1303	23	51	41.9	45.0	930	73.2	75.6	76.4	0.48	0.61	0.71	1.92
		715	100L	7.44	4.6	2.0	2.4	0.2613	42	92	62.8	50.0	715	69.2	73.0	73.7	0.38	0.49	0.59	2.40
1.1	1.5	2805	80	2.78	6.3	3.2	3.1	0.0195	18	40	30.9	59.0	2805	78.6	80.2	80.7	0.62	0.75	0.82	2.31
		1444	90S	5.38	6.5	2.1	2.6	0.1172	14	31	41.9	49.0	1444	80.1	81.5	82.1	0.58	0.72	0.79	2.36
		930	90L	8.38	4.7	2.3	2.2	0.1561	17	37	50.7	45.0	930	74.3	77.3	78.1	0.46	0.59	0.70	2.80
		705	100L	11.0	4.6	2.1	2.3	0.3004	29	64	67.3	50.0	705	68.8	73.6	74.5	0.37	0.49	0.59	3.48
1.5	2	2840	90S	3.74	5.9	2.6	2.6	0.0384	12	26	38.6	62.0	2840	80.8	81.9	82.5	0.61	0.75	0.82	3.08
		1445	90L	7.34	6.3	2.0	2.8	0.1296	10	22	48.5	49.0	1445	80.1	82.3	83.1	0.53	0.68	0.78	3.22
		945	100L	11.3	5.0	2.0	2.4	0.2603	23	51	62.8	44.0	945	78.3	79.7	80.3	0.48	0.61	0.70	3.71
		705	112M	15.1	4.7	2.4	2.3	0.4786	29	64	86.0	46.0	705	75.3	78.2	78.9	0.41	0.53	0.63	4.20
2.2	3	2855	90L	5.46	6.6	3.0	3.0	0.0524	9	20	46.3	64.0	2855	82.2	83.4	83.9	0.59	0.72	0.80	4.56
		1430	100L	10.9	6.6	3.1	3.2	0.1951	16	35	67.3	53.0	1430	83.3	84.5	84.9	0.59	0.73	0.79	4.56
		945	112M	16.5	5.0	2.1	2.3	0.4352	19	42	83.8	48.0	945	80.0	82.1	82.4	0.49	0.63	0.71	5.23
		705	132S	22.2	5.5	2.2	2.4	1.40	25	55	137	48.0	705	80.1	81.4	81.4	0.49	0.62	0.70	5.37

Continued on next page

Data subject to change without notice.

Valid for lines:

TEFC - Exn-A - IE2

Output		Rated Speed (rpm)	Frame	Full Load Torque (ft.lb)	Locked Rotor Current Il/In	Locked Rotor Torque Tl/Tn	Break-down Torque Tb/Tn	Inertia J (lb-ft2)	Allowable locked rotor time (s)		Weight (lb)	Sound dB(A)	415 V							
													Rated speed (rpm)	% of full load						Full load current In (A)
														Efficiency			Power Factor			
kW	HP								Hot	Cold				50	75	100	50	75	100	
3	4	2890	100L	7.34	7.7	2.9	3.1	0.1205	12	26	62.8	67.0	2890	83.1	84.6	85.0	0.64	0.77	0.84	5.85
		1425	100L	14.9	6.5	3.2	3.3	0.2307	14	31	72.8	53.0	1425	84.3	85.5	86.0	0.59	0.73	0.80	6.07
		960	132S	22.0	5.7	2.0	2.4	0.8510	31	68	135	52.0	960	81.4	83.1	83.6	0.46	0.59	0.68	7.34
		705	132M	30.2	5.5	2.3	2.4	1.76	19	42	146	48.0	705	81.1	82.4	82.5	0.50	0.63	0.71	7.13
4	5.5	2880	112M	9.82	6.5	2.3	2.9	0.1559	16	35	83.8	64.0	2880	85.3	85.9	86.3	0.66	0.78	0.85	7.59
		1445	112M	19.6	6.6	2.0	2.6	0.3697	13	29	92.6	56.0	1445	85.3	86.6	87.0	0.60	0.73	0.80	8.00
		960	132M	29.4	6.0	2.1	2.5	1.07	21	46	150	52.0	960	83.0	84.4	84.9	0.47	0.61	0.69	9.50
		730	160M	38.9	4.7	2.0	2.2	2.00	29	64	236	51.0	730	83.2	84.7	85.2	0.49	0.62	0.70	9.33
5.5	7.5	2915	132S	13.3	6.8	2.2	3.0	0.3842	17	37	132	67.0	2915	85.6	87.6	88.0	0.63	0.76	0.83	10.5
		1460	132S	26.6	7.3	1.9	3.0	0.9879	10	22	139	56.0	1460	87.5	88.0	88.3	0.66	0.78	0.84	10.3
		965	132M	40.4	6.4	2.2	2.7	1.43	19	42	159	52.0	965	84.6	85.7	86.2	0.47	0.61	0.69	12.9
		725	160M	53.5	4.7	2.0	2.2	2.73	21	46	265	51.0	725	84.2	85.7	85.7	0.49	0.62	0.71	12.6
7.5	10	2915	132S	18.2	6.8	2.2	2.9	0.4696	13	29	139	67.0	2915	87.3	88.3	88.7	0.67	0.79	0.85	13.8
		1460	132M	36.3	7.2	2.0	3.0	1.25	8	18	159	56.0	1460	88.3	89.0	89.4	0.67	0.78	0.84	13.9
		970	160M	54.5	5.8	2.0	2.6	2.33	17	37	249	56.0	970	87.8	88.6	88.5	0.61	0.73	0.80	14.7
		725	160L	72.9	4.9	2.2	2.3	3.41	22	48	306	51.0	725	85.1	86.7	87.1	0.49	0.62	0.71	16.9
9.2	12.5	2920	132M	22.2	7.6	2.5	3.2	0.5550	10	22	154	67.0	2920	87.6	88.6	89.0	0.65	0.77	0.84	17.1
		1470	160M	44.3	6.0	2.0	2.6	1.43	13	29	212	61.0	1470	88.0	89.4	89.3	0.62	0.74	0.81	17.7
		970	160L	66.8	6.0	2.2	2.6	2.83	14	31	280	56.0	970	88.0	88.8	88.8	0.61	0.73	0.80	18.0
		725	180M	89.4	6.0	2.0	2.5	4.82	11	24	344	51.0	725	87.4	87.9	87.8	0.59	0.72	0.80	18.2
11	15	2940	160M	26.4	7.0	2.3	3.0	0.7999	13	29	229	67.0	2940	89.6	90.5	90.6	0.67	0.79	0.84	20.1
		1470	160M	52.7	6.4	2.3	2.8	1.73	10	22	232	61.0	1470	88.5	90.0	90.3	0.61	0.73	0.81	20.9
		970	160L	79.9	6.0	2.3	2.7	3.16	13	29	300	56.0	970	88.4	89.3	89.3	0.59	0.71	0.79	21.7
		725	180L	107	6.0	2.1	2.4	5.79	11	24	386	51.0	725	87.5	88.5	88.4	0.64	0.75	0.81	21.4
15	20	2935	160M	36.1	7.0	2.3	3.0	0.9281	9	20	247	67.0	2935	90.6	91.2	91.4	0.67	0.78	0.84	27.2
		1470	160L	72.2	6.2	2.3	2.8	2.07	10	22	276	61.0	1470	90.2	90.9	91.2	0.63	0.73	0.81	28.2
		970	180L	109	7.0	2.4	3.0	6.09	7	15	384	56.0	970	89.9	90.5	90.6	0.67	0.79	0.85	27.1
		730	200L	145	4.9	1.9	2.0	10.0	30	66	498	53.0	730	89.4	90.4	90.2	0.55	0.67	0.74	31.3
18.5	25	2945	160L	44.3	7.4	2.4	3.1	1.12	8	18	273	67.0	2945	91.0	91.9	92.2	0.66	0.77	0.84	33.2
		1470	180M	89.0	6.6	2.4	2.8	3.93	14	31	362	61.0	1470	91.1	91.7	91.7	0.50	0.75	0.81	34.7
		975	200L	134	5.7	2.1	2.5	8.34	15	33	472	60.0	975	90.5	91.2	91.3	0.63	0.74	0.80	35.2
		735	225S/M	177	6.3	2.0	2.4	19.8	17	37	747	56.0	735	91.1	91.9	91.9	0.62	0.74	0.80	35.0
22	30	2950	180M	52.7	7.3	2.2	3.0	2.31	9	20	362	67.0	2950	91.8	92.4	92.4	0.73	0.82	0.87	38.1
		1465	180L	106	6.8	2.6	2.9	4.76	15	33	410	61.0	1465	91.8	92.4	92.4	0.66	0.77	0.83	39.9
		975	200L	159	6.0	2.2	2.7	9.58	14	31	496	60.0	975	90.8	91.5	91.6	0.61	0.73	0.80	41.8
		735	225S/M	211	6.1	2.0	2.4	23.0	16	35	789	56.0	735	91.4	92.0	92.2	0.64	0.76	0.80	41.5

Continued on next page

ATEX MOTORS continued

Valid for lines:

TEFC - Exn-A - IE2

Output		Rated Speed (rpm)	Frame	Full Load Torque (ft.lb)	Locked Rotor Current Il/In	Locked Rotor Torque Tl/Tn	Break-down Torque Tb/Tn	Inertia J (lb-ft2)	Allowable locked rotor time (s)		Weight (lb)	Sound dB(A)	415 V							
													Rated speed (rpm)	% of full load						Full load current In (A)
														Efficiency			Power Factor			
kW	HP								Hot	Cold				50	75	100	50	75	100	
30	40	2960	200L	71.6	6.5	2.4	2.7	4.04	17	37	498	72.0	2960	92.3	93.0	93.0	0.71	0.81	0.86	52.2
		1470	200L	144	6.3	2.2	2.6	6.95	16	35	490	65.0	1470	92.3	92.9	92.9	0.65	0.76	0.81	55.5
		985	225S/M	215	6.8	2.1	2.5	23.0	12	26	792	63.0	985	92.2	92.6	92.7	0.68	0.79	0.84	53.6
		735	250S/M	288	6.6	2.1	2.7	25.2	13	29	955	56.0	735	91.6	92.3	92.5	0.64	0.76	0.81	55.7
37	50	2955	200L	88.4	6.8	2.4	2.6	5.32	16	35	562	72.0	2955	92.8	93.4	93.5	0.73	0.82	0.86	64.0
		1475	225S/M	177	6.6	2.2	2.7	14.5	12	26	754	66.0	1475	92.7	93.1	93.3	0.70	0.81	0.85	64.9
		985	250S/M	265	6.7	2.2	2.5	26.2	16	35	966	64.0	985	92.7	93.2	93.2	0.70	0.80	0.85	65.0
		740	280S/M	352	5.6	1.8	2.1	53.5	26	57	1354	59.0	740	92.6	93.4	93.6	0.61	0.72	0.78	70.5
45	60	2960	225S/M	107	7.0	2.2	2.8	7.71	12	26	785	75.0	2960	93.1	93.6	93.8	0.76	0.84	0.88	75.8
		1475	225S/M	215	6.8	2.4	2.7	17.0	10	22	800	66.0	1475	92.9	93.6	93.7	0.70	0.81	0.84	79.5
		985	280S/M	322	6.2	2.0	2.5	48.0	26	57	1314	65.0	985	93.1	93.5	93.5	0.65	0.76	0.80	83.7
		740	280S/M	429	5.8	1.9	2.1	64.3	23	51	1455	59.0	740	92.5	93.5	94.1	0.58	0.70	0.77	86.4
55	75	2960	250S/M	131	7.0	2.2	2.8	7.66	14	31	911	75.0	2960	93.3	93.8	94.0	0.75	0.84	0.88	92.5
		1475	250S/M	263	6.4	2.2	2.7	19.2	14	31	979	66.0	1475	93.3	93.9	94.1	0.72	0.82	0.86	94.6
		985	280S/M	394	6.2	2.0	2.4	56.0	22	48	1387	65.0	985	93.3	93.6	93.9	0.65	0.77	0.82	99.4
		740	315S/M	524	5.8	1.8	2.1	58.8	32	70	1876	62.0	740	93.3	94.1	94.3	0.62	0.73	0.78	104
75	100	2975	280S/M	178	7.0	2.0	2.8	20.3	28	62	1389	77.0	2975	93.2	94.2	94.3	0.76	0.84	0.88	126
		1485	280S/M	356	7.2	2.0	2.7	39.0	22	48	1409	69.0	1485	93.5	94.3	94.4	0.71	0.81	0.85	130
		990	315S/M	534	6.2	1.9	2.2	55.8	23	51	1846	67.0	990	93.7	94.2	94.2	0.66	0.77	0.81	137
		740	315S/M	714	5.9	1.8	2.1	77.5	30	66	2097	62.0	740	93.8	94.4	94.7	0.64	0.75	0.80	138
90	125	2975	280S/M	213	7.0	2.0	2.8	22.3	25	55	1440	77.0	2975	93.8	94.5	94.5	0.76	0.84	0.88	151
		1485	280S/M	427	7.2	2.1	2.7	44.6	20	44	1484	69.0	1485	93.8	94.6	94.7	0.73	0.82	0.86	154
		990	315S/M	641	6.0	1.9	2.1	66.2	22	48	1969	67.0	990	94.2	94.5	94.6	0.69	0.78	0.83	159
		740	315S/M	857	6.0	1.9	2.1	90.8	26	57	2249	62.0	740	94.1	94.6	94.8	0.64	0.75	0.80	165
110	150	2980	315S/M	260	7.3	2.0	2.9	23.0	24	53	1927	77.0	2980	94.1	94.8	94.9	0.76	0.84	0.88	183
		1490	315S/M	520	6.6	2.0	2.4	42.4	26	57	1956	71.0	1490	93.9	94.8	95.0	0.70	0.81	0.84	192
		990	315S/M	783	6.1	2.0	2.2	79.4	20	44	2130	67.0	990	94.2	94.8	94.9	0.69	0.78	0.83	194
		740	315L	1048	6.0	1.9	2.1	298	28	62	2743	68.0	740	94.3	94.7	94.9	0.64	0.74	0.79	204
		745	355M/L	1041	5.8	1.3	2.1	247	48	106	3041	70.0	745	93.0	95.2	95.2	0.59	0.77	0.77	209
132	175	2980	315S/M	312	7.3	2.0	2.9	26.9	21	46	2053	77.0	2980	94.4	95.1	95.2	0.78	0.86	0.89	217
		1490	315S/M	624	6.6	2.1	2.4	51.5	22	48	2101	71.0	1490	94.4	95.1	95.2	0.73	0.82	0.86	224
		990	315S/M	940	6.4	2.2	2.4	92.6	17	37	2284	67.0	990	94.3	94.9	95.0	0.68	0.78	0.83	233
		740	315L	1257	6.3	2.0	2.3	313	20	44	2981	68.0	740	94.5	95.0	95.1	0.61	0.72	0.78	248
		745	355M/L	1249	5.6	1.3	2.0	298	50	110	3248	70.0	745	93.5	95.4	95.4	0.60	0.71	0.77	250
		2980	315S/M	312	7.3	2.0	2.9	26.9	21	46	2053	77.0	2980	94.4	95.1	95.2	0.78	0.86	0.89	217
		1490	315S/M	624	6.6	2.1	2.4	51.5	22	48	2101	71.0	1490	94.4	95.1	95.2	0.73	0.82	0.86	224

Continued on next page

Data subject to change without notice.

Valid for lines:

TEFC - Exn-A - IE2

Output		Rated Speed (rpm)	Frame	Full Load Torque (ft.lb)	Locked Rotor Current Il/In	Locked Rotor Torque Tl/Tn	Break-down Torque Tb/Tn	Inertia J (lb-ft2)	Allowable locked rotor time (s)		Weight (lb)	Sound dB(A)	415 V							
													Rated speed (rpm)	% of full load						Full load current In (A)
														Efficiency			Power Factor			
kW	HP								Hot	Cold				50	75	100	50	75	100	
150	200	1490	315S/M	710	6.2	2.2	2.4	55.2	30	66	2168	71.0	1490	94.8	95.4	95.4	0.75	0.83	0.86	254
160	220	2980	315S/M	378	7.5	2.2	2.9	30.9	23	51	2194	77.0	2980	94.7	95.3	95.3	0.78	0.86	0.89	262
		1490	315S/M	757	6.6	2.2	2.4	58.9	20	44	2231	71.0	1490	94.6	95.3	95.4	0.74	0.82	0.86	271
		990	315L	1139	6.6	2.2	2.4	226	14	31	2708	68.0	990	94.5	95.1	95.2	0.67	0.78	0.83	282
		990	355M/L	1139	5.9	1.8	2.0	198	34	75	3204	73.0	990	93.9	95.8	96.0	0.60	0.74	0.80	290
		745	355M/L	1514	6.0	1.5	2.3	342	54	119	3563	70.0	745	94.8	95.4	95.6	0.59	0.71	0.78	299
185	250	2980	315S/M	438	7.6	2.2	3.1	33.8	16	35	2276	77.0	2980	94.8	95.5	95.4	0.78	0.85	0.88	307
		1490	315S/M	875	6.8	2.4	2.4	65.9	18	40	2456	71.0	1490	94.7	95.5	95.6	0.72	0.81	0.85	317
		990	315L	1317	6.9	2.3	2.4	243	12	26	2994	68.0	990	94.7	95.3	95.4	0.66	0.77	0.81	333
		990	355M/L	1317	5.7	1.9	2.0	219	32	70	3354	73.0	990	94.0	95.5	95.8	0.60	0.71	0.78	344
		745	355M/L	1750	6.1	1.5	2.3	392	48	106	3729	70.0	745	94.7	95.3	95.4	0.57	0.68	0.75	360
200	270	2985	355M/L	472	7.6	1.9	2.7	94.6	22	48	3279	80.0	2985	93.5	95.1	95.6	0.88	0.90	0.91	320
		1490	355M/L	946	6.3	1.8	2.0	141	18	40	3096	76.0	1490	94.9	95.5	95.6	0.71	0.79	0.84	346
		990	315L	1424	7.0	2.4	2.5	294	12	26	3281	68.0	990	94.8	95.3	95.4	0.66	0.77	0.82	356
		990	355M/L	1424	6.5	2.1	2.3	258	28	62	3623	73.0	990	94.4	95.4	95.7	0.62	0.73	0.79	368
		745	355M/L	1892	6.3	1.6	2.3	436	48	106	3892	70.0	745	94.9	95.4	95.5	0.59	0.71	0.78	374
220	300	2980	315L	520	7.8	2.4	2.8	123	14	31	2708	78.0	2980	94.9	95.5	95.6	0.79	0.86	0.89	360
		2990	355M/L	519	7.6	1.8	2.5	105	21	46	3440	80.0	2990	95.0	96.0	96.3	0.83	0.89	0.91	349
		1490	315L	1041	7.0	2.6	2.4	163	14	31	2939	74.0	1490	95.0	95.6	95.7	0.73	0.82	0.86	372
		1490	355M/L	1041	6.4	2.0	2.2	154	18	40	3177	76.0	1490	95.0	95.6	95.7	0.70	0.79	0.84	381
		990	315L	1566	6.8	2.3	2.3	328	14	31	3574	68.0	990	95.0	95.5	95.6	0.66	0.77	0.82	390
		995	355M/L	1566	6.0	2.0	2.1	280	32	70	3958	73.0	995	93.4	95.0	95.8	0.62	0.74	0.79	404
		745	355M/L	2081	6.3	1.5	2.3	462	48	106	4134	70.0	745	95.0	95.5	95.6	0.59	0.71	0.77	416
250	340	2980	315L	591	7.8	2.4	2.8	136	17	37	2902	78.0	2980	95.0	95.6	95.6	0.82	0.88	0.91	400
		2985	355M/L	590	7.9	2.2	2.8	115	20	44	3603	80.0	2985	95.4	96.3	96.4	0.86	0.91	0.92	392
		1490	315L	1183	7.0	2.6	2.4	193	13	29	3085	74.0	1490	95.1	95.8	95.9	0.74	0.83	0.87	417
		1490	355M/L	1183	6.8	2.1	2.4	171	18	40	3241	76.0	1490	94.2	95.7	95.8	0.70	0.80	0.84	432
		990	355M/L	1780	6.0	2.1	2.2	302	34	75	3945	73.0	990	95.1	95.4	95.5	0.62	0.73	0.79	461
		745	355A/B	2365	6.2	1.5	2.4	514	47	103	4613	70.0	745	94.7	95.5	95.7	0.58	0.70	0.77	472
260	350	1490	355M/L	1230	6.8	2.1	2.4	183	18	40	3241	76.0	1490	94.2	95.7	95.8	0.70	0.80	0.84	449
		990	355M/L	1851	6.0	2.1	2.2	302	34	75	3945	73.0	990	95.1	95.4	95.5	0.62	0.73	0.79	479
280	380	2980	315L	662	7.9	2.3	2.8	136	12	26	3180	78.0	2980	95.2	95.6	95.7	0.83	0.88	0.91	447
		2980	355M/L	662	7.7	1.9	2.6	120	17	37	3680	80.0	2980	95.2	95.6	95.7	0.83	0.88	0.91	447
		1490	315L	1324	7.2	2.6	2.4	214	12	26	3299	74.0	1490	95.2	95.7	95.8	0.73	0.82	0.86	473
		1490	355M/L	1324	6.6	2.1	2.4	191	14	31	3330	76.0	1490	95.3	95.7	95.8	0.71	0.80	0.84	484
		990	355M/L	1993	6.2	2.2	2.2	329	27	59	4154	73.0	990	95.2	95.5	95.6	0.61	0.72	0.78	522
		745	355A/B	2649	6.4	1.6	2.4	594	44	97	5025	70.0	745	94.7	95.5	95.7	0.57	0.70	0.77	529

Continued on next page

ATEX MOTORS continued

Valid for lines:

TEFC - Exn-A - IE2

Output		Rated Speed (rpm)	Frame	Full Load Torque (ft.lb)	Locked Rotor Current Il/In	Locked Rotor Torque Tl/Tn	Break-down Torque Tb/Tn	Inertia J (lb-ft2)	Allowable locked rotor time (s)		Weight (lb)	Sound dB(A)	415 V							
													Rated speed (rpm)	% of full load						Full load current In (A)
														Efficiency			Power Factor			
kW	HP								Hot	Cold				50	75	100	50	75	100	
300	400	2985	355M/L	708	8.0	2.5	2.6	133	23	51	3918	80.0	2985	95.2	95.6	95.7	0.86	0.90	0.92	474
		1490	355M/L	1419	7.2	2.2	2.4	204	18	40	3330	76.0	1490	95.3	95.7	95.8	0.71	0.80	0.84	519
		995	355M/L	2136	6.2	2.2	2.2	340	30	66	4190	73.0	995	95.2	95.6	95.6	0.60	0.70	0.77	567
315	430	2985	355M/L	744	7.8	2.1	2.6	133	23	51	3918	80.0	2985	95.2	95.6	95.7	0.86	0.90	0.92	498
		1490	355M/L	1490	7.2	2.4	2.4	212	14	31	3623	76.0	1490	95.3	95.7	95.8	0.71	0.80	0.85	538
		995	355M/L	2231	6.2	2.2	2.2	356	28	62	4364	73.0	995	95.2	95.6	95.6	0.62	0.73	0.79	580
330	450	1490	355M/L	1561	6.8	2.2	2.4	234	17	37	3901	76.0	1490	95.3	95.7	95.8	0.72	0.81	0.85	564
355	480	2985	355M/L	838	7.9	2.2	2.8	142	14	31	4053	80.0	2985	95.3	95.6	95.7	0.85	0.89	0.91	567
		1490	355M/L	1679	6.9	2.4	2.3	255	15	33	3863	76.0	1490	95.4	95.8	95.8	0.72	0.81	0.85	607
		990	355A/B	2527	6.2	2.0	2.3	406	29	64	4851	73.0	990	95.2	95.7	95.9	0.62	0.73	0.79	652
370	500	1490	355M/L	1750	7.0	2.4	2.4	276	15	33	4346	76.0	1490	95.0	95.7	95.9	0.72	0.81	0.85	631
400	550	2485	355A/B	944	7.6	2.4	2.8	160	31	68	4505	83.0	2485	95.7	96.2	96.5	0.84	0.88	0.91	634
		1490	355M/L	1892	7.3	2.6	2.4	276	11	24	4163	76.0	1490	95.3	95.8	95.8	0.71	0.80	0.85	683
450	610	2485	355A/B	1062	7.5	2.5	2.7	176	31	68	4763	83.0	2485	95.7	96.2	96.7	0.84	0.89	0.91	711
		1490	355A/B	2129	7.4	2.5	2.8	314	20	44	4606	76.0	1490	95.5	95.9	96.1	0.65	0.77	0.82	794

Data subject to change without notice.

Valid for lines:

TEFC - Exd - IE2

Output		Rated Speed (rpm)	Frame	Full Load Torque (ft.lb)	Locked Rotor Current Il/In	Locked Rotor Torque Tl/Tn	Break-down Torque Tb/Tn	Inertia J (lb-ft2)	Allowable locked rotor time (s)		Weight (lb)	Sound dB(A)	415 V							
														% of full load						
														Efficiency			Power Factor			
kW	HP								Hot	Cold			Rated speed (rpm)	50	75	100	50	75	100	Full load current In (A)
0.37	0.5	1450	90S	1.80	6.2	2.3	2.7	0.0000	41	90	55.1	49.0	1450	76.3	79.6	79.6	0.56	0.69	0.77	0.840
		695	90L	3.78	4.0	2.0	2.0	0.1063	21	46	66.1	43.0	695	52.0	60.0	64.0	0.37	0.47	0.56	1.44
0.55	0.75	1440	90S	2.70	5.9	2.2	2.5	0.1329	13	29	55.1	49.0	1440	76.5	79.5	80.0	0.59	0.71	0.79	1.21
		1440	90L	2.70	5.9	2.2	2.5	0.1329	13	29	55.1	49.0	1440	76.5	79.5	80.0	0.59	0.71	0.79	1.21
		700	90L	5.62	3.7	2.1	2.1	0.1329	18	40	76.3	43.0	700	49.5	58.2	63.5	0.38	0.47	0.56	2.15
0.75	1	1455	90S	3.65	6.9	2.4	2.9	0.1329	13	29	55.1	49.0	1455	75.0	78.5	80.0	0.54	0.67	0.76	1.72
		2900	90S	1.83	7.8	3.0	3.4	0.0430	20	44	67.3	62.0	2900	74.5	79.0	80.0	0.64	0.75	0.81	1.58
		930	90L	5.75	4.8	2.1	2.2	0.1329	20	44	74.3	45.0	930	71.0	76.0	76.5	0.46	0.60	0.70	1.92
		715	100L	7.44	4.2	1.9	2.2	0.2660	38	84	93.7	50.0	715	70.0	74.0	76.0	0.38	0.50	0.58	2.37
1.1	1.5	1450	90L	5.37	7.0	2.6	3.0	0.1329	14	31	74.3	49.0	1450	77.5	82.5	82.5	0.55	0.69	0.77	2.37
		2880	90S	2.70	7.6	2.9	2.9	0.0430	14	31	67.3	62.0	2880	77.5	81.0	81.5	0.63	0.75	0.82	2.25
		925	90L	8.47	4.5	2.3	2.3	0.1329	12	26	74.3	45.0	925	70.0	77.0	78.1	0.45	0.58	0.68	3.06
		710	100L	11.1	4.2	1.8	2.2	0.3059	31	68	98.6	50.0	710	69.5	73.5	76.9	0.37	0.49	0.59	3.37
1.5	2	2865	90S	3.70	7.3	2.6	2.9	0.0430	10	22	59.5	62.0	2865	80.8	83.4	84.2	0.60	0.73	0.81	3.06
		1445	100L	7.34	7.5	2.8	3.3	0.1998	12	26	99.7	53.0	1445	82.0	83.5	83.5	0.58	0.70	0.78	3.15
		950	100L	11.2	5.5	2.2	2.5	0.3059	19	42	101	44.0	950	77.0	80.5	80.5	0.45	0.57	0.68	3.77
		715	112M	15.1	4.6	2.4	2.4	0.5323	19	42	137	46.0	715	74.5	76.5	77.8	0.41	0.56	0.65	4.13
2.2	3	1440	100L	10.8	7.6	2.9	3.3	0.2178	12	26	103	53.0	1440	82.0	85.0	85.0	0.53	0.67	0.77	4.60
		2870	90L	5.43	7.8	3.5	3.4	0.0631	10	22	50.7	62.0	2870	82.0	84.0	84.2	0.57	0.71	0.80	4.49
		950	112M	16.4	5.2	2.2	2.6	0.4435	14	31	126	52.0	950	79.0	81.5	81.8	0.50	0.63	0.72	5.20
		715	132S	21.8	5.3	2.1	2.3	1.31	19	42	180	48.0	715	78.5	79.8	80.1	0.48	0.61	0.70	5.46
3	4	2905	100L	7.30	8.5	3.0	3.1	0.1462	9	20	92.6	67.0	2905	84.0	86.6	87.1	0.69	0.80	0.87	5.51
		1455	112M	14.6	7.0	2.2	2.7	0.3813	15	33	137	56.0	1455	85.0	86.0	86.0	0.57	0.71	0.78	6.12
		965	132S	22.0	6.0	2.1	2.5	1.01	28	62	180	53.0	965	79.5	83.0	85.0	0.50	0.64	0.72	6.70
		715	132M	29.8	5.9	2.5	2.6	1.79	16	35	209	48.0	715	78.5	82.0	83.0	0.50	0.62	0.70	7.18
4	5.5	2910	112M	9.72	8.2	2.7	3.4	0.1998	17	37	132	64.0	2910	85.5	87.5	87.5	0.68	0.81	0.86	7.31
		1450	112M	19.5	7.4	2.5	3.0	0.4449	10	22	108	56.0	1450	85.0	86.8	87.2	0.56	0.70	0.77	8.22
		730	160M	38.9	5.2	2.2	2.8	2.90	27	59	318	51.0	730	82.0	85.4	86.6	0.41	0.53	0.63	10.2
		965	132M	29.4	6.5	2.2	2.5	1.20	21	46	202	53.0	965	83.0	85.0	85.5	0.52	0.66	0.74	8.62
5.5	7.5	1465	132S	26.5	8.0	2.4	3.0	1.01	10	22	184	56.0	1465	86.5	88.8	89.2	0.59	0.72	0.81	10.6
		2940	132S	13.2	8.0	2.7	3.2	0.4879	19	42	188	67.0	2940	87.0	88.0	88.0	0.68	0.78	0.84	10.1
		965	132M	40.4	6.4	2.2	2.4	1.47	14	31	219	53.0	965	83.0	86.0	86.1	0.51	0.64	0.73	12.1
		730	160M	53.1	5.2	2.3	2.7	3.41	23	51	346	51.0	730	81.2	84.5	86.0	0.40	0.54	0.65	13.7
7.5	10	1465	132M	36.1	8.2	2.5	3.0	1.38	9	20	219	56.0	1465	88.0	89.2	89.5	0.65	0.78	0.84	13.8
		975	160M	54.5	6.6	2.5	2.9	3.41	19	42	333	56.0	975	86.0	88.5	88.8	0.58	0.71	0.79	14.7
		975	160L	54.5	6.6	2.5	2.9	3.41	19	42	234	56.0	975	86.0	88.5	88.8	0.58	0.71	0.79	14.7
		2930	132S	18.1	7.3	2.5	3.0	0.4879	10	22	179	67.0	2930	85.5	87.0	88.8	0.62	0.75	0.82	14.2
		730	160L	72.9	4.9	2.0	2.5	3.92	15	33	366	51.0	730	83.5	86.5	86.5	0.47	0.59	0.69	17.5

Continued on next page

ATEX MOTORS continued

Valid for lines:

TEFC - Exd - IE2

Output		Rated Speed (rpm)	Frame	Full Load Torque (ft.lb)	Locked Rotor Current Il/In	Locked Rotor Torque Tl/Tn	Break-down Torque Tb/Tn	Inertia J (lb-ft2)	Allowable locked rotor time (s)		Weight (lb)	Sound dB(A)	415 V							
														% of full load						
														Efficiency			Power Factor			
kW	HP								Hot	Cold			Rated speed (rpm)	50	75	100	50	75	100	Full load current In (A)
9.2	12.5	1465	160M	44.4	5.6	2.3	2.3	1.91	27	59	314	67.0	1465	88.2	90.0	90.0	0.67	0.78	0.83	16.9
		2960	160M	21.9	8.5	2.5	3.2	1.12	15	33	319	70.0	2960	86.0	89.5	90.0	0.69	0.80	0.84	16.7
		975	160L	66.8	6.2	2.2	2.7	3.92	15	33	366	56.0	975	88.0	89.0	89.0	0.55	0.71	0.79	18.0
		730	180M	89.4	7.0	2.2	2.7	6.22	12	26	456	51.0	730	87.2	88.3	88.6	0.63	0.75	0.81	17.8
11	15	2955	160M	26.3	8.5	2.8	3.3	1.26	14	31	334	70.0	2955	88.5	90.8	90.8	0.66	0.77	0.83	20.0
		1470	160M	52.9	6.0	2.5	2.6	2.38	19	42	342	67.0	1470	89.7	90.5	90.6	0.64	0.75	0.81	20.7
		975	160L	79.9	7.0	2.4	2.7	4.18	13	29	375	56.0	975	88.0	89.6	89.6	0.54	0.68	0.76	22.3
		730	180L	107	7.0	2.2	2.4	6.22	9	20	478	51.0	730	87.8	89.0	89.0	0.65	0.75	0.81	21.2
15	20	1470	160L	72.2	6.1	2.5	2.6	2.74	17	37	364	67.0	1470	89.5	91.2	91.2	0.62	0.74	0.81	28.1
		3950	160M	35.9	7.8	2.5	3.2	1.26	10	22	334	70.0	3950	89.0	90.8	91.0	0.71	0.80	0.86	26.4
		735	200L	145	5.0	2.0	2.2	11.9	28	62	717	53.0	735	89.0	90.6	91.3	0.50	0.63	0.69	33.1
		975	180L	109	8.0	2.7	3.0	6.87	9	20	512	56.0	975	89.4	89.8	89.8	0.70	0.80	0.85	26.8
18.5	25	1475	180M	88.7	8.0	2.9	2.9	4.68	12	26	490	64.0	1475	90.7	92.2	92.4	0.60	0.73	0.80	34.5
		980	200L	134	6.3	2.3	2.5	8.94	17	37	617	58.0	980	90.3	91.5	91.5	0.64	0.75	0.80	34.6
		730	225S/M	179	7.2	2.1	2.6	20.1	18	40	867	60.0	730	90.2	91.5	91.9	0.65	0.77	0.82	34.2
		2950	160L	44.3	8.2	2.6	3.3	1.54	10	22	373	70.0	2950	90.0	91.3	91.3	0.72	0.82	0.85	32.8
22	30	1475	180L	105	7.5	2.7	2.9	4.68	14	31	478	64.0	1475	90.7	92.3	92.5	0.61	0.74	0.80	41.1
		735	225S/M	212	7.5	2.2	3.0	23.5	18	40	805	60.0	735	90.5	92.1	92.5	0.63	0.74	0.81	40.8
		2955	180M	52.6	8.5	2.8	3.1	2.69	13	29	480	70.0	2955	90.5	92.0	92.0	0.73	0.83	0.86	38.3
		980	200L	159	6.2	2.3	2.6	10.6	15	33	529	58.0	980	90.0	91.7	92.0	0.60	0.72	0.80	41.2
30	40	1480	200L	143	7.0	2.5	2.6	7.85	18	40	639	69.0	1480	92.0	93.2	93.2	0.63	0.75	0.81	54.9
		2965	200L	71.4	7.4	2.7	2.8	4.90	31	68	647	74.0	2965	92.0	93.0	93.0	0.74	0.82	0.86	51.6
		985	225S/M	215	7.0	2.6	2.6	23.5	21	46	937	61.0	985	90.8	92.4	92.6	0.70	0.79	0.84	53.1
		730	250S/M	290	7.5	2.1	2.8	29.0	17	37	1069	60.0	730	91.3	92.5	93.0	0.65	0.77	0.82	54.7
37	50	2965	200L	88.1	7.6	2.7	2.7	5.32	16	35	573	74.0	2965	93.0	94.0	94.6	0.72	0.82	0.86	63.3
		1485	225S/M	176	7.2	2.2	2.7	16.6	16	35	906	70.0	1485	92.2	93.4	93.6	0.73	0.82	0.86	63.7
		740	280S/M	352	6.5	1.9	2.2	62.7	32	70	1687	62.0	740	92.1	93.4	93.8	0.60	0.72	0.79	69.5
		990	250S/M	265	7.0	2.5	2.6	31.3	20	44	1103	61.0	990	91.0	93.1	93.1	0.69	0.79	0.82	67.4
45	60	1480	225S/M	214	7.4	2.4	3.0	19.9	15	33	970	70.0	1480	93.4	93.8	93.8	0.73	0.81	0.87	76.1
		2970	225S/M	107	8.5	2.4	2.9	10.6	18	40	1017	82.0	2970	92.5	93.7	93.7	0.80	0.87	0.89	75.1
		740	280S/M	429	6.5	2.0	2.4	73.6	32	70	1819	62.0	740	92.5	93.5	94.1	0.58	0.70	0.77	86.4
		985	280S/M	322	6.8	2.2	2.7	54.5	27	59	1625	66.0	985	91.0	93.1	93.5	0.64	0.75	0.80	83.2
55	75	740	280S/M	524	6.5	2.0	2.2	81.8	32	70	1885	62.0	740	93.1	94.5	94.6	0.61	0.73	0.79	102
		740	315S/M	524	6.5	2.0	2.2	81.8	32	70	1918	62.0	740	93.1	94.5	94.6	0.61	0.73	0.79	102
		2970	250S/M	131	8.9	2.6	3.4	11.9	15	33	1131	82.0	2970	92.8	94.0	94.0	0.80	0.86	0.88	91.5
		1480	250S/M	263	7.2	2.5	2.8	27.4	17	37	1226	70.0	1480	93.4	94.0	94.0	0.75	0.85	0.88	91.8
		985	280S/M	394	6.7	2.1	2.6	62.7	21	46	1704	66.0	985	91.8	93.3	93.7	0.64	0.75	0.81	100

Continued on next page

Data subject to change without notice.

Valid for lines:

TEFC - Exd - IE2

Output		Rated Speed (rpm)	Frame	Full Load Torque (ft.lb)	Locked Rotor Current Il/In	Locked Rotor Torque Tl/Tn	Break-down Torque Tb/Tn	Inertia J (lb-ft2)	Allowable locked rotor time (s)		Weight (lb)	Sound dB(A)	415 V							
													Rated speed (rpm)	% of full load						Full load current In (A)
														Efficiency			Power Factor			
kW	HP								Hot	Cold				50	75	100	50	75	100	
75	100	1485	280S/M	356	7.2	2.2	2.6	51.4	38	84	1852	70.0	1485	93.2	94.6	94.8	0.77	0.84	0.87	126
		740	315S/M	714	6.6	1.9	2.2	104	20	44	2342	62.0	740	93.7	94.7	94.9	0.63	0.76	0.80	137
		2975	280S/M	178	7.7	2.2	2.9	30.2	51	112	1854	83.0	2975	92.5	94.0	94.5	0.81	0.86	0.88	124
		985	315S/M	537	6.7	2.1	2.4	81.8	20	44	1599	69.0	985	93.0	94.0	94.1	0.69	0.79	0.83	133
		985	280S/M	537	6.7	2.1	2.4	81.8	20	44	1599	66.0	985	93.0	94.0	94.1	0.69	0.79	0.83	133
		2965	250S/M	178	8.5	3.0	3.4	13.2	10	22	1257	82.0	2965	92.3	93.8	94.1	0.81	0.87	0.90	123
90	125	2980	280S/M	213	8.2	2.2	2.8	33.5	42	92	1934	83.0	2980	93.5	94.8	94.8	0.77	0.85	0.88	149
		1485	280S/M	427	7.8	2.4	2.6	66.7	25	55	2060	70.0	1485	93.7	94.6	94.8	0.77	0.84	0.87	151
		740	315S/M	857	6.8	1.9	2.4	125	23	51	2690	62.0	740	93.6	94.6	95.1	0.63	0.75	0.80	165
		985	315S/M	644	6.5	2.2	2.4	95.4	16	35	2271	69.0	985	93.3	94.2	94.4	0.68	0.78	0.82	161
110	150	745	355M/L	1048	6.4	1.5	2.2	298	41	90	3153	70.0	745	93.0	95.2	95.2	0.59	0.77	0.77	209
		2975	315S/M	261	8.0	2.3	2.8	35.7	20	44	2205	83.0	2975	93.8	94.8	95.0	0.80	0.86	0.88	182
		2975	280S/M	261	8.0	2.3	2.8	35.7	20	44	1962	83.0	2975	93.8	94.8	95.0	0.80	0.86	0.88	182
		1485	280S/M	522	7.6	2.4	2.6	76.2	29	64	2348	70.0	1485	94.0	94.8	95.2	0.78	0.85	0.87	184
		1485	315S/M	522	7.6	2.4	2.6	76.2	29	64	2426	72.0	1485	94.0	94.8	95.2	0.78	0.85	0.87	184
		985	315S/M	787	6.5	2.2	2.4	125	18	40	2569	69.0	985	93.8	94.6	94.6	0.66	0.77	0.83	194
132	175	745	355M/L	1257	6.5	1.6	2.2	313	47	103	3969	70.0	745	93.5	95.4	95.4	0.60	0.71	0.77	250
		2975	315S/M	313	7.8	2.2	2.7	41.3	32	70	2337	83.0	2975	93.7	95.0	95.3	0.80	0.87	0.89	215
		1485	315S/M	626	7.8	2.4	2.6	89.6	25	55	2624	72.0	1485	94.2	95.0	95.3	0.76	0.84	0.87	221
		990	355M/L	940	6.1	1.9	2.2	215	90	198	3749	73.0	990	93.6	95.0	95.2	0.64	0.75	0.80	240
150	200	1485	315S/M	712	7.5	2.4	2.7	89.6	20	44	2216	72.0	1485	90.0	95.3	95.4	0.76	0.82	0.86	253
160	220	745	355M/L	1524	6.6	1.6	2.2	387	42	92	4212	70.0	745	93.8	95.7	95.7	0.58	0.71	0.78	298
		2975	315S/M	380	7.8	2.2	2.5	50.3	33	73	2567	83.0	2975	94.5	95.4	95.4	0.83	0.88	0.89	260
		1485	315S/M	759	7.6	2.4	2.6	89.6	20	44	2668	72.0	1485	94.0	95.3	95.4	0.74	0.82	0.86	270
		990	355M/L	1139	6.0	1.9	2.1	226	76	167	3969	73.0	990	93.6	95.2	95.4	0.60	0.74	0.80	290
200	270	1490	355M/L	946	6.6	2.1	2.3	163	49	108	4006	79.0	1490	95.0	95.8	96.0	0.78	0.85	0.87	333
		990	355M/L	1424	6.1	2.2	2.3	294	85	187	4212	73.0	990	94.0	95.2	95.4	0.62	0.73	0.79	368
		745	355M/L	1905	6.8	1.6	2.1	462	37	81	4818	70.0	745	94.0	95.0	95.5	0.54	0.68	0.76	383
		2985	355M/L	472	7.2	1.8	2.6	115	70	154	4035	81.0	2985	93.0	94.6	95.1	0.88	0.90	0.91	320
220	300	1490	355M/L	1041	7.0	2.1	2.4	163	38	84	3572	79.0	1490	94.6	95.8	95.8	0.77	0.84	0.87	365
250	340	1490	355M/L	1183	6.9	2.2	2.5	193	36	79	4236	79.0	1490	94.7	95.7	95.8	0.77	0.85	0.87	415
		2985	355M/L	590	7.8	1.7	2.5	136	65	143	4348	81.0	2985	95.0	95.7	95.7	0.86	0.91	0.92	392
		990	355M/L	1780	6.1	1.9	2.1	351	64	141	4818	73.0	990	94.2	95.5	95.6	0.66	0.76	0.80	452
280	380	990	355M/L*	1993	6.0	2.1	2.2	351	54	119	4818	73.0	990	94.0	95.2	95.6	0.64	0.74	0.79	514
315	430	1490	355M/L	1490	6.5	2.2	2.4	265	42	92	4844	79.0	1490	95.0	95.9	95.9	0.73	0.84	0.88	516

delete this blank page.
start with TOC, section C

Table of Contents

SECTION C

Mechanical Data

TEFC – W22 NEMA Premium Efficiency C-2

C & D Flanges Dimensions – Valid for Cast Iron TEFC and ODP C-6

C-Flange additional detail C-6

D-Flange additional detail C-6

TEFC – Rolled Steel NEMA Premium Efficiency C-7

ODP – Rolled Steel NEMA Premium Efficiency C-11

ODP – Cast Iron NEMA Premium Efficiency C-15

TEFC – Explosion Proof – NEMA Premium Efficiency C-18

IEC – General Purpose – W22 – Cast Iron Frame C-20

IEC TRU-METRIC™ – Three Phase – Cast Iron Frame – Type C Flange C-23

IEC TRU-METRIC™ – Three Phase – Cast Iron Frame – Type F Flange C-24

IEC – General Purpose – W21 – Aluminum Frame C-25

IEC TRU-METRIC™ – Three Phase – Aluminum Frame – Type C Flange C-26

IEC TRU-METRIC™ – Three Phase – Aluminum Frame – Type F Flange C-26

TEFC – W22 JM C-27

TEFC – W22 JP C-30

ODP – Rolled Steel JM C-32

ODP – Rolled Steel JP C-34

TEFC – Brake Motors C-36

TEFC – Rolled Steel Fractional C-37

TEFC – Rolled Steel Standard Efficiency Jet Pump – Type C C-39

TEFC – Rolled Steel Standard Efficiency Jet Pump – Type J C-40

ODP – Rolled Steel Standard Efficiency Jet Pump – Type C C-41

ODP – Rolled Steel Standard Efficiency Jet Pump – Type J C-42

TEFC – Pbase – High Efficiency C-43

TEFC – Cooling Tower Motors – NEMA Premium C-44

Data subject to change without notice.

TEAO – Cooling Tower Motors – NEMA Premium C-48
General Purpose – NEMA 56 – Single Phase C-51
TEFC – Single Phase (Cast Iron) C-52
TEFC – Farm Duty – Single Phase (plate) C-53
TEFC – Farm Duty Motors – Auger Drive C-54
ODP – General purpose – NEMA 56 – Single phase C-55
ODP – Compressor Duty – Single phase C-56
ODP – Split Phase Resilient Base – Single phase C-57
TENV – Vector Duty C-58
ODP – Pool & Spa Motors – C-Flange C-59
ODP – Pool & Spa Motors – Square Flange C-59
Air Handling Motors – Commercial HVAC Motors C-60
TEFC - Saw Arbor Motors C-61
Wash Down Duty – Shark™ – Stainless Steel C-62
W22 – Crusher Duty C-63

TEFC – W22 NEMA Premium Efficiency

Frame	2E	2F	A	AA	AB	B	BA	C	D	G	HB	HD	HF	HG	HH	HK
143T		4.000				5.157		12.346							4.250	
143/5T	5.500	4.000/5.000	6.457	NPT 3/4"	6.260	6.142	2.250	13.346	3.500	0.354	1.787	*	3.500		4.750	2.638
145T		5.000														
182T		4.500				5.945		14.860							5.000	
182/4T	7.500	4.500/5.500	8.661		7.565		2.750		4.500	0.394	2.236	11.115	4.500			
184T						6.969		15.860							5.500	
L184T		5.500		NPT 1"												3.150
213T						7.362		18.021							6.250	
213/5T	8.500	5.500/7.000	9.764		8.583	8.858	3.500	19.517	5.250	0.669	2.985	12.613	5.250		7.000	
215T		7.000														
254T		8.252				10.000		23.213							8.376	
254/6T	10.000	8.252/10.000	12.126		10.483	11.732	4.250	24.945	6.250	0.827	3.061	14.685	6.565		9.250	
256T		10.000														
284TS		9.500				11.575		25.061							9.500	
284T				NPT 1 1/2"				26.433								3.976
284/6TS		9.500/11.000						26.557						*		
284/6T	11.000		13.780		11.073		4.750	27.929	7.000	1.023	3.535	16.154	7.000		10.250	
286TS		11.000				13.071		26.557								
286T								27.929								
324TS		10.500						28.120							10.500	
324T								29.620								
324/6TS		10.500/12.000						29.616								
324/6T	12.500		15.157	NPT 2"	12.575	14.567	5.250	31.116	8.000	1.300	4.811	18.394	8.708		11.250	4.705
326TS		12.000						29.616								
326T						14.567		31.116							11.250	
364/5TS	14.016	11.260/12.244	17.165			15.760	5.875	32.276	9.000	1.480	4.251	24.212			12.362	
364/5T				NPT 3"	16.016	15.512		34.251							8.346	6.024
404/5TS	15.984	12.244/13.740	19.921			18.386	6.625	36.732	10.000	1.811	5.252	23.110	*		14.213	
404/5T								39.730								
444/5TS		14.500/16.500			18.570	20.315		41.200		1.630	5.687	27.362			15.748	5.970
444/5T								44.950								
445/7TS		16.500/20.000				23.897		44.951		1.654						
445/7T	18.000		21.929		20.559		7.500	48.696	11.000		12.488	30.173	20.724	26.830	11.803	6.929
447/9TS		20.000/25.000				31.535		52.588		1.630						
447/9T				2xNPT 3"				56.338								
L447/9TS								53.431			11.535	28.704	20.551	28.185	11.500	8.661
L447/9T					23.720			57.181								
504/5TS	20.000	16.000/18.000	24.724		20.599	24.449	8.500	48.215	12.500	1.870	15.275	30.307	24.291	29.502	10.394	6.929
504/5T								54.095								
586/7TS		22.000/25.000			23.189	29.921		55.027			18.575	34.537	26.732			8.661
586/7T	23.000		29.528				10.000	61.902	14.500	2.492				35.236	13.386	
588/9TS		28.000/32.000		2xNPT 4"	27.440	37.980		62.506			16.338	35.346	26.182			11.417
588/9T								69.381								

* Not applicable.

TEFC – W22 NEMA Premium Efficiency continued

Outline drawings on next page

Frame	Hole H	J	K	LL	LM	O	P	Shaft end						Bearings [1]	
								d1	ES	N-W	R	S	U	D.E.	N.D.E.
143T	0.344	1.437	*	4.528	4.094	7.122	7.047	A4	1.575	2.250	0.765	0.187	0.875	6205 ZZ	6204 ZZ
143/5T															
145T															
182T	0.406	1.614		5.512	5.236	9.343	8.740		1.969	2.750	0.984	0.250	1.125	6207 ZZ	6206 ZZ
182/4T															
184T															
L184T															
213T		1.772	2.165			10.841	10.669		2.480	3.375	1.203	0.313	1.375	6308 ZZ	6207 ZZ
213/5T															
215T															
254T	0.531	2.539	2.559	7.815	7.480	12.598	12.953		2.756	4.000	1.406	0.375	1.625	6309 C3	6209 C3
254/6T															
256T															
284TS		3.110	2.874			14.067	14.173		2.480	3.250				6311 C3	6211 C3
284T									3.149	4.622	1.594	0.500	1.875		
284/6TS									2.480	3.250	1.406	0.375	1.625		
284/6T									3.149	4.622	1.594	0.500	1.875		
286TS									2.480	3.250	1.406	0.375	1.625		
286T									3.149	4.622	1.594	0.500	1.875		
324TS	0.657	3.189	3.189	9.055	8.661	15.953	15.827		2.756	3.750			1.875	6312 C3	6212 C3
324T									3.937	5.250	1.844		2.125		
324/6TS									2.756	3.750	1.594		1.875		
324/6T									3.937	5.250	1.844		2.125		
326TS									2.756	3.750	1.594		1.875		
326T									3.937	5.250	1.844		2.125		
364/5TS	0.660	3.150	4.134	10.591	11.267	17.957	17.914	DUNC 3/4"-10	1.968	3.748	1.591		1.875	6314 C3	6314 C3
364/5T									4.330	5.874	2.019	0.625	2.375		
404/5TS	0.810	3.937	5.669			19.566	19.134		2.756	4.250	1.842	0.500	2.125		
404/5T									5.512	7.250	2.449	0.750	2.875	6316 C3	
444/5TS			5.866	12.362	12.283	22.795	23.583		3.000	4.750	2.021	0.625	2.375	6314 C3	
444/5T									7.087	8.500	2.880	0.875	3.375	6319 C3	6316 C3
445/7TS			7.244	14.921	15.039				3.000	4.750	2.021	0.625	2.375	6314 C3	6314 C3
445/7T									7.087	8.500	2.880	0.875	3.375	6319 C3	6316 C3
447/9TS			11.770						3.000	4.750	2.021	0.625	2.375	6314 C3	6314 C3
447/9T									7.087	8.500	2.880	0.875	3.375	6322 C3	6319 C3
L447/9TS			8.780	15.906	17.165	23.874	25.866		3.000	4.750	2.021	0.625	2.375	6314 C3	6314 C3
L447/9T									7.087	8.500	2.880	0.875	3.375	6322 C3	6319 C3
504/5TS	1.250	4.724	7.228	14.921	15.039	25.425			3.000	4.750	2.021	0.625	2.375	6314 C3	6314 C3
504/5T									8.661	10.630	3.134	0.875	3.625	6319 C3	6316 C3
586/7TS	1.181	5.512	9.055	15.906	17.165	28.985	28.977		3.000	4.750	2.021	0.625	2.375	6314 C3	6314 C3
586/7T								DUNC 7/8"-9	8.661	11.625	3.312	1.000	3.875	6322 C3	6319 C3
588/9TS			13.030	18.110	21.417			DUNC 3/4"-10	3.000	4.750	2.021	0.625	2.375	6314 C3	6314 C3
588/9T								DUNC 7/8"-9	8.661	11.625	3.312	1.000	3.875	6322 C3	6319 C3

* Not applicable. [1] All IEEE841 motors have open regreasable bearings.

TEFC – W22 NEMA Premium Efficiency continued

Frames 143T to 215T

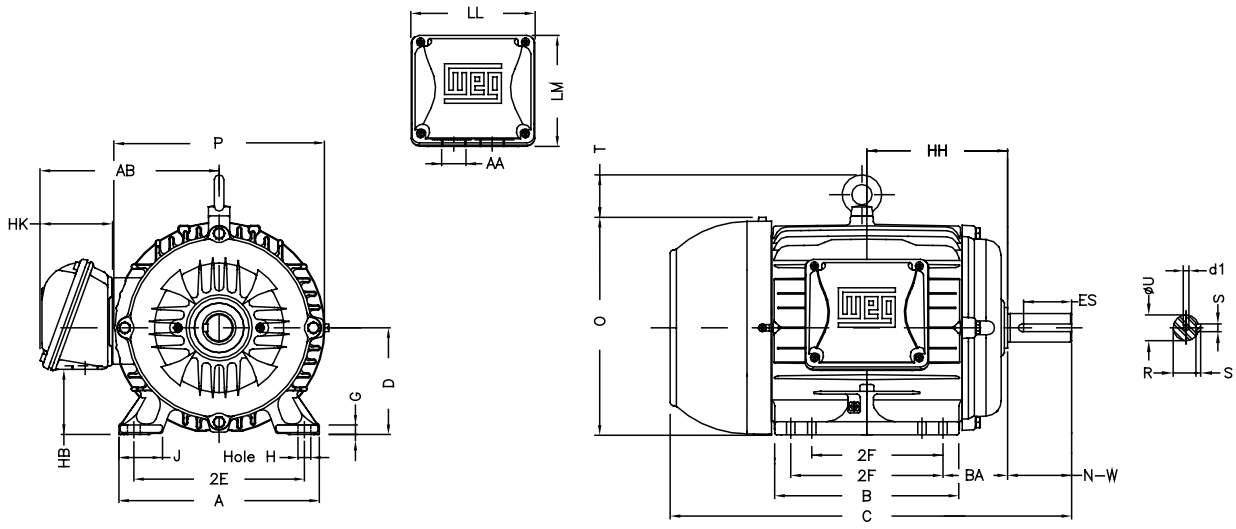

Frames 254T to 326T

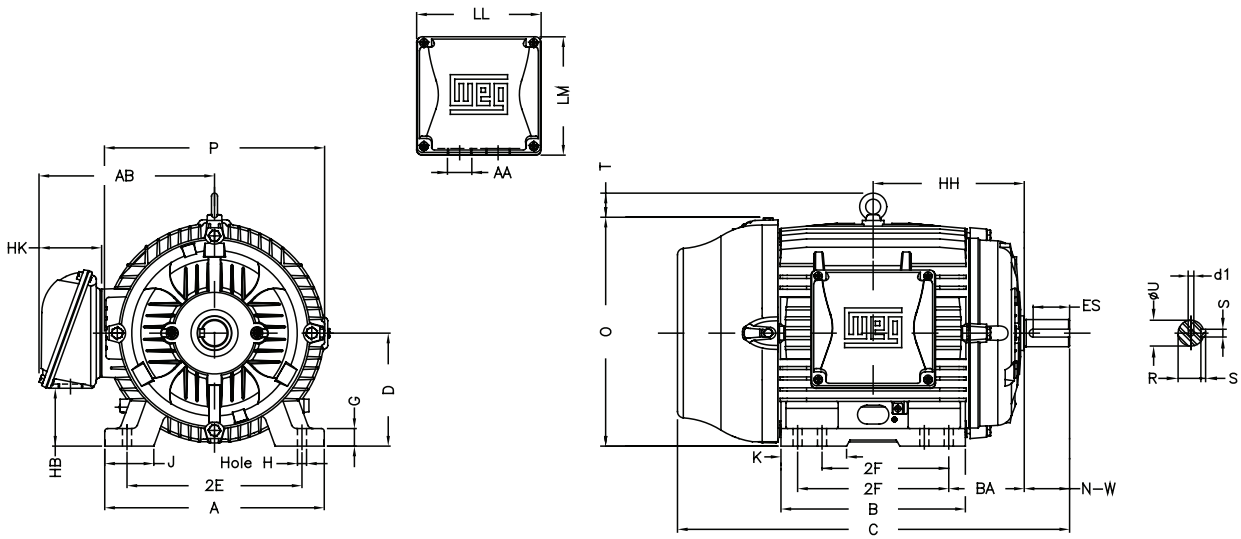

Data subject to change without notice.

Frames 364/5TS to 444/5T

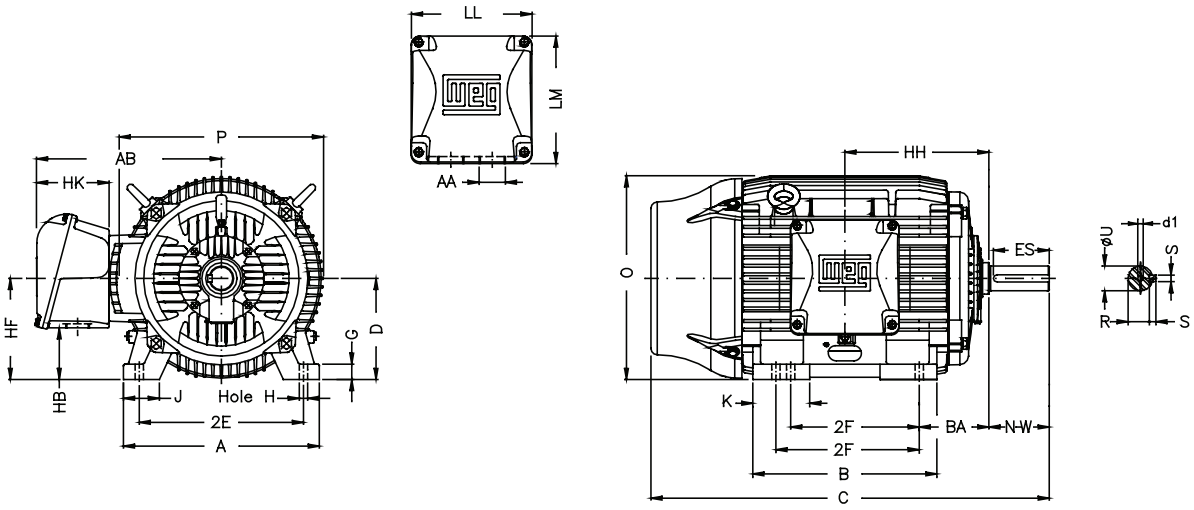

Frames 445/7TS to 588/9T

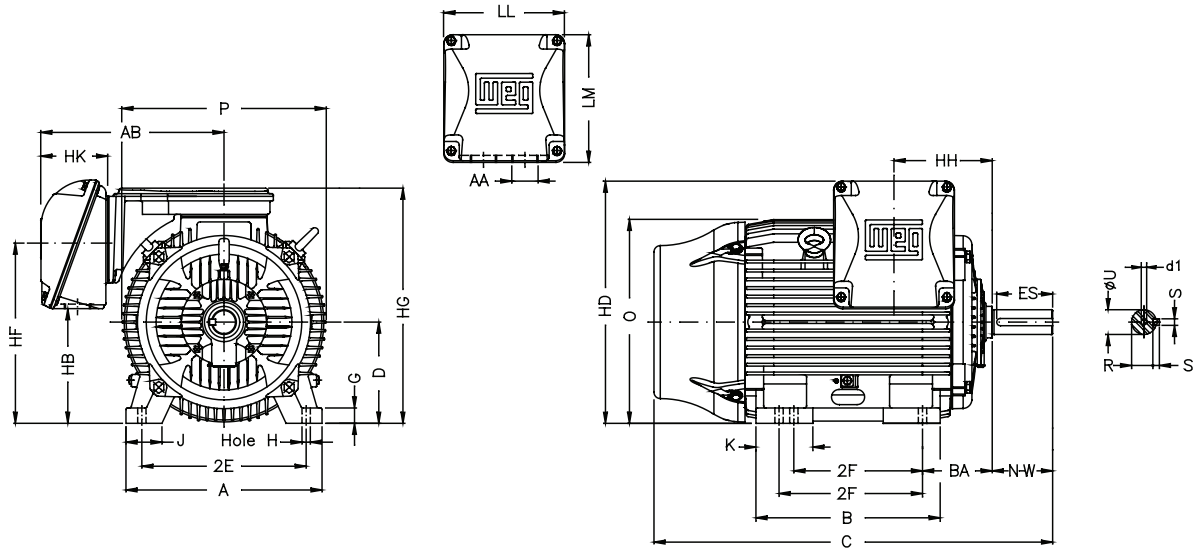

C & D Flanges Dimensions – Valid for Cast Iron TEFC and ODP
C-Flange additional detail

All dimensions in inches

Frame	Type	Size	BA	AJ	AK	AH	BB	BC	BD	BF TAP	BF Number
143/5T	C	FC-149	2.250	5.875	4.500	2.125	0.156	0.125	6.500	UNC 3/8"x16	4
182/4T	C	FC-184	2.750	7.250	8.500	2.625	0.250	0.250	8.875	UNC 1/2"x13	
213/5T	C		3.500			3.125					
254/6T	C		4.250			3.750					
28 4/6T	C	FC-228	4.750	9.000	10.500	4.375			11.030		
284/6TS	C					3.000					
324/6T	C	FC-279	5.250	11.000	12.500	5.000			13.580	UNC 5/8"x11	8
324/6TS	C					3.500					
364/5T	C		5.875			5.625			15.550		
364/5TS	C					3.500					
404/5T	C		6.625			7.000					
404/5TS	C					4.000					
444/5T	C	FC-355	7.500	14.000	16.000	8.250			17.910		
444/5TS	C					4.500					
445/7T	C					8.250					
445/7TS	C					4.500					
447/9T	C					8.250					
447/9TS	C					4.500					
L447/9T	C					8.250					
L447/9TS	C					4.500					
504/5	C	FC-368	8.500	14.500	16.500	10.375					
504/5S	C					4.500					
586/7	C		10.000			11.375					
586/7S	C					4.500					
588/9	C					11.375					
588/9S	C					4.500					

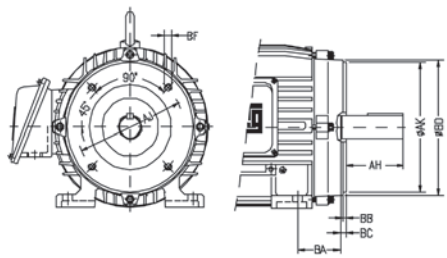

D-Flange additional detail

Frame	Type	Size	BA	AJ	AK	BB	BD	BF TAP SIZE	BF Number
143/5T	D	FD-254	2.250	10	9	0.203	11	0.562	4
182/4T	D	FD-254	2.750	10	9		11	0.562	
213/5T	D	FD-254	3.500	10	9		11	0.562	
254/6T	D	FD-317	4.250	12.5	11		14	0.828	
284/6T	D	FD-317	4.750	12.5	11		14	0.828	
284/6TS	D	FD-317		12.5	11		14	0.828	
324/6T	D	FD-406	5.250	16	14		18	0.828	
324/6TS	D	FD-406		16	14		18	0.828	
364/5T	D	FD-406	5.875	16	14		17.71	0.828	
364/5TS	D	FD-406		16	14		17.71	0.828	
404/5T	D	FD-508	6.625	20	18		22	0.828	8
404/5TS	D	FD-508		20	18		22	0.828	
444/5T	D	FD-508	7.500	20	18		21.65	0.828	
444/5TS	D	FD-508		20	18		21.65	0.828	
445/7T	D	FD-508		20	18		21.65	0.828	
445/7TS	D	FD-508		20	18		21.65	0.828	
447/9T	D	FD-508		20	18		21.65	0.828	
447/9TS	D	FD-508		20	18		21.65	0.828	
L447/9T	D	FD-508		20	18		21.65	0.828	
L447/9TS	D	FD-508		20	18		21.65	0.828	
504/5T	D	FD-558	8.500	22	18	0.250	24.8	0.828	
504/5TS	D	FD-558		22	18		24.8	0.828	
586/7T	D	FD-762	10.000	30	28		32	0.828	
586/7TS	D	FD-762		30	28		32	0.828	
588/9T	D	FD-762		30	28		32	0.828	
588/9TS	D	FD-762		30	28		32	0.828	

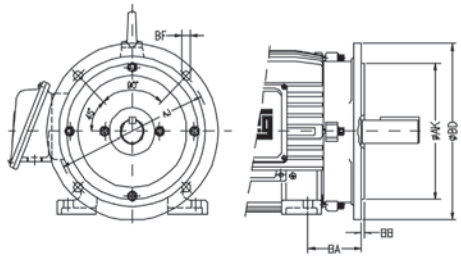

Data subject to change without notice.

Frame	2E	2F	A	AA	AB	B	BA	D	G	HB	HK	Hole H
143/5T	5.500	4.000/5.000	6.535	1.118	5.873	6.496	2.250	3.500	0.118	1.784	2.629	0.343
182/4T	7.500	4.500/5.500	8.661	1.118	6.696	6.299	2.750	4.500	0.167	2.784		0.406
213/5T	8.500	5.500/7.000	9.449	1.377	7.973	7.953	3.500	5.250	0.167	2.982	3.022	
254/6T	10.000	8.252/10.000	11.417	1.732	9.448	11.417	4.250	6.250	0.187	3.631	3.645	0.530

Frame	J	LL	LM	O	P	T	Shaft end						Bearings	
							d1	ES	N-W	R	S	U	D.E.	N.D.E.
143/5T	1.722	4.563	4.090	6.723	7.638	0.604	A 3.15	1.417	2.250	0.766	0.187	0.8750	6205 ZZ	6203 ZZ
182/4T	1.299			8.557	9.435	0.661	A 4	1.969	2.750	0.984	0.250	1.125	6206 ZZ	6205 ZZ
213/5T	1.575	5.551	5.250	10.144	11.306	0.761		2.480	3.380	1.203	0.313	1.375	6208 ZZ	6206 ZZ
254/6T	1.693	6.299	6.017	12.010	13.180	0.830		2.756	4.000	1.406	0.375	1.625	6309 Z-C3	6208 Z-C3

TEFC – Rolled Steel NEMA Premium Efficiency continued

Frames 143

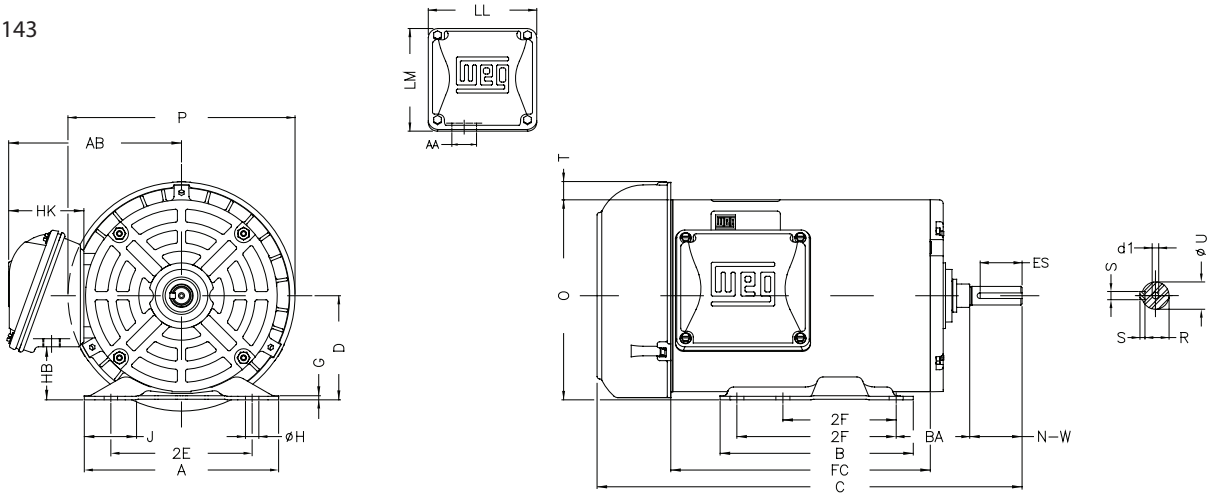

Frames 182

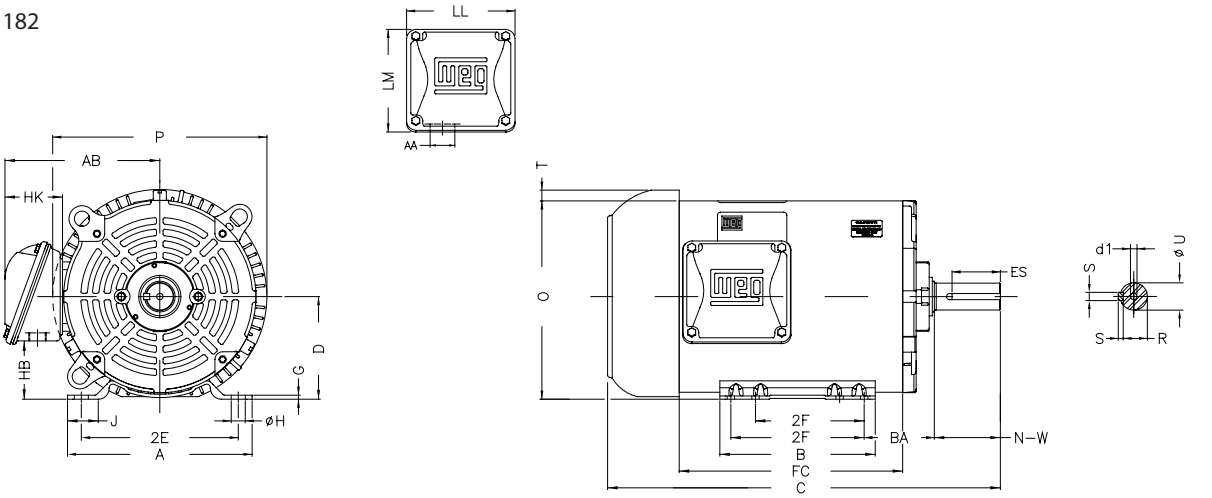

Frame 213 to 256

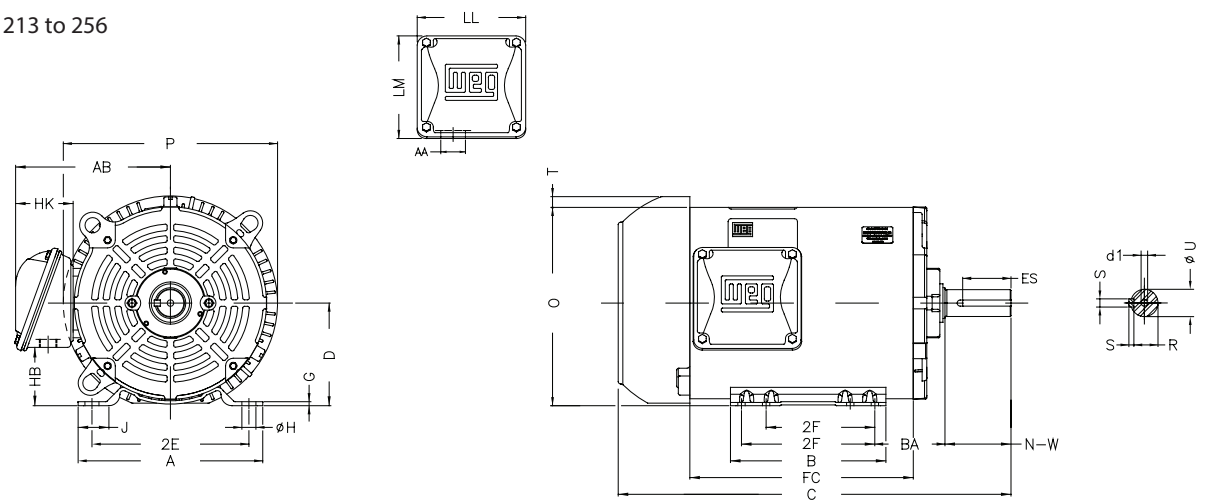

Data subject to change without notice.

C and FC Dimensions

Frame	Output		Pole	C (inches)	FC (inches)
	HP	kW			
143/5T	1	0.75	2	13.189	7.48
143/5T	1	0.75	4	13.583	7.874
143/5T	1	0.75	6	13.583	7.874
143/5T	1.5	1.1	2	13.189	7.48
143/5T	1.5	1.1	4	13.189	7.48
182/4T	1.5	1.1	6	16.339	8.661
143/5T	2	1.5	2	13.976	8.268
143/5T	2	1.5	4	13.583	8.268
182/4T	2	1.5	6	17.126	9.449
143/5T	3	2.2	2	15.157	9.449
182/4T	3	2.2	2	16.339	8.661
182/4T	3	2.2	4	17.913	10.236
213/5T	3	2.2	6	19.291	10.63
182/4T	5	3.7	2	17.913	10.236
182/4T	5	3.7	4	17.913	9.055
213/5T	5	3.7	6	20.079	11.417
182/4T	7.5	5.5	2	17.126	9.449
213/5T	7.5	5.5	2	20.079	11.417
213/5T	7.5	5.5	4	18.898	10.236
254/6T	7.5	5.5	6	22.559	12.992
213/5T	10	7.5	2	21.654	12.992
213/5T	10	7.5	4	19.291	10.63
254/6T	10	7.5	6	23.346	13.78
213/5T	15	11	2	21.654	12.992
254/6T	15	11	2	22.559	12.992
254/6T	15	11	4	22.559	12.992
254/6T	20	15	2	23.346	13.78
254/6T	20	15	4	23.346	13.78
254/6T	25	18.5	2	23.346	13.78

Dimensions for C-Face motors

Frame	BA	Flange					
		AJ	AK	BB	BD	BF	AH
143/5TC	2.750	5.874	4.500	0.157	6.028	UNC 3/8"x16	2.129
182/4TC	3.500	7.250	8.500	0.250	8.858	UNC 1/2"x13	2.620
213/5TC	4.309				9.401		3.129
254/6TC	4.750				11.084		3.750

TEFC – Rolled Steel NEMA Premium Efficiency continued

Dimensions for C-Face motors

Frames 143

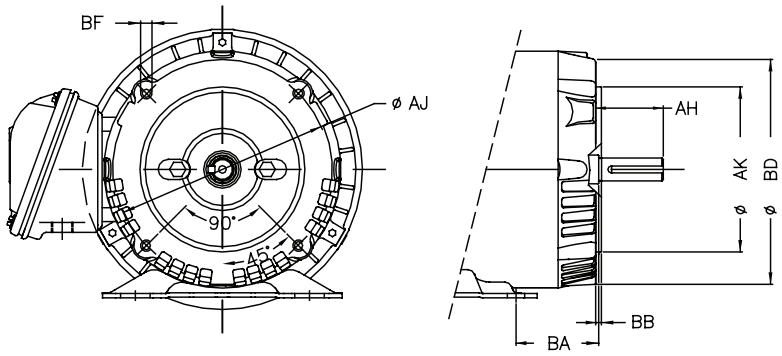

Frames 182

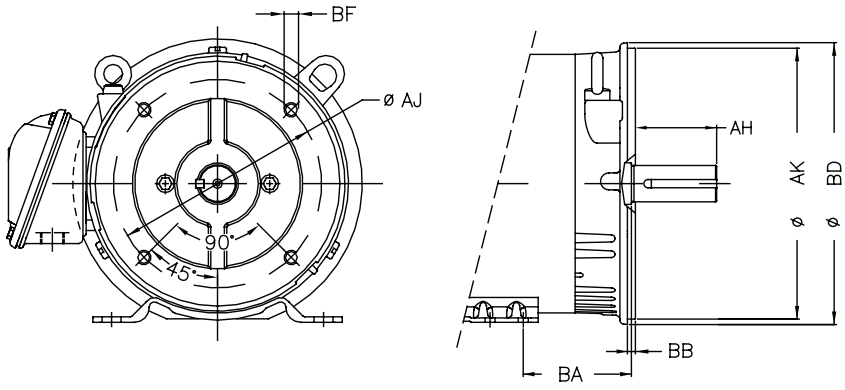

Frame 213 to 254

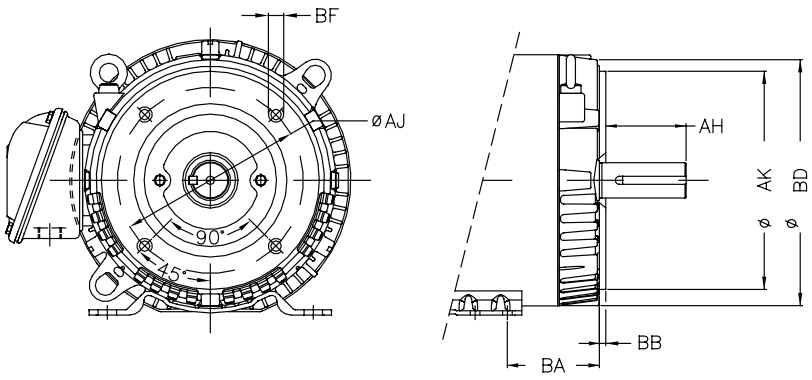

Frame	2E	2F	A	AA	J	AB	B	BA	D	G	HB	HK	Hole H
143/5T	5.500	4.000/5.000	6.535	1.118	1.725	5.873	6.496	2.250	3.500	0.118	1.784	2.629	0.343
182/4T	7.500	4.500/5.500	8.661	1.118	1.299	6.696	6.299	2.750	4.500	0.167	2.784		0.406
213/5T	8.500	5.500/7.000	9.449	1.377	1.575	7.973	7.953	3.500	5.250		2.982	3.022	
254/6T	10.000	8.252/10.000	11.417	1.732	1.693	9.448	11.417	4.250	6.250	0.187	3.631	3.645	0.530

Frame	J	LL	LM	O	P	Shaft end						Bearings	
						d1	ES	N-W	R	S	U	D.E.	N.D.E
143/5T	1.725	4.563	4.090	6.723	6.456	A 3.15	1.417	2.250	0.766	0.187	0.8750	6205 ZZ	6203 ZZ
182/4T	1.299			8.557	8.114	A 4	1.969	2.750	0.984	0.250	1.125	6206 ZZ	6205 ZZ
213/5T	1.575	5.551	5.250	10.144	9.846		2.480	3.380	1.203	0.313	1.375	6208 ZZ	6206 ZZ
254/6T	1.693	6.299	6.017	12.010	11.558		2.756	4.000	1.406	0.375	1.625	6309 Z-C3	6208 Z-C3

ODP – Rolled Steel NEMA Premium Efficiency continued

Frames 143

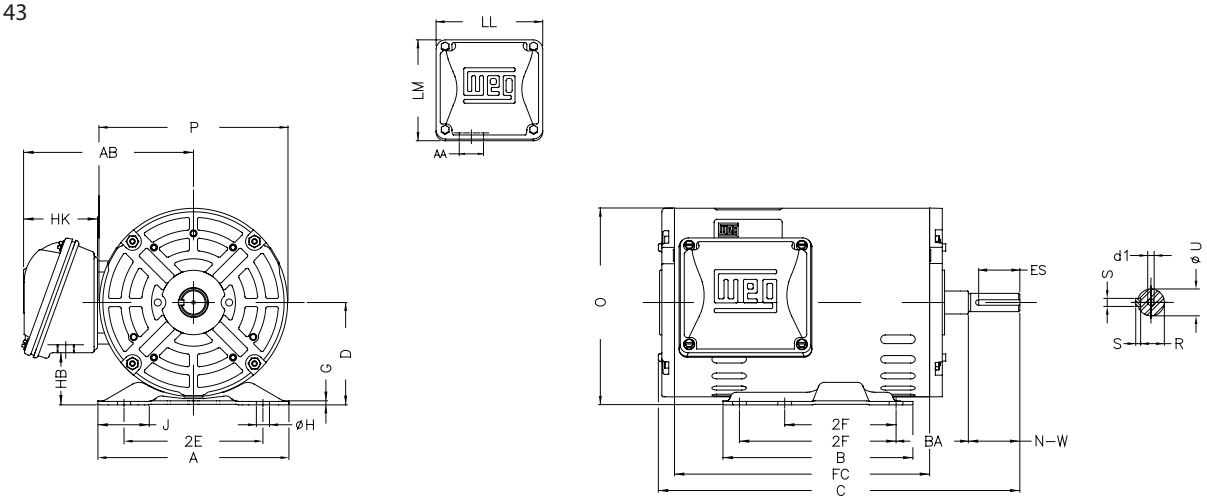

Frames 182

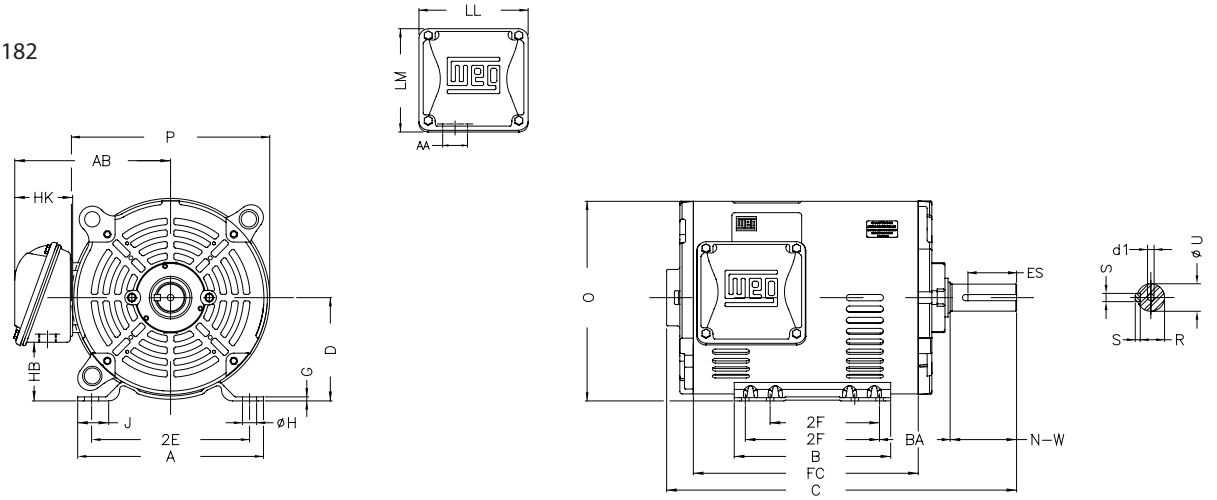

Frame 213 to 256

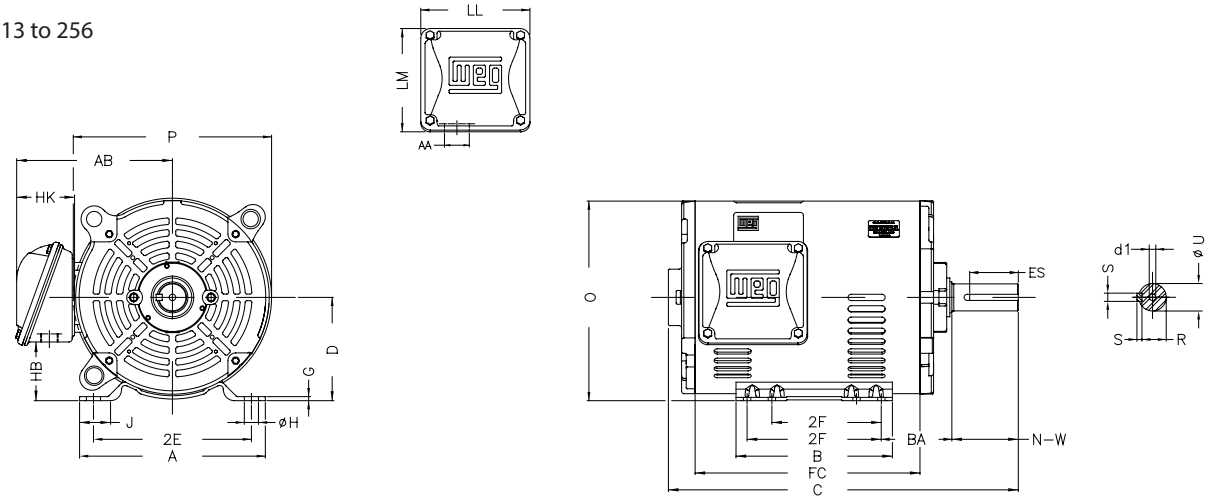

Data subject to change without notice.

C and FC Dimensions

Frame	Output		Pole	C (inches)	FC (inches)
	HP	kW			
143/5T	1	0.75	2	11.181	7.48
143/5T	1	0.75	4	11.181	7.48
143/5T	1	0.75	6	11.181	7.48
143/5T	1.5	1.1	2	11.181	7.48
143/5T	1.5	1.1	4	12.362	8.661
182/4T	1.5	1.1	6	13.976	7.874
143/5T	2	1.5	2	11.969	8.268
143/5T	2	1.5	4	12.362	7.874
182/4T	2	1.5	6	14.764	8.661
143/5T	3	2.2	2	12.362	8.661
182/4T	3	2.2	4	15.157	9.055
213/5T	3	2.2	6	16.575	10.236
182/4T	5	3.7	2	14.764	8.661
182/4T	5	3.7	4	16.339	10.236
213/5T	5	3.7	6	16.969	10.63
182/4T	7.5	5.5	2	15.157	9.055
213/5T	7.5	5.5	4	16.575	10.236
254/6T	7.5	5.5	6	20.472	12.992
213/5T	10	7.5	2	16.969	10.63
213/5T	10	7.5	4	17.756	11.417
254/6T	10	7.5	6	20.472	12.992
213/5T	15	11	2	17.756	11.417
254/6T	15	11	4	20.472	12.992
254/6T	20	15	2	20.472	12.992
254/6T	20	15	4	20.472	12.992
254/6T	25	18.5	2	20.472	12.992

Dimensions for C-Face motors

Frame	BA	Flange					
		AJ	AK	BB	BD	BF	AH
143/5TC	2.750	5.874	4.500	0.157	6.028	JNC 3/8"x16	2.129
182/4TC	3.500	7.250	8.500	0.250	8.858	JNC 1/2"x13	2.620
213/5TC	4.309				9.401		3.129
254/6TC	4.750				11.084		3.750

ODP – Rolled Steel NEMA Premium Efficiency continued

Dimensions for C-Face motors

Frames 143

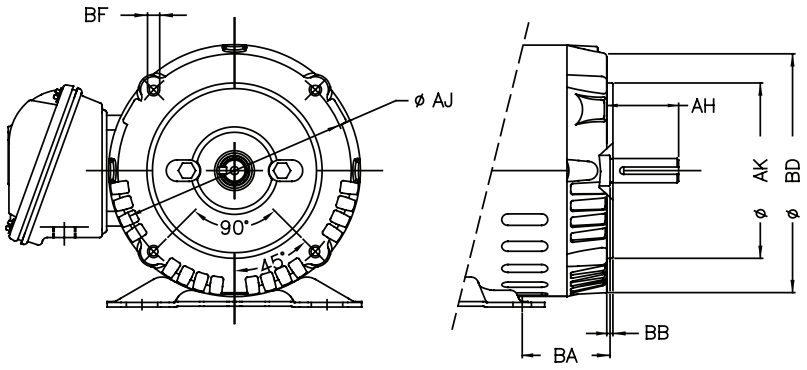

Frames 182

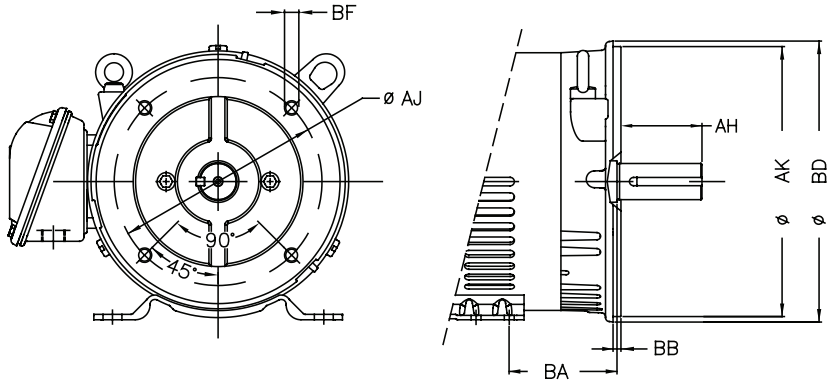

Frames 213 to 254

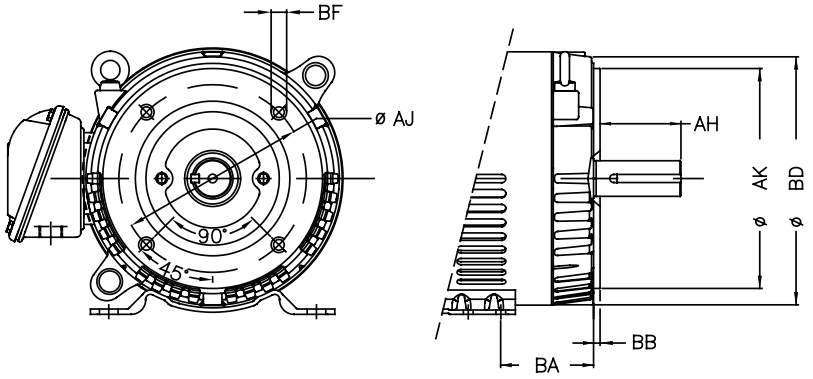

Data subject to change without notice.

Outline drawings on next page

Frame	2E	2F	A	AA	AB	B	BA	C	D	G	Hole H	J
182T	7.500	4.500	8.661	NPT 3/4"	6.476	6.378	2.750	13.504	4.500	0.472	0.406	1.968
184T		5.500				7.165		14.291				
213T	8.500		9.449	NPT 1"	7.264	7.244	3.500	16.378	5.250	0.590		1.496
215T		7.000				8.425		17.165				
254T	10.000	8.250	12.130	NPT 1 1/2"	10.079	10.100	4.250	20.669	6.250	0.787	0.531	2.520
256T		10.000				11.732		22.401				
284T	11.000	9.500	13.780		10.886	11.574	4.750	23.386	7.000	1.102		3.150
284TS								22.000				
286T		11.000				13.070		24.882				
286TS								23.504				
324T	12.500	10.500	15.160	NPT 2"	11.496		5.250	26.181	8.000	1.299	0.656	3.230
324TS								24.685				
326T		12.000				14.566		27.667				
326TS								26.181				
364T	14.000	11.250/12.250	17.170	NPT 3"	16.378	15.400	5.875	29.764	9.000	1.480	0.657	3.150
364TS								27.638				
364/5T								29.764				
365T												
365TS								27.638				
404T	16.000	12.250/13.750	19.950			17.700	6.625	34.133	10.000	1.968	0.807	3.950
404TS								31.141				
404/5T								34.133				
405T												
405TS								31.141				
444T	18.000	14.500/16.500	21.929	2xNPT 3"	20.236	20.078	7.500	39.803	11.000	1.811		3.937
444TS								36.062				
444/5T								39.803				
445T								39.803				
445TS								36.062				
447/9T		20.000/25.000			23.464	28.898		48.317				
447/9TS								44.567				
5010/11T	20.000	32.000/36.000	24.724	2xNPT 4"	29.134	40.472	8.504	62.870	12.5	1.968	1.102	5.236
5010/11TS								56.000				

* Dimensions for 2-pole motors.

** Not applicable.

For C and D Flange detail, see page C-6

ODP – Cast Iron NEMA Premium Efficiency continued

Outline drawings on next page

Frame	K	O	P	T	Shaft end						Bearings	
					d1	ES	N-W	R	S	U	D.E.	N.D.E
182T	1.850	8.890	8.858	2.263	A 4	1.969	2.750	0.984	0.250	1.125	6206 ZZ	6205 ZZ
											6206 ZZ*	6205 ZZ*
184T											6206 ZZ	6205 ZZ
											6206 ZZ*	6205 ZZ*
213T	2.854	9.836	9.173	1.342		2.480	3.375	1.203	0.313	1.375	6208 ZZ	6206 ZZ
215T												
254T	2.560	12.204	11.812	2.165		2.756	4.000	1.406	0.375	1.625	6309 Z-C3	6209 Z-C3
256T												
284T	2.960	13.858	13.700			3.149	4.622	1.594	0.500	1.875	6311 Z-C3	6211 Z-C3
284TS						2.480	3.250	1.406	0.375	1.625		
286T						3.149	4.622	1.594	0.500	1.875		
286TS						2.480	3.250	1.406	0.75	1.625		
324T	3.350	15.551	15.118	2.559		3.937	5.250	1.844	0.500	2.125	6312 Z-C3	6212 Z-C3
324TS						2.756	3.750	1.594		1.875		
326T						3.937	5.250	1.844		2.125		
326TS						2.756	3.750	1.594		1.875		
364T	4.140	18.425	17.874	2.795	DUNC 3/4"-10	4.330	5.874	2.019	0.625	2.375	6314 C3	6314 C3
364TS						1.968	3.748	1.591	0.500	1.875		
364/5T						4.330	5.874	2.019	0.625	2.375		
365T												
365TS						1.968	3.748	1.591	0.500	1.875		
404T	5.440	19.409		2.800		5.512	7.250	2.449	0.750	2.875	6316 C3	
404TS						2.756	4.250	1.842	0.500	2.125	6314 C3	
404/5T						5.512	7.250	2.449	0.750	2.875	6316 C3	
405T												
405TS						2.756	4.250	1.842	0.500	2.125	6314 C3	
444T	5.590	22.440	22.125	3.544		7.087	8.500	2.880	0.875	3.375	6319 C3	6316 C3
444TS						3.000	4.750	2.021	0.625	2.375	6314 C3	6314 C3
444/5T						7.087	8.500	2.880	0.875	3.375	6319 C3	6316 C3
445T												
445TS						3.000	4.750	2.021	0.625	2.375	6314 C3	6314 C3
447/9T	10.47					7.087	8.500	2.880	0.875	3.375	6319 C3	6316 C3
447/9TS						3.000	4.750	2.019	0.625	2.375	6314 C3	6314 C3
5010/11T	14.370	27.165	30.670	**		8.661	10.630	3.134	0.875	3.625	6319 C3	
5010/11TS						3.000	4.750	2.275	0.625	2.625	6314 C3	

* Dimensions for 2-pole motors.
** Not applicable.

For C and D Flange detail, see page C-6

Data subject to change without notice.

ODP – Cast Iron NEMA Premium Efficiency continued

Frames 254T to 447/9TS | 5010/11T and 5010/11TS

Frame 254T to 447/9TS

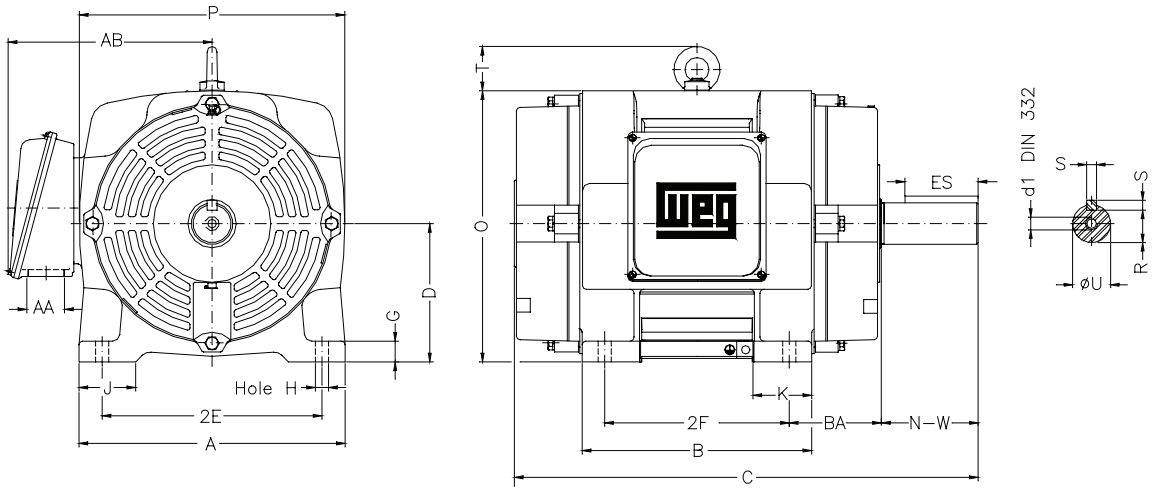

Frame 5010/11T and 5010/11TS

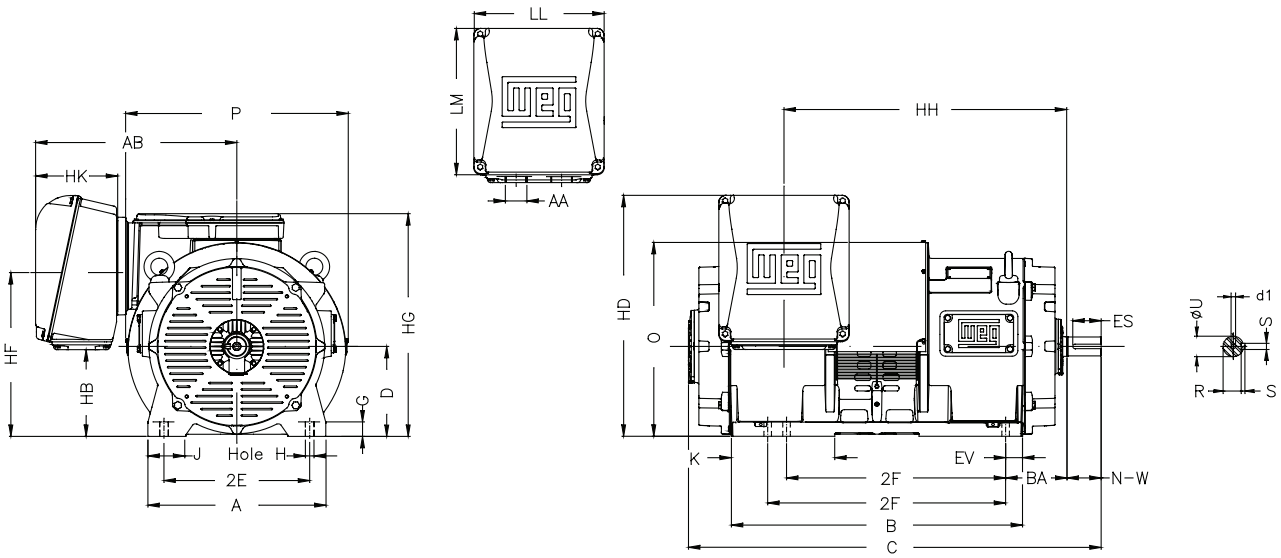

For C and D Flange detail, see page C-6

TEFC – Explosion Proof

Outline drawings on next page

Frame	2E	2F	A	AA	AB	B	BA	C	D	G	Hole H	J
143T	5.500	4.000	6.457	NPT 3/4"	6.811	5.157	2.250	12.760	3.500	0.429	0.344	1.496
145T		5.000				6.142		13.752				
182T	7.500	4.500	8.661		8.240	5.945	2.750	14.862	4.500	0.787	0.406	1.890
184T		5.500				6.969		15.862				
213T	8.500		9.764	NPT 1"	9.252	7.402	3.500	17.952	5.250	0.827		2.008
215T		7.000				8.898		19.450				
254T	10.000	8.252	12.126	NPT 1 1/2"	11.063	10.000	4.250	23.175	6.250	0.817	0.531	2.520
256T		10.000				11.732		24.923				
284T	11.000	9.500	13.780		11.850	11.575	4.750	26.407	7.000	1.024		3.150
284TS								25.033				
286T		11.000				13.071		27.905				
286TS								26.531				
324T	12.500	10.500	15.157	NPT 2"	12.961		5.250	29.602	8.000	1.307	0.657	3.228
324TS								28.102				
326T		12.000				14.567		31.106				
326TS								29.606				
364/5T	14.000	11.250/12.250	17.165	NPT 3"	16.654	15.394	5.875	33.701	9.000	1.480		3.150
364/5TS								31.575				
404/5T	16.000	12.250/13.752	19.921			17.520	6.625	38.074	10.000	1.812	0.807	3.937
404/5TS								35.074				
444/5T	18.000	14.500/16.500	21.929	2xNPT 3"	21.732	20.079	7.500	43.797	11.000	1.630		
444/5TS								40.047				
447T		20.000			20.984	23.640		47.339				
447TS								43.589				
449T		25.000				32.126		54.996				
449TS								51.246				
504/5T	20.000	16.000/18.000	24.724		21.850	21.969	8.500	49.445	12.500	2.146	1.250	4.724
504/5TS								46.875				
586/7T	23.000	22.000/25.000	29.528		25.787	29.921	10.00	61.389	14.500	2.492	1.181	5.236
586/7TS								54.514				

Data subject to change without notice.

Frames 143T to 586/7TS

Frame	K	O	P	T	Shaft end						Bearings	
					d1	ES	N-W	R	S	U	D.E.	N.D.E
143T	1.654	7.000	7.000	*	A 4	1.575	2.250	0.765	0.187	0.875	6205 ZZ	6204 ZZ
145T												
182T	1.969	9.421	8.909	1.772		1.969	2.750	0.984	0.250	1.125	6307 ZZ	6206 ZZ
184T												
213T	2.165	11.156	10.709			2.480	3.375	1.203	0.313	1.375	6308 ZZ	6207 ZZ
215T												
254T	2.559	12.352	12.224	2.087		2.756	4.000	1.406	0.375	1.625	6309 ZZ-C3	6209 ZZ-C3
256T												
284T	2.953	14.362		2.441		3.149	4.622	1.594	0.500	1.875	6311 ZZ-C3	6211 ZZ-C3
284TS			14.094			2.480	3.250	1.406	0.375	1.625		
286T						3.149	4.622	1.594	0.500	1.875		
286TS						2.480	3.250	1.406	0.375	1.625		
324T	3.346	15.992	15.697	2.795		3.937	5.250	1.844	0.500	2.125	6312 ZZ-C3	6212 ZZ-C3
324TS						2.756	3.750	1.594		1.875		
326T						3.937	5.250	1.844		2.125		
326TS						2.756	3.750	1.594		1.875		
364/5T	4.134	18.898	18.583		DUNC3/4"-10	4.330	5.874	2.019	0.625	2.375	6314 C3	6314 C3
364/5TS						1.968	3.748	1.591	0.500	1.875		
404/5T	5.433	19.843				5.512	7.250	2.449	0.750	2.875	6217 C3	
404/5TS						2.756	4.250	1.842	0.500	2.125	6314 C3	
444/5T	5.591	23.622	24.016	3.543		7.087	8.500	2.880	0.875	3.375	6219 C3	6316 C3
444/5TS						3.000	4.750	2.021	0.625	2.375	6314 C3	6314 C3
447T						7.087	8.500	2.880	0.875	3.375	6319 C3	6316 C3
447TS						3.000	4.750	2.021	0.625	2.375	6314 C3	6314 C3
449T	7.104					7.087	8.500	2.880	0.875	3.375	6322 C3	6319 C3
449TS						3.000	4.750	2.021	0.625	2.375	6314 C3	6314 C3
504/5T	5.984	25.197	24.212			8.661	10.630	3.134	0.875	3.625	6319 C3	6316 C3
504/5TS						3.000	4.750	2.021	0.625	2.375	6316 C3	
586/7T	7.874	30.428	30.709	4.291	DUNC 7/8"-9	8.661	11.625	3.312	1000.000	3.875	6322 C3	6319 C3
586/7TS					DUNC3/4"-10	3.000	4.750	2.021	0.625	2.375	6314 C3	6314 C3

Frames 143T to 586/7TS

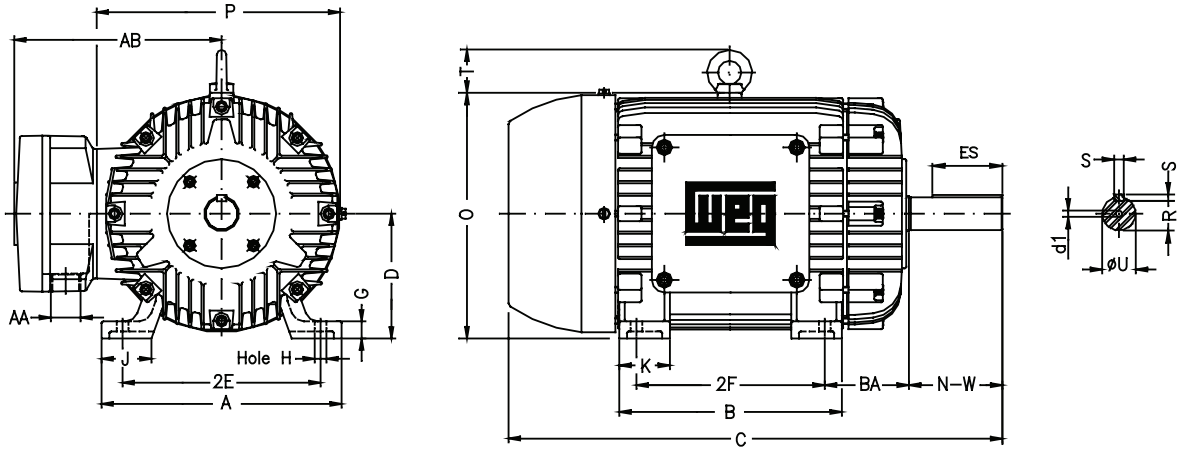

IEC – General Purpose – W22 – Cast Iron Frame

Frames 63 to 132M/L

Frame	A	AA	AB	AC	AD	B	BA	BB	C	CA	H	HA	HB	HC	HD	HF	HG	HH	HK	K
63	100	25.5	116	125	123	80		95	40	78	63	7	25.5	130		68.5		80		7
71	112	28.5	132	141	131	90		113.5	45	88	71		33	145		76		90	59	
80	125	30.5	149	159	140	100		125.5	50	93	80	8	43.5	163		87		100		
90L						125		156		104					**			118.5		
90S	140	36.5	164	179	159	100		131	56	104	90	9	45	182		90		106		10
L90L						125		156		135								118.5	67	
L90S						100	**	131		135								106		
100L	160	40	188	199	169	140		173	63	118	100	10	61.5	205	244	106.4		133		12
L100L																				
112M	190	40.5	220	222	192			177	70	128	112		54.5	235	280	112	**	140		
L112M																				
132M						178		225										178	80	
132S	216	45	248	272	220	140		187	89	150	132	16	75	274	319	132		159		
132M/L						178/203		250										190.5		
160L	254	64	308	329	266	254	63	298	108	174	160	22	79	331	374	168		235	101	14.5
160M						210	63	254										213		
180L	279	78	350	360	281	279	70	332	121	200	180	28	92	366	413	180		260.5		
180M						241	70	294										241.5		
200L	318	82	385	402	319	305	82	370	133	222	200	30	119	407	464	218		285.5	119..5	18.5
225S/M	356	80	436	455	408	286/311	124	412	149	319/294	225	34	255	453	550	403	523	212	153	24
250S/M	406	100	506	486		311/349	146	467	168	354/316	250	43	290	493	583	449	566	214		
280S/M	457		557	599	450	368/419	151	517	190	385/334	280	42	383	580	696	556	686	266	147	
315L	508	120	630	657	589	508	219	752	216	502	315	48	336	644	774	575	760	284	220	28
315S/M					525	406/457	184	621		494/443			386		768	592	751	264	176	
355M/L	610	140	750	736	609	560/630	230	760	254	483/413	355	50	461	723	898	700	885	340	220	

* Dimensions for 2-pole motors.
** Not applicable.

Data subject to change without notice.

IEC – General Purpose – W22 – Cast Iron Frame continued

Frame	L	LC	LL	LM	S1	D.E. Shaft end							N.D.E. Shaft end							Bearings	
						D	d1	E	ES	F	G	GD	d2	DA	EA	FA	GB	GF	TS	D.E.	N.D.E.
63	216	241	108.5	99	2xM20x1.5	11j6	EM4	23	14	4	8.5	4	EM3	9j6	20	3	7.2	3	12	6201 ZZ	6201 ZZ
71	248	276				14j6	DM5	30	18	5	11	5	EM4	11j6	23	4	8.5	4	14	6202 ZZ	6202 ZZ
80	276	313				19j6	DM6	40	28	6	15.5	6	DM4	14j6	30	5	11	5	18	6204 ZZ	6203 ZZ
90L	329	375	115	104	2xM25x1.5	24j6	DM8	50	36	8	20	7	DM6	16j6	40		13		28	6205 ZZ	6204 ZZ
90S	304	350																			
L90L	360	406																			
L90S	335	381																			
100L	376	431				28j6	DM10	60	45		24		DM8	22j6	50	6	18.5	6	36	6206 ZZ	6205 ZZ
L100L	**	**																			
	420	475												24j6		8	20	7		6207 ZZ	6206 ZZ
112M	393	448	140	133	2xM32x1.5																
L112M	423	478																			
132M	490	557				38k6	DM12	80	63	10	33	8	DM10	28j6	60		24		45	6308 ZZ	6207 ZZ
132S	452	519																			
132M/L	515	582																			
160L	642	756	198.5	190	2xM40x1.5	42k6	DM16	110	80	12	37		DM16	42k6	110	12	37	8	80	6309 C3	6209 C3
160M	598	712																			
180L	702	820				48k6				14	42.5	9		48k6		14	42.5	9		6311 C3	6211 C3
180M	664	782																			
200L	767	880	230	220	2xM50x1.5	55m6	DM20			16	49	10	DM20	60m6	140	18	53	11	125	6312 C3	6212 C3
225S/M	886	1034	269	285		60m6		140	125	18	53	11								6314 C3	6314 C3
	856*	974*				55m6*		110*	100*	16*	49*	10*		55m6*	110*	16*	49*	10*	100		
250S/M	965	1113			2xM63x1.5	65m6		140	125	18	58	11		60m6	140	18	53	11	125		
						60m6*					53*										
280S/M	1071	1223	314	312		75m6				20	67.5	12		65m6			58			6316 C3	6316 C3
						65m6*				18*	58*	11*		60m6*			53*			6314 C3*	6314 C3*
315L	1383	1536	404	436		80m6		170	160	22	71	14		65m6			58			6319 C3	6316 C3
	1353*	1501*				65m6*		140*	125*	18*	58*	11*		60m6*			53*			6314 C3*	6314 C3*
315S/M	1274	1426	379	382		80m6		170	160	22	71	14		65m6			58			6319 C3	6316 C3
	1244*	1392*				65m6*		140*	125*	18*	58*	11*		60m6*			53*			6314 C3*	6314 C3*
355M/L	1482	1677	404	436		100m6	DM24	210	200	28	90	16		80m6	170	22	71	14	160	6322 C3	6319 C3
	1412*	1577*				75m6*	DM20*	140*	125*	20*	67.5*	12*		60m6*	140*	18*	53*	11*	125	6316 C3*	6314 C3*

* Dimensions for 2-pole motors.
** Not applicable.

IEC – General Purpose – W22 – Cast Iron Frame
continued

Frames 63 to 132M/L

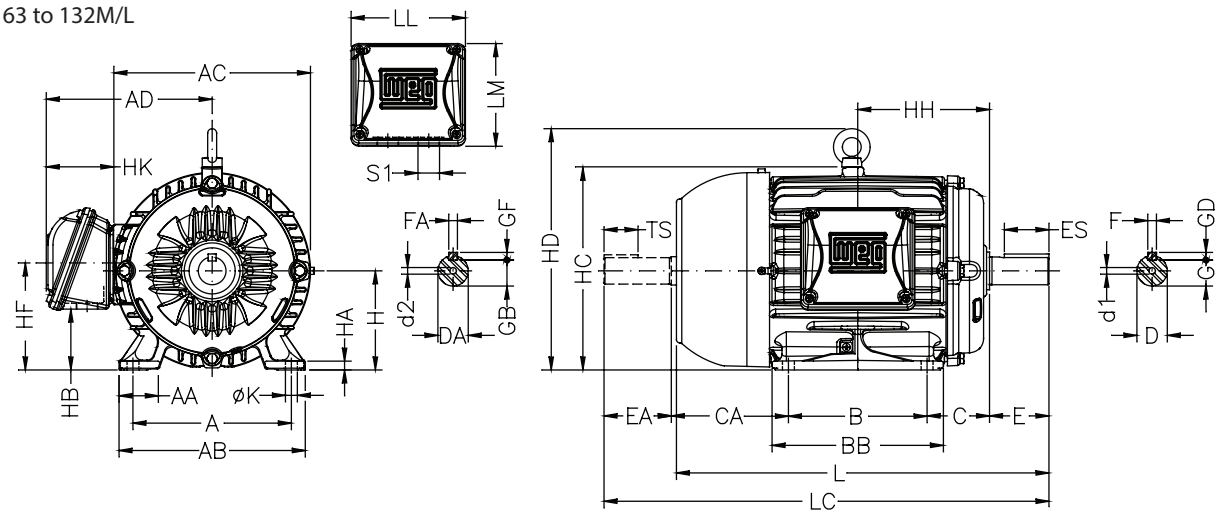

Frames 160L to 200L

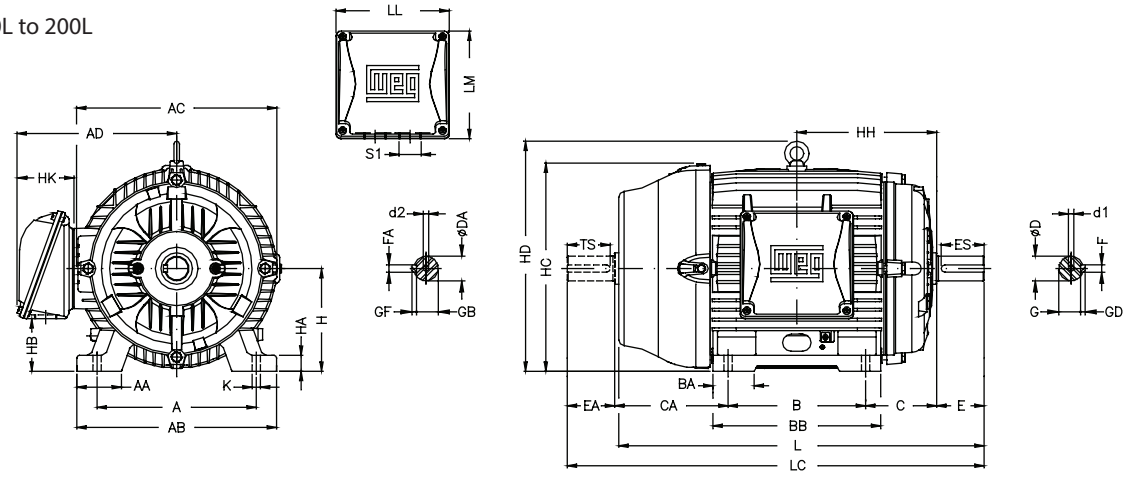

Frames 225S/M to 355M/L

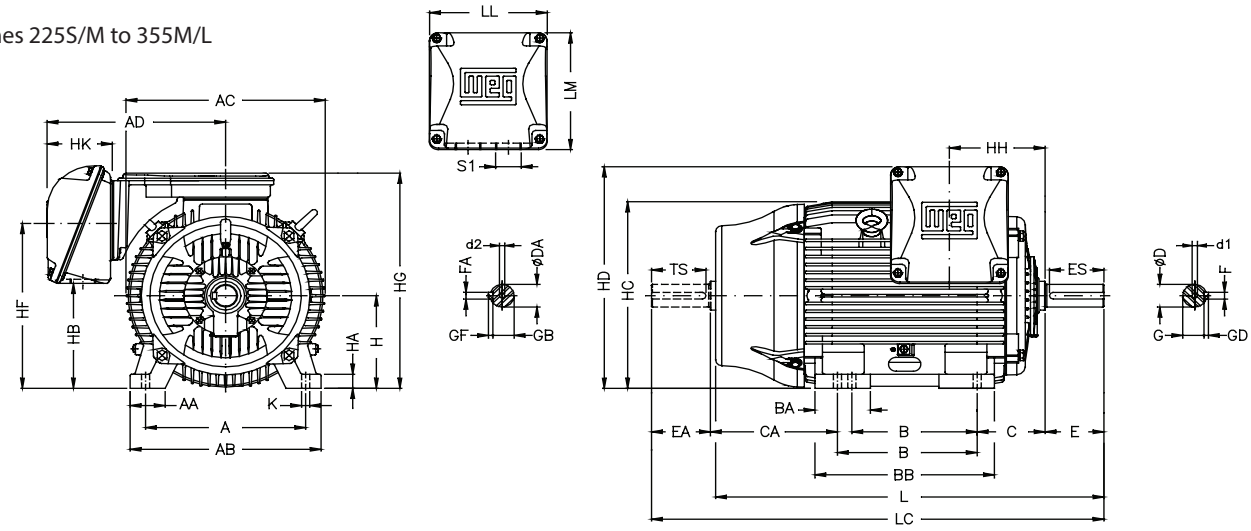

Data subject to change without notice.

IEC TRU-METRIC™ – Three Phase – Cast Iron Frame (Additional Flange detail)

All dimensions in milimeters

Frame	Type	Flange	Size	LA	M	N	P	S	T	Holes
63	C	FC	FC-95	8.5	95.2	76.2	143	UNC 1/4”x20	4	4
63	C	C-DIN	C-90	9.5	75	60	90	M5	2.5	4
71	C	FC	FC-95	10	95.2	76.2	143	UNC 1/4”x20	4	4
71	C	C-DIN	C-105	8	85	70	105	M6	2.5	4
80	C	FC	FC-95	10	95.2	76.2	143	UNC 1/4”x20	4	4
80	C	C-DIN	C-120	10.5	100	80	120	M6	3	4
90S	C	FC	FC-149	15	149.2	114.3	165	UNC 3/8”x16	4	4
90S	C	C-DIN	C-140	10.5	115	95	140	M8	3	4
90L	C	FC	FC-149	15	149.2	114.3	165	UNC 3/8”x16	4	4
90L	C	C-DIN	C-140	10.5	115	95	140	M8	3	4
L90L	C	FC	FC-149	15	149.2	114.3	165	UNC 3/8”x16	4	4
L90L	C	C-DIN	C-140	10.5	115	95	140	M8	3	4
100L	C	FC	FC-149	12	149.2	114.3	165	UNC 3/8”x16	4	4
100L	C	C-DIN	C-160	12	130	110	160	M8	3.5	4
112M	C	FC	FC-184	13.5	184.2	215.9	225	UNC 1/2”x13	6.3	4
112M	C	C-DIN	C-160	13.5	130	110	160	M8	3.5	4
132S	C	FC	FC-184	9	184.2	215.9	225	UNC 1/2”x13	6.3	4
132S	C	C-DIN	C-200	15.5	165	130	200	M10	3.5	4
L100L	C	FC	FC-149	12	149.2	114.3	165	UNC 3/8”x16	4	4
L100L	C	C-DIN	C-160	12	130	110	160	M8	3.5	4
132M	C	FC	FC-184	9	184.2	215.9	225	UNC 1/2”x13	6.3	4
132M	C	C-DIN	C-200	15.5	165	130	200	M10	3.5	4
160M	C	FC	FC-184	19.5	184.2	215.9	225	UNC 1/2”x13	6.3	4
132M/L	C	FC	FC-184	9	184.2	215.9	225	UNC 1/2”x13	6.3	4
132M/L	C	C-DIN	C-200	15.5	165	130	200	M10	3.5	4
160L	C	FC	FC-184	19.5	184.2	215.9	225	UNC 1/2”x13	6.3	4
180M	C	FC	FC-228	13.5	228.6	266.7	280	UNC 1/2”x13	6.3	4
180L	C	FC	FC-228	13.5	228.6	266.7	280	UNC 1/2”x13	6.3	4
200L	C	FC	FC-228	13.5	228.6	266.7	280	UNC 1/2”x13	6.3	4
225S/M	C	FC	FC-279	18.5	279.4	317.5	395	UNC 5/8”x11	6.3	8
250S/M	C	FC	FC-355	18.5	355.6	406.4	455	UNC 5/8”x11	6.3	8
280S/M	C	FC	FC-355	18.5	355.6	406.4	455	UNC 5/8”x11	6.3	8
315S/M	C	FC	FC-368	18.5	368.3	419.1	455	UNC 5/8”x11	6.3	8
315L	C	FC	FC-368	18.5	368.3	419.1	455	UNC 5/8”x11	6.3	8
355M/L	C	FC	FC-368	33.5	368.3	419.1	455	UNC 5/8”x11	6.3	8

FC & C-DIN Flanges

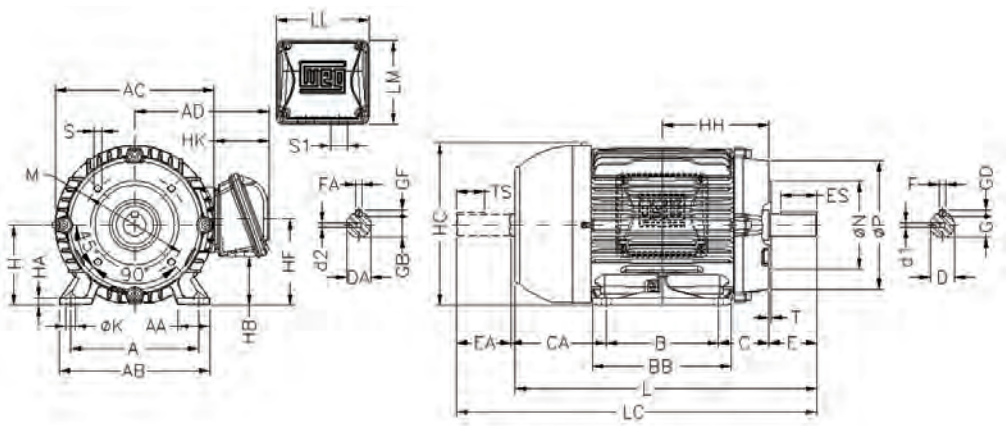

MechanicalData

IEC TRU-METRIC™ – Three Phase – Cast Iron Frame (Additional Flange detail)

Frame	Type	Flange	Size	LA	M	N	P	S	T	Holes
63	F	FF	FF-115	9	115	95	140	10	3	4
71	F	FF	FF-130	9	130	110	160	10	3.5	4
80	F	FF	FF-165	10	165	130	200	12	3.5	4
90S	F	FF	FF-165	10	165	130	200	12	3.5	4
90L	F	FF	FF-165	10	165	130	200	12	3.5	4
L90L	F	FF	FF-165	10	165	130	200	12	3.5	4
100L	F	FF	FF-215	11	215	180	250	15	4	4
112M	F	FF	FF-215	11	215	180	250	15	4	4
132S	F	FF	FF-265	12	265	230	300	15	4	4
L100L	F	FF	FF-215	11	215	180	250	15	4	4
132M	F	FF	FF-265	12	265	230	300	15	4	4
160M	F	FF	FF-300	18	300	250	350	19	5	4
132M/L	F	FF	FF-265	12	265	230	300	15	4	4
160L	F	FF	FF-300	18	300	250	350	19	5	4
180M	F	FF	FF-300	18	300	250	350	19	5	4
180L	F	FF	FF-300	18	300	250	350	19	5	4
200L	F	FF	FF-350	18	350	300	400	19	5	4
225S/M	F	FF	FF-400	18	400	350	450	19	5	8
250S/M	F	FF	FF-500	18	500	450	550	19	5	8
280S/M	F	FF	FF-500	18	500	450	550	19	5	8
315S/M	F	FF	FF-600	22	600	550	660	24	6	8
315L	F	FF	FF-600	22	600	550	660	24	6	8
355M/L	F	FF	FF-740	22	740	680	800	24	6	8

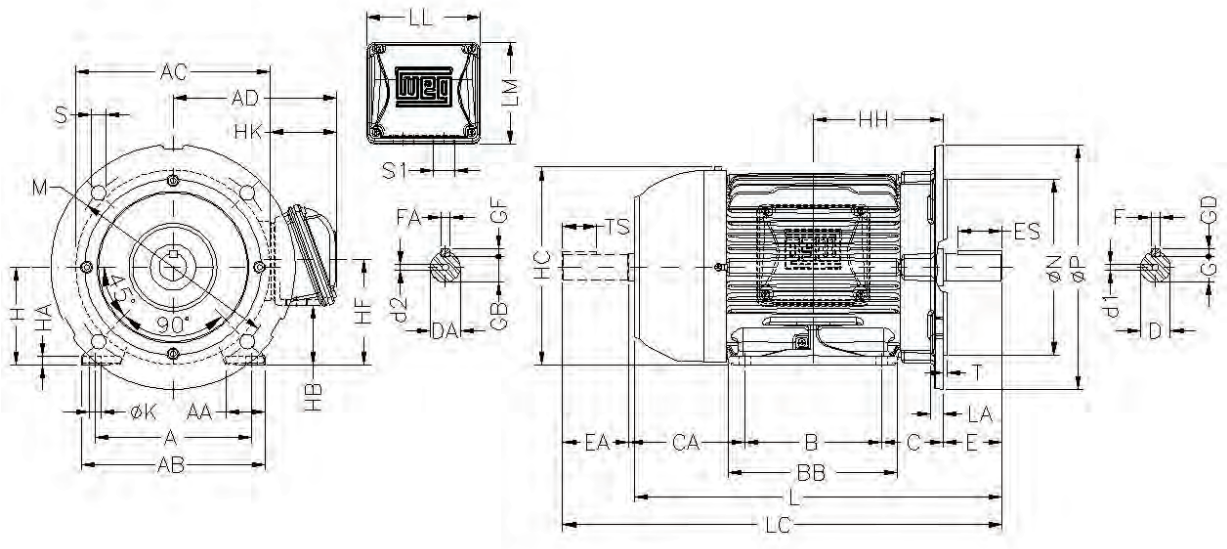

Data subject to change without notice.

Frame	A	AA	AB	AC	AD	B	BA	BB	C	CA	H	HA	HC	K	L	LC	S1
63	100	19	116	125	119	80	23	95	40	78	63	6	125	7	216	241	NPT 1/2"
71	112	28	134	140	127	90	24.5	108	45	88	71		139		248	276	
80	125	32	155	159	136	100	28	124	50	93	80	8	157	10	276	313	
90S/L	140	35	170	179	155	100/125	24	146	56	104	90	9	177		329	375	NPT 3/4"
100L	160	40	196	200	165	140	30	170	63	118	100	12	198	12	376	431	
112M	190	46	220	223	184		32		70	128	112		235		393	448	NPT 1"
132S	216	44	248	270	212		37		89	150	132		274		490	557	
132M						178		210									

Frame	D.E. Shaft end							N.D.E.. Shaft end							Bearings	
	D	d1	E	ES	F	G	GD	d2	DA	EA	FA	GB	GF	TS	D.E.	N.D.E.
63	11j6	EM4	23	14	4	8.5	4	EM3	9j6	20	3	7.2	3	12	6201 ZZ	6201 ZZ
71	14j6	DM5	30	18	5	11	5	EM4	11j6	23	4	8.5	4	14	6203 ZZ	6202 ZZ
80	19j6	DM6	40	28	6	15.5	6	DM4	14j6	30	5	11	5	18	6204 ZZ	6203 ZZ
90S/L	24j6	DM8	50	36	8	20	7	DM6	16j6	40		13		28	6205 ZZ	6204 ZZ
100L	28j6	DM10	60	45		24		DM8	22j6	50	6	18.5	6	36	6206 ZZ	6205 ZZ
112M									24j6		8	20	7		6307 ZZ	6206 ZZ
132S	38j6	DM12	80	63	10	33	8	DM10	28j6	60		24		45	6308 ZZ	6207 ZZ
132M																

Frames 63 to 132M

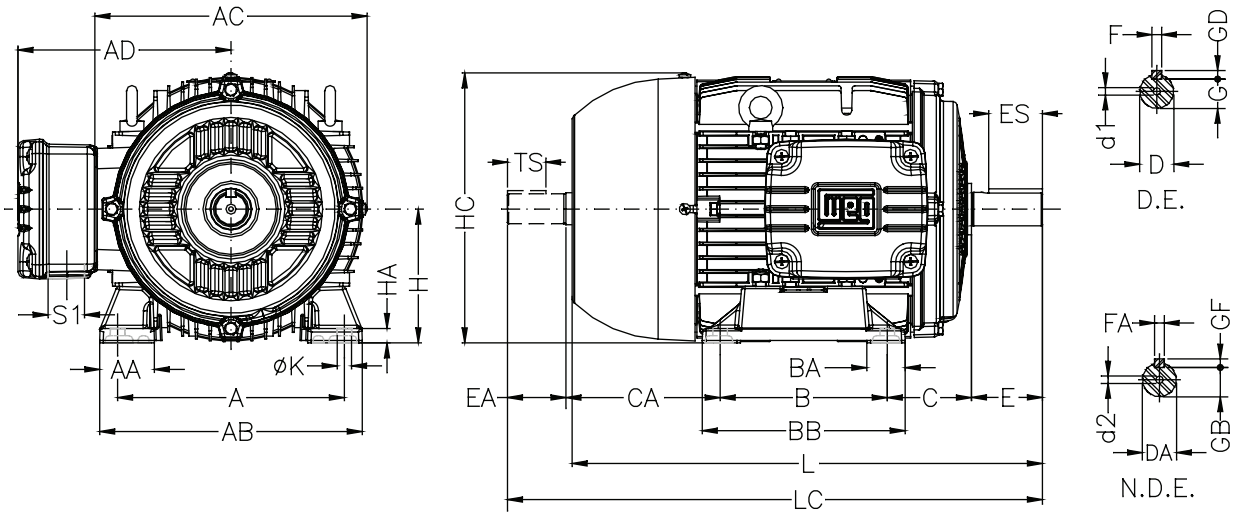

IEC TRU-METRIC™ – Three Phase – Aluminum Frame (Flange additional details)

All dimensions in milimeters

Frame	Type	Flange	Size	LA	M	N	P	S	T	Holes
63	C	FC	FC-95	---	95.2	76.2	143	UNC 1/4"x20	4	4
63	C	C-DIN	C-90	---	75	60	90	M5	2.5	4
71	C	FC	FC-95	---	95.2	76.2	143	UNC 1/4"x20	4	4
71	C	C-DIN	C-105	---	85	70	105	M6	2.5	4
80	C	FC	FC-95	---	95.2	76.2	143	UNC 1/4"x20	4	4
80	C	C-DIN	C-120	---	100	80	120	M6	3	4
90S/L	C	FC	FC-149	---	149.2	114.3	165	UNC 3/8"x16	4	4
90S/L	C	C-DIN	C-140	---	115	95	140	M8	3	4
100L	C	FC	FC-149	---	149.2	114.3	165	UNC 3/8"x16	4	4
100L	C	C-DIN	C-160	---	130	110	160	M8	3.5	4
112M	C	FC	FC-184	---	184.2	215.9	225	UNC 1/2"x13	4	4
112M	C	C-DIN	C-160	---	130	110	160	M8	3.5	4
132S	C	FC	FC-184	---	184.2	215.9	225	UNC 1/2"x13	4	4
132S	C	C-DIN	C-200	---	165	130	200	M10	3.5	4
132M	C	FC	FC-184	---	184.2	215.9	225	UNC 1/2"x13	4	4
132M	C	C-DIN	C-200	---	165	130	200	M10	3.5	4

IEC TRU-METRIC™ – Three Phase – Aluminum Frame (Flange additional details)

All dimensions in milimeters

Frame	Type	Flange	Size	LA	M	N	P	S	T	Holes
63	F	FF	FF-115	9	115	95	140	10	3	4
71	F	FF	FF-130	9	130	110	160	10	3.5	4
80	F	FF	FF-165	10	165	130	200	12	3.5	4
90S/L	F	FF	FF-165	10	165	130	200	12	3.5	4
100L	F	FF	FF-215	11	215	180	250	15	4	4
112M	F	FF	FF-215	11	215	180	250	15	4	4
132S	F	FF	FF-265	12	265	230	300	15	4	4
132M	F	FF	FF-265	12	265	230	300	15	4	4

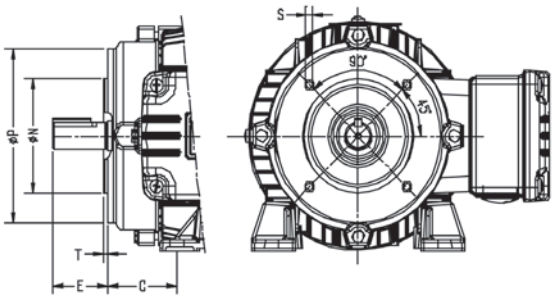

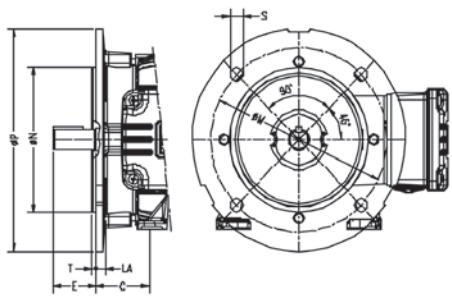

Data subject to change without notice.

Outline drawings on next page

Frame	2E	2F	A	AA	AB	B	BA	C	D	HB	HH	HK	Hole H	J	LL	LM	O	P	S	T
143JM	5.500	4.000	6.457	NPT 3/4"	6.260	5.157	2.560	14.304	3.500	1.787	4.250	2.638	0.344	1.437	4.528	4.094	7.122	7.047	0.187	*
143/5JM		5.000				6.142		15.304			4.750									
145JM																				
182JM	7.500	4.500	8.661	NPT 1"	7.565	5.945	2.750	15.996	4.500	2.236	5.000	3.150	0.406	1.614	5.512	5.236	9.343	8.740		1.772
182/4JM		5.500				6.969		17.020			5.500									
184JM		5.500																		
213JM	8.500		9.764		8.583	7.362	3.500	18.892	5.250	2.985	6.250			1.772			10.841	10.669		
213/5JM		7.000				8.858		20.174			7.000									
215JM																				
254JM	10.000	8.252	12.126	NPT 1 1/2"	10.483	10.000	4.250	24.370	6.250	3.061	8.376	3.976	0.531	2.539	7.815	7.480	12.598	12.953	0.250	2.087
254/6JM		10.000				11.732		26.102			9.250									
256JM																				
284JM	11.000	9.500	13.780		11.073	11.575	4.750	27.165	7.000	3.535	9.500			3.110			14.067	14.173		
284/6JM		11.000				13.071		28.700			10.250									
324JM	12.500	10.500	15.157	NPT 2"	12.575		5.250	28.149	8.000	4.811	10.500	4.705	0.657	3.189	9.055	8.661	15.953	15.827		2.441
324/6JM		12.000				14.567		29.645			11.250									
326JM																				
364/5JM	14.016	11.260/12.244	17.165	NPT 3"	16.016	16.220	5.875	33.031	9.000	4.251	12.362	6.024	0.660	3.150	10.591	11.267	17.716	17.914		

* Not applicable.

Frame	Flange						Shaft end											Bearings	
	AH	AJ	AK	BB	BD	BF Number	d1	EL	EM	EP	EQ	ES	ET	N-W	R	T1	T2	U	D.E.	N.D.E.
143JM	4.258	5.874	4.500	0.157	6.496	4	EUNC 3/8"-16	1.156	1.000	1.179	0.630	1.654	2.880	4.258	0.768	0.748	1.102	0.874	6206 ZZ	6204 ZZ
143/5JM															0.767					
145JM																				
182JM								1.250		1.376		1.575							6307 ZZ	6206 ZZ
182/4JM																				
184JM												1.654								
213JM		7.252	8.500	0.248	8.858					1.770					0.768				6309 Z-C3	6207 ZZ
213/5JM															0.767					
215JM																				
254JM	5.250						EUNC 1/2"-13	1.750	1.375	1.750		2.480	3.006	5..249	1.110	0.984	1.496	1.249	6309 C3	6209 C3
254/6JM																				
256JM																				
284JM		11.000	12.500		13.593					2.163									6311 C3	6211 C3
284/6JM																				
324JM										2.360									6312 C3	6212 C3
324/6JM																				
326JM																				
364/5JM					15.562					2.756									6314 C3	6314 C3

* Not applicable.

TEFC – W22 JM continued

Frames 143JM to 215JM

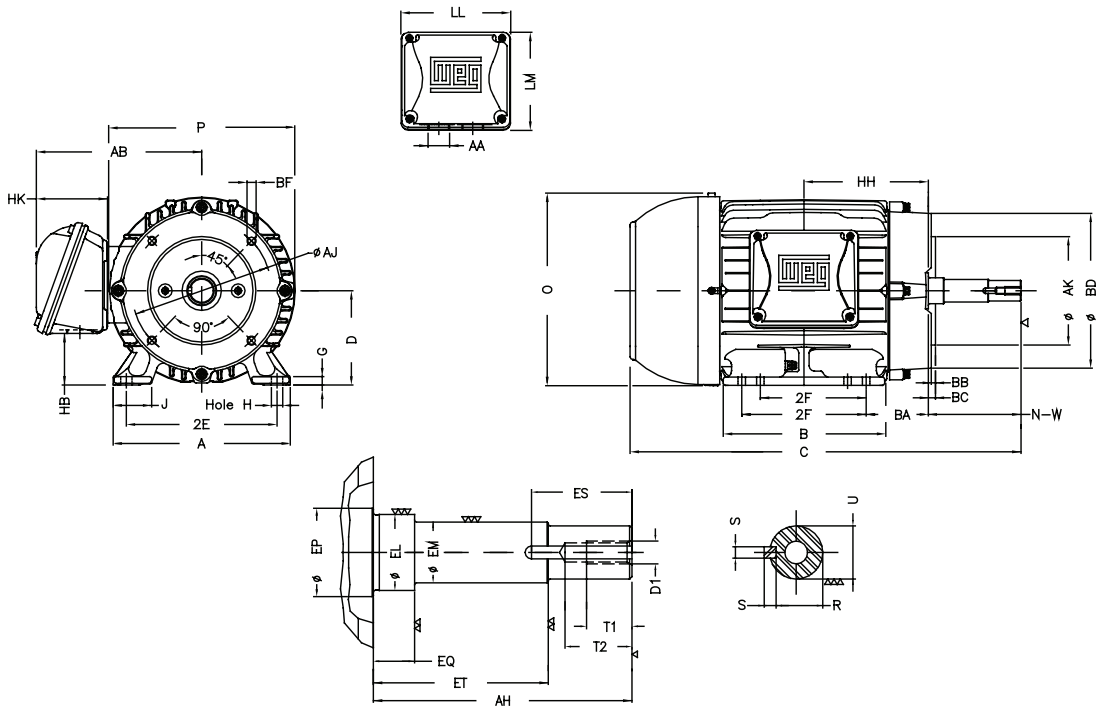

Frames 254JM to 326JM

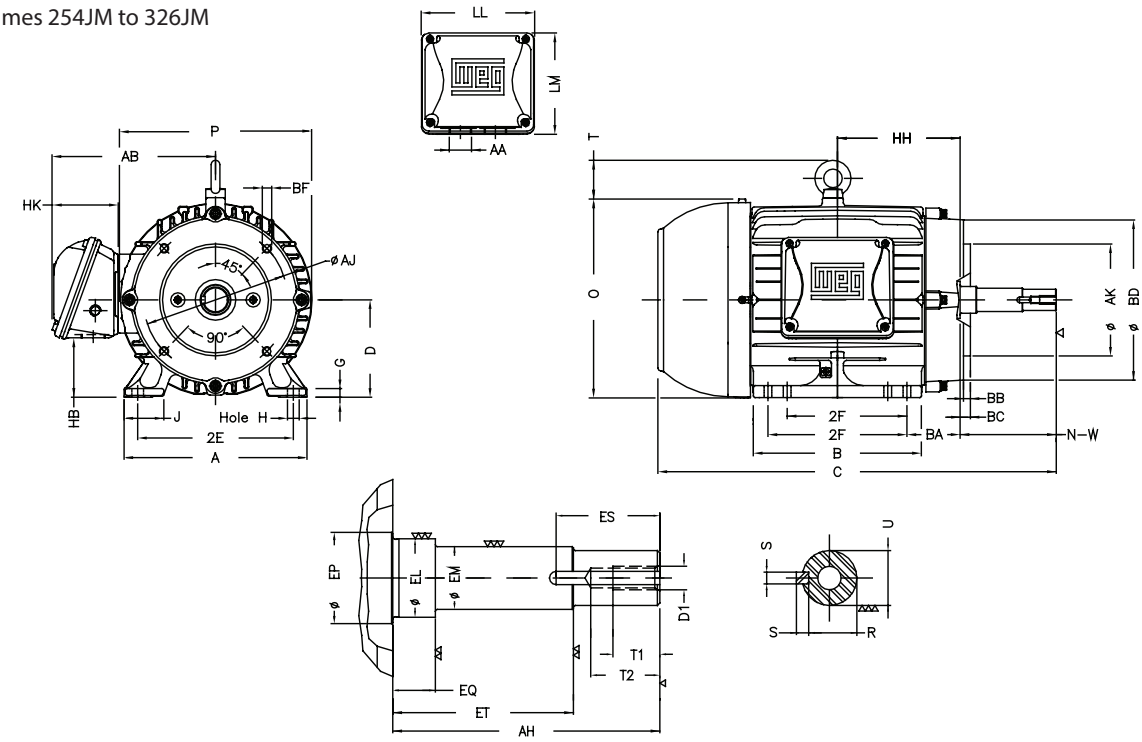

Data subject to change without notice.

Frame 364/5JM

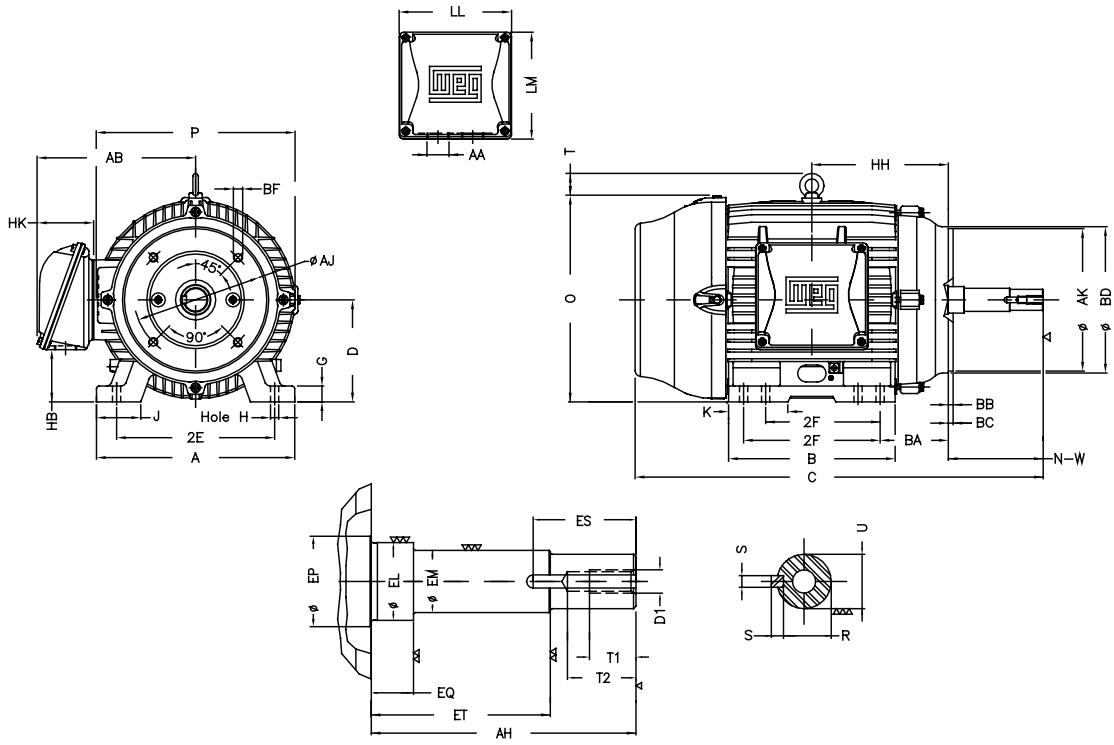

TEFC – W22 JP

Frame	2E	2F	A	AA	AB	B	BA	C	D	EV	G	HB	HH	HK	HoleH	J	K	LL	LM	O	P
143JP		4.000				5.157		17.365					4.250								
145JP	5.500	5.000	6.457	NPT 3/4	6.260	6.142	2.560	18.365	3.500		0.354	1.787	4.750	2.638	0.344	1.437		4.528	4.094	7.122	7.047
143/5JP																					
182JP		4.500				5.945		19.057					5.000				*				
184JP	7.500		8.661		7.565		2.750		4.500		0.394	2.236				1.614				9.343	8.740
182/4JP		5.500		NPT 1″		6.969		20.395					5.500	3.150	0.406			5.512	5.236		
213JP	8.500		9.764		8.583	7.362	3.500	22.550	5.250		0.669	2.985	6.250			1.772	2.165			10.841	10.669
213/5JP		7.000				8.858		24.046					7.000								
254JP		8.252				10.000		26.964		*			8.376								
254/6JP	10.000	10.000	12.126	NPT 1 1/2″	10.483	11.732	4.250	28.736	6.250		0.827	3.061	9.250	3.976	0.531	2.539	2.559	7.815	7.480	12.598	12.953
256JP																					
284JP	11.000	9.500	13.780		11.073	11.575	4.750	30.079	7.000		1.023	3.535	9.500			3.110	2.874			14.067	14.173
284/6JP		11.000				13.071		31.575					10.250								
324JP		10.500						32.525													
324/6JP	12.500	12.000	15.157	NPT 2″	12.575	14.567	5.250	34.021	8.000		1.300	4.811	11	4.705	0.657	3.189	3.189	9.055	8.661	15.953	15.827
326JP													11.250								
364/5JP	14.016	11.260/12.244	17.165	NPT 3″	16.016	16.220	5.875	35.916	9.000	1.654	1.480	4.251	12.362	6.024	0.660	3.150	4.921	10.591	11.267	17.716	17.914
404/5JP	15.984	12.244/13.740	19.921			18.386	6.625	38.911	10.000	2.323	1.811	5.252	14.213		0.810	3.937	5.669			19.566	19.134

Frame	Flange						Shaft end												Bearings	
	AJ	AH	AK	BB	BD	BF Number	d1	EL	EM	EP	EQ	ES	ET	N-W	R	S	T1	T2	U	D.E.	N.D.E.
143JP																					
145JP								1.156		1.179		1.654								6206 ZZ	6204 ZZ
143/5JP	5.874	7.319	4.500	0.157	6.496		EUNC 3/8″-16		1.000		1.563		5.941	7319	0.768	0.187	0.748	1.102	0.874		
182JP								1.250		1.376										6307 ZZ	6206 ZZ
184JP																					
182/4JP												1.575									
213JP																				6309 Z-C3	6207 ZZ
213/5JP																					
254JP	7.252		8.500		8.858	4.000				1.770								1.496		6309 C3	6209 C3
254/6JP																					
256JP																					
284JP								1.750	1.375						1.110	0.250			1.249		
284/6JP		8.130		0.248			EUNC 1/2″-13			2.163	2.382	2.480	5.886	8.130			0.984	1.102		6311 C3	6211 C3
324JP					13.593																
324/6JP	11.000		12.500							2.360								1.496		6312 C3	6212 C3
326JP																					
364/5JP					15.562	8.000		2.125	1.750	2.756					1.413	0.375			1.624	6314 C3	6314 C3
404/5JP																					

Data subject to change without notice.

Frames 143JP to 213/5JP

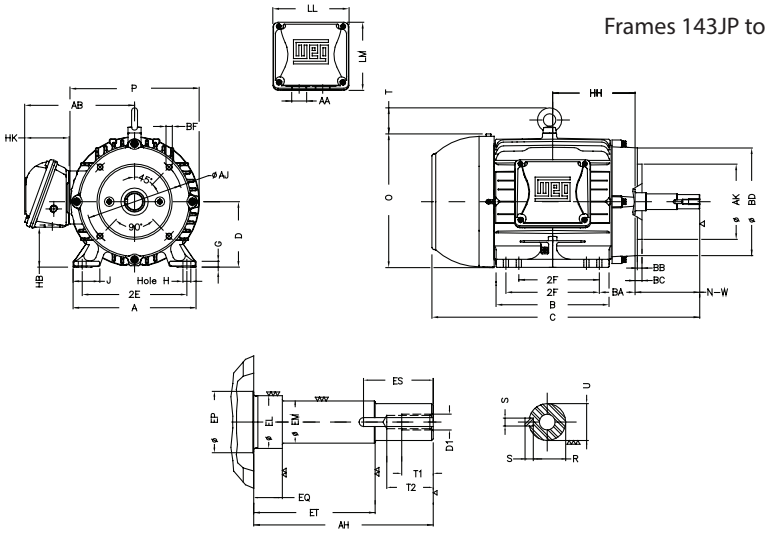

Frames 254JP to 326JP

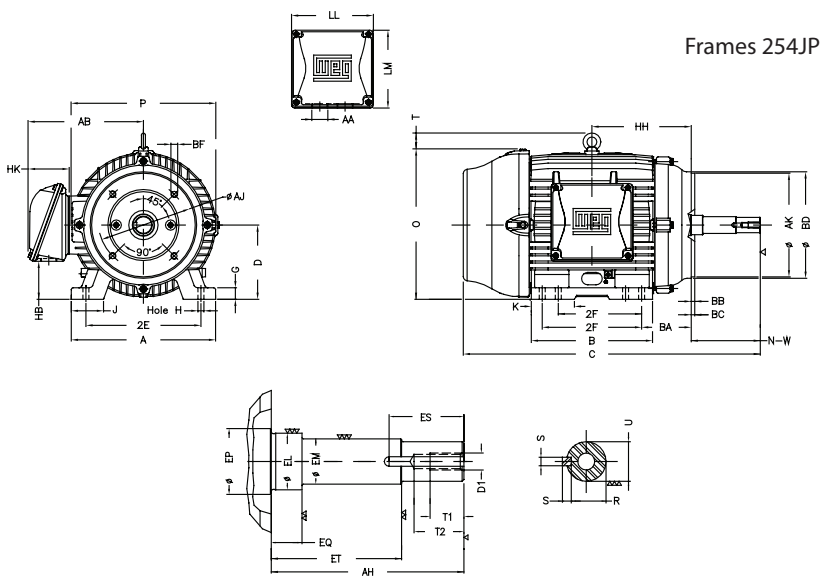

Frames 364/5JP to 404/5JP

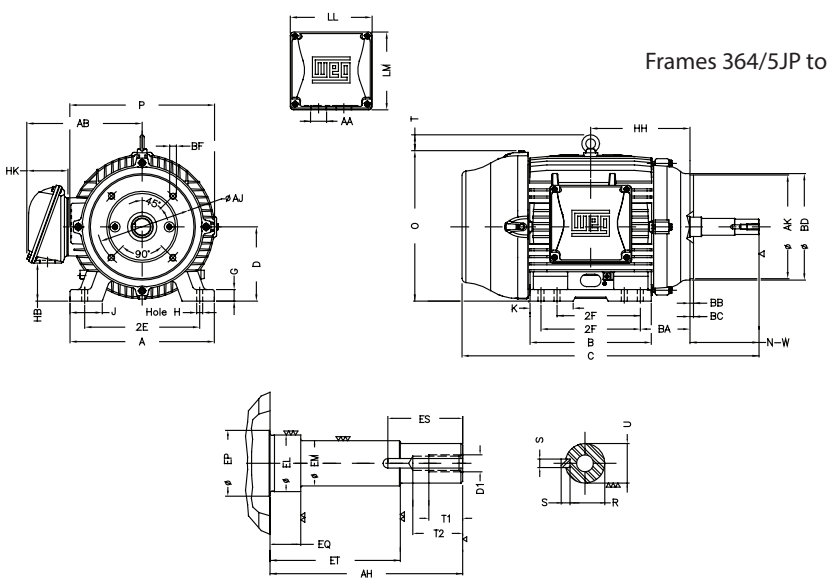

ODP – Rolled Steel JM

Frame	2E	2F	A	AA	AB	B	BA	D	G	HB	HK	Hole H	J	LL	LM	O	P	R	U
143/5JM	5.500	4.000/5.000	6.535	1.118	5.873	6.496	2.750	3.500	0.118	1.784	2.629	0.343	1.725	4.563	4.090	6.723	6.456	0.768	0.874
182/4JM	7.500	4.500/5.500	8.661		6.696	6.299	3.500	4.500	0.167	2.784		0.406	1.299			8.557	8.114	0.767	
213/5JM	8.500	5.500/7.000	9.449	1.377	7.973	7.953	4.250	5.250		2.982	3.022		1.575	5.551	5.250	10.144	9.846	0.768	
254/6JM	10.000	8.252/10.000	11.417	1.732	9.448	11.417	4.750	6.250	0.187	3.631	3.645	0.530	1.693	6.299	6.017	12.010	11.558	1.110	1.249

Frame	Flange					Shaft end										Bearings	
	AJ	AK	BB	BD	BF	AH	EL	EP	EM	EN	EQ	ES	ET	S	T1	T2	D.E.	N.D.E.
143/5JM	5.874	4.500	0.157	6.028	UNC 3/8"x16	4.267	1.156	1.179	1.000	DUNC 3/8" - 16	0.630	1.575	2.880	0.187	0.748	1.102	6206 ZZ	6203 ZZ
182/4JM						4.258	1.250	1.376									6207 ZZ	6205 ZZ
213/5JM	7.250	8.500	0.250	9.401	UNC 1/2"x13			1.769									6209 ZZ	6206 ZZ
254/6JM				11.084		5.250	1.750		1.375	DUNC 1/2" - 13		2.559	3.006	0.250	0.984	1.496	6309 Z-C3	6208 Z-C3

Frame	Output		Poles	C	FC
	HP	kW			
143/5JM	1	0.75	2	13.701	7.874
			4		
			6		
	1.5	1.1	2		
			4	14.488	8.661
182/4JM			6	15.472	7.874
143/5JM	2	1.5	2	14.094	8.268
			4	14.488	7.874
182/4JM			6	16.26	8.661
143/5JM	3	2.2	2	14.488	
182/4JM			4	16.654	9.055
213/5JM			6	17.717	10.236
182/4JM	5	3.7	2	16.260	8.661
			4	17.835	10.236
213/5JM			6	18.11	10.630
182/4JM	7.5	5.5	2	16.654	9.055
213/5JM			4	17.717	10.236
254/6JM			6	21.969	12.992
213/5JM	10	7.5	2	18.110	10.630
			4	18.898	11.417
254/6JM			6	21.969	12.992
213/5JM	15	11	2	18.898	11.417
254/6JM			4	21.969	12.992
	20	15	2		
			4		
	25	18.5	2		

Data subject to change without notice.

Frame 143

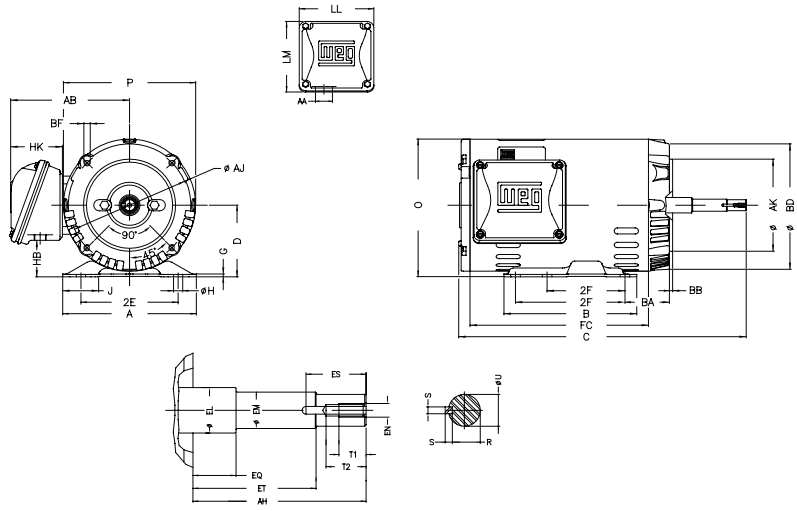

Frame 182

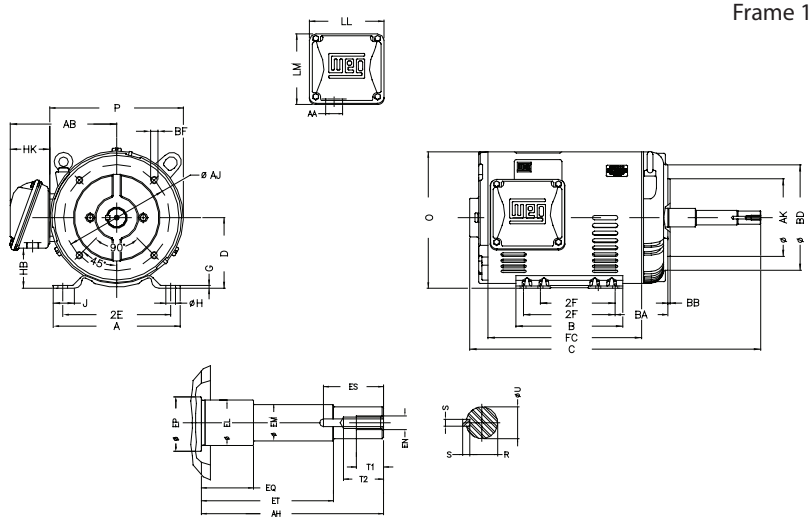

Frame 213 to 256

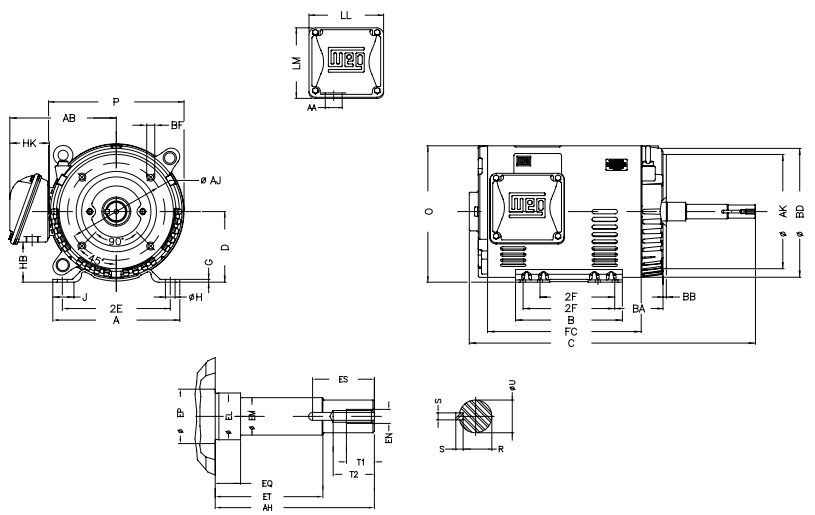

ODP – Rolled Steel JP

Frame	2E	2F	A	AA	AB	B	BA	D	G	HB	HK	Hole H	J	LL	LM	O	P
143/5JP	5.500	4.000/5.000	6.535	1.118	5.873	6.496	2.750	3.500	0.118	1.784	2.629	0.343	1.725	4.563	4.090	6.723	6.456
182/4JP	7.500	4.500/5.500	8.661		6.696	6.299	3.500	4.500	0.167	2.784		0.406	1.299			8.557	8.114
213/5JP	8.500	5.500/7.000	9.449	1.377	7.973	7.953	4.250	5.250		2.982	3.022		1.575	5.551	5.250	10.144	9.846
254/6JP	10.000	8.252/10.000	11.417	1.732	9.448	11.417	4.750	6.250	0.187	3.631	3.645	0.530	1.693	6.299	6.017	12.010	11.558

Frame	Flange					Shaft end												Bearings	
	AJ	AK	BB	BD	BF	AH	EL	EP	EM	EN	EQ	ES	ET	R	S	T1	T2	U	D.E.	N.D.E
143/5JP	5.874	4.500	0.157	6.028	UNC 3/8"x16	7.319	1.156	1.179	1.000	DUNC 3/8" - 16	1.563	1.654	5.941	0.768	0.187	0.748	1.102	0.874	6206ZZ	6203ZZ
182/4JP				8.858			1.250	1.376											6207ZZ	6205ZZ
213/5JP	7.250	8.500	0.250	9.401	UNC 1/2"x13	8.149	1.750	1.769	1.375	DUNC 1/2" - 13	2.374		5.905	1.110	0.250	0.984	1.496	1.250	6209ZZ	6206ZZ
254/6JP				11.084		8.130			1.375		2.382	2.559	5.886					1.249	6309 Z-C3	6208 Z-C3

Frame	Output		Poles	C	FC
	HP	kW			
143/5JP	1	0.75	2	16.772	7.874
			4		
			6		
	1.5	1.1	2		
			4	17.559	8.661
182/4JP			6	18.543	7.874
143/5JP	2	1.5	2	17.165	8.268
			4	17.559	7.874
182/4JP			6	19.331	8.661
143/5JP	3	2.2	2	17.559	
182/4JP			4	19.724	9.055
213/5JP			6	21.575	10.236
182/4JP	5	3.7	2	19.331	8.661
			4	20.906	10.236
213/5JP			6	21.969	10.63
182/4JP	7.5	5.5	2	19.724	9.055
213/5JP			4	21.575	10.236
254/6JP			6	24.843	12.992
213/5JP	10	7.5	2	21.969	10.63
			4	22.756	11.417
254/6JP			6	24.843	12.992
213/5JP	15	11	2	22.756	11.417
254/6JP			4	24.843	12.992
	20	15	2		
			4		
	25	18.5	2		

Data subject to change without notice.

Frame 143

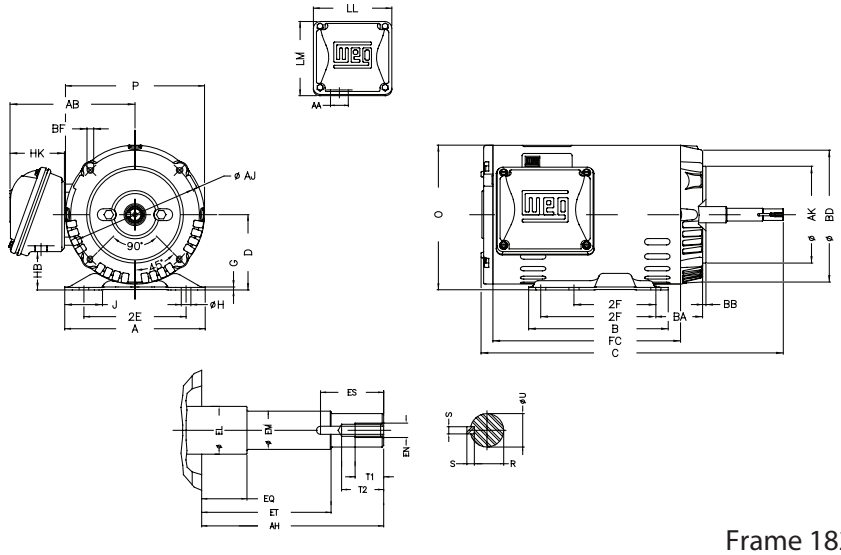

Frame 182

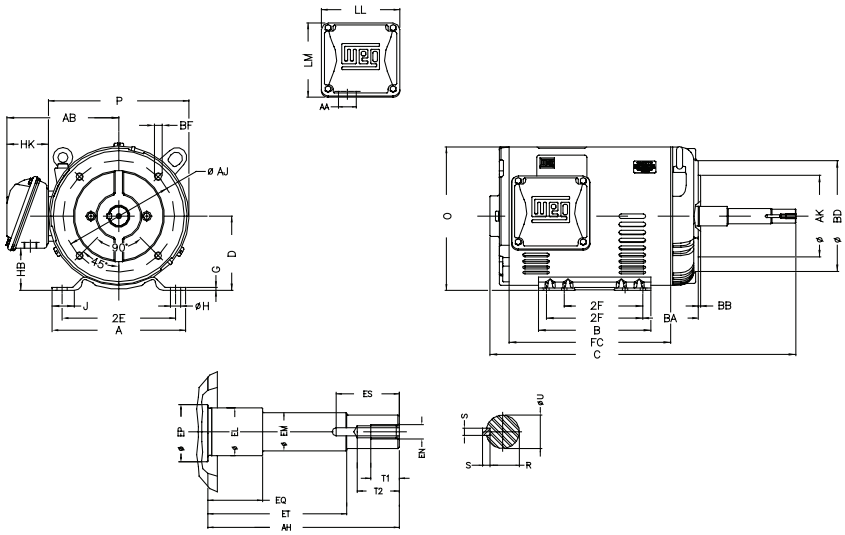

Frame 213 to 256

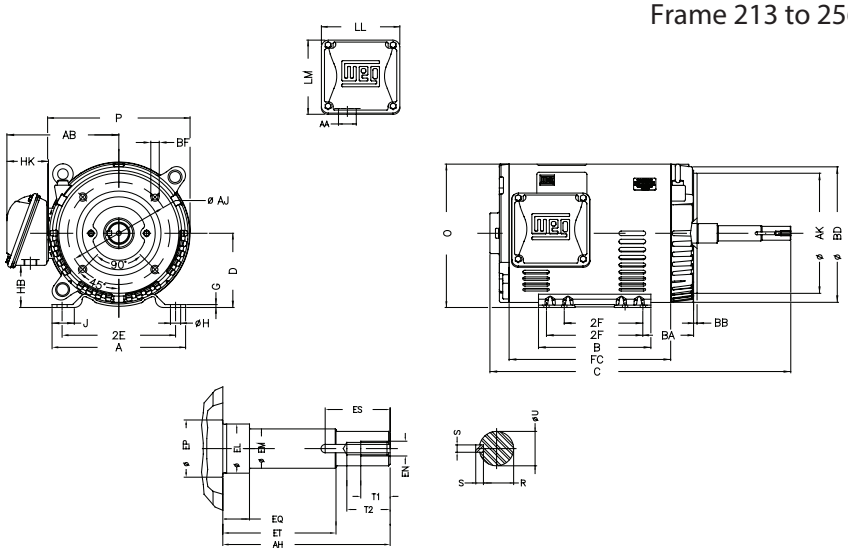

Frame	2E	2F	J	A	P	AH	K	B	BA	CH	U	d1	N-W
143T	5.500	4.000	1.496	6.457	7.047	2.125	1.654	5.157	2.250	0.708	0.875	A	2.250
145T		5.000			7.047	2.125	1.654	6.142	2.250	0.708	0.875		2.250
182T	7.500	4.500	1.890	8.661	8.740	2.625	1.969	5.945	2.750	1.220	1.125		2.750
184T		5.500		8.661	8.740	2.625	1.969	6.969	2.750	1.220	1.125		2.750
213T	8.500	5.500	2.008	9.764	10.630	3.125	2.165	7.362	3.500	1.220	1.375		3.375
215T		7.000		9.764	10.630	3.125	2.165	8.858	3.500	1.220	1.375		3.375
254T	10.000	8.252	2.520	12.126	12.283	3.750	2.559	10.000	4.250	1.850	1.625		4.000
256T		10.000		12.126	12.283	3.750	2.559	11.732	4.250	1.850	1.625		4.000
284T	11.000	9.500	3.150	13.780	14.094	4.375	2.953	11.575	4.750	2.244	1.875		4.622
286T		11.000		13.780	14.094	4.375	2.953	13.071	4.750	2.244	1.875		4.622

Frame	ES	S	R	D	G	O	Hole H	C	DE BRG	NDE BRG
143T	1.575	0.187	0.765	3.500	0.547	7.000	0.344	15.222	6205 ZZ	6204 ZZ
145T	1.575	0.187	0.765	3.500	0.547	7.000	0.344	16.166	6205 ZZ	6204 ZZ
182T	1.969	0.250	0.984	4.500	0.720	9.343	0.406	18.246	6307 ZZ	6206 ZZ
184T	1.969	0.250	0.984	4.500	0.720	9.343	0.406	19.246	6307 ZZ	6206 ZZ
213T	2.480	0.313	1.203	5.250	0.827	10.841	0.406	22.646	6308 ZZ	6207 ZZ
215T	2.480	0.313	1.203	5.250	0.827	10.841	0.406	24.142	6308 ZZ	6207 ZZ
254T	2.756	0.375	1.406	6.250	0.817	12.431	0.531	28.095	6309 C3	6209 Z-C3
256T	2.756	0.375	1.406	6.250	0.817	12.431	0.531	29.827	6309 C3	6209 Z-C3
284T	3.149	0.500	1.594	7.000	1.016	14.067	0.531	32.648	6311 C3	6211 Z-C3
286T	3.149	0.500	1.594	7.000	1.016	14.067	0.531	34.144	6311 C3	6211 Z-C3

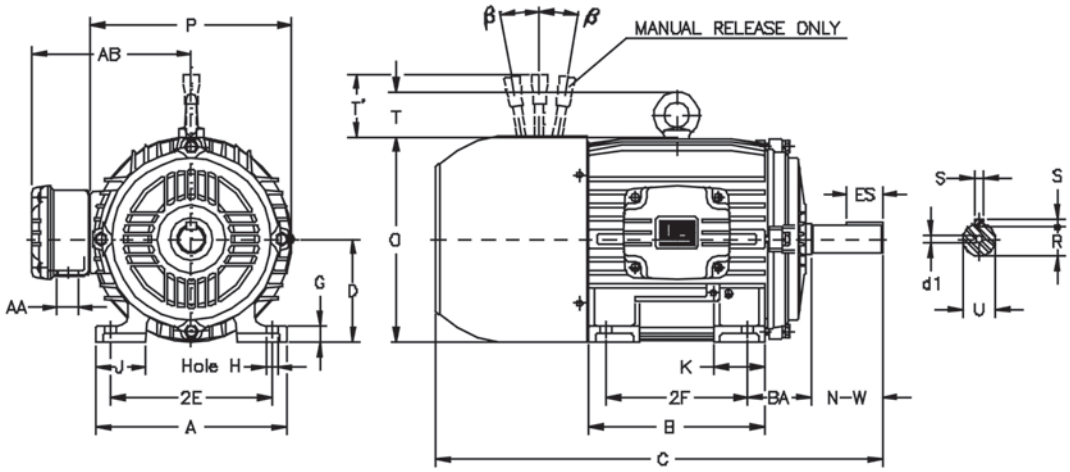

Frame	2E	2F	A	AA	AB	B	BA	D	G	HB	HK	Hole H	H1	J	LL	LM	P	T
56	4.874	3.000	6.535	0.881	5.873	4.016	2.750	3.500	0.118	1.784	2.629	0.343	1.220	1.734	4.563	4.090	7.638	0.604
56H		3.000/5.000				6.496								1.593				

Frame	Shaft end						Bearings	
	d1	ES	N-W	R	S	U	D.E.	N.D.E.
56	A 3.15	1.417	1.874	0.517	0.187	0.6250	6203 ZZ	6202 ZZ
56H							6204 ZZ*	

Frame	Output		Poles	C	FC
	HP	kW			
56	0.25	0.18	2	11.142	5.512
			4		
			6	11.535	5.906
	0.33	0.25	2	11.142	5.512
			4	11.535	5.906
			6	11.929	6.299
	0.5	0.37	2	11.535	5.906
			4		
			6	12.323	6.693
	0.75	0.55	2	11.535	5.906
			4	11.929	6.299
56H			6	12.717	7.087
56	1	0.75	2	11.929	6.299
			4	12.323	6.693
56H			6	13.504	7.874
56	1.5	1.1	2	12.323	6.693
56H			4	13.11	7.48
	2	1.5	2		
			4	13.504	7.874
	3	2.2	2	13.898	8.268

Frame 56

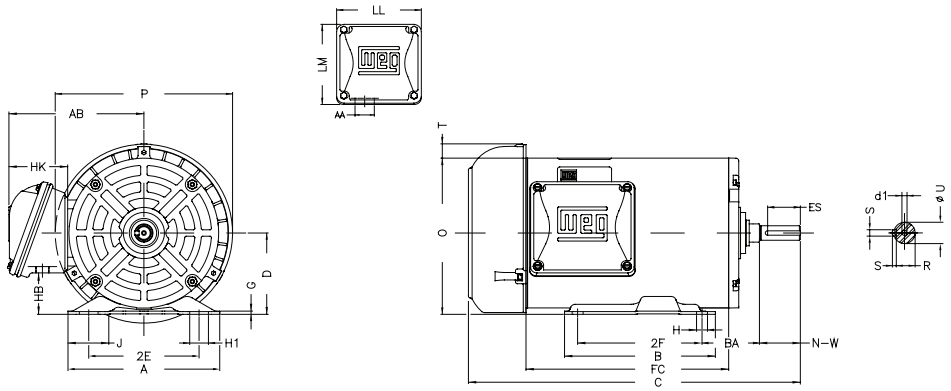

Frame 56H

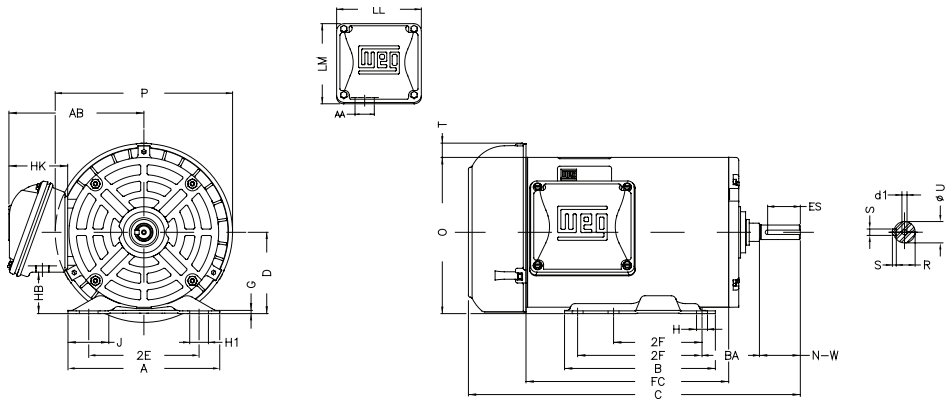

TEFC – Rolled Steel Standard Efficiency continued

Frame	BA	Flange					
		AJ	AK	BB	BD	BF	AH
56C	2.750	5.874	4.500	0.157	6.028	UNC 3/8"x16-2B	2.062
56HC							

Frame 56

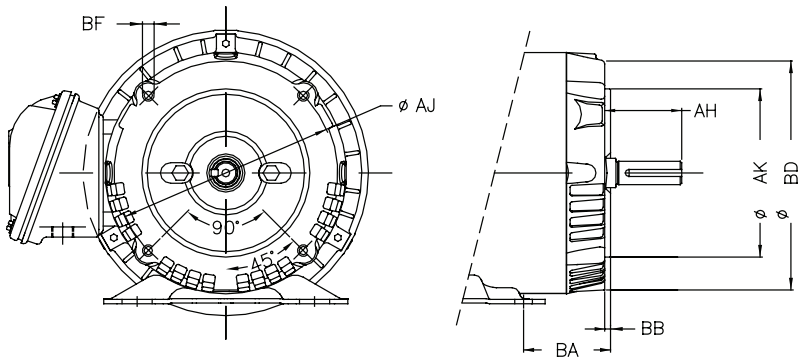

Data subject to change without notice.

Frame	2E	2F	A	AA	AB	B	BA	D	G	HB	HK	Hole H	H1	J	LL	LM	O	P	T
56C	4.874	3.000	6.535	0.881	5.873	4.016	2.750	3.500	0.118	1.784	2.629	0.343	1.220	1.734	4.563	4.090	6.723	7.638	0.604
56HC		3.000/5.000				6.496								1.593					

Frame	Flange					Shaft end							Bearings	
	AJ	AK	BB	BD	BF	AH	d1	ES	N-W	R	S	U	D.E.	N.D.E.
56C	5.874	4.500	0.157	6.028	UNC 3/8"x16-2B	2.062	A 3.15	1.417	1.874	0.517	0.187	0.625	6203 ZZ	6202 ZZ
56HC														

Frame	Output		Poles	C	FC
	HP	kW			
56C	0.25	0.18	2	11.142	5.512
	0.33	0.25	2		
	0.5	0.37	2	11.535	5.906
	0.75	0.55	2		
	1	0.75	2	11.929	6.299
	1.5	1.1	2	12.323	6.693
56HC	2	1.5	2	13.11	7.48
	3	2.2	2	13.898	8.268

Frame 56

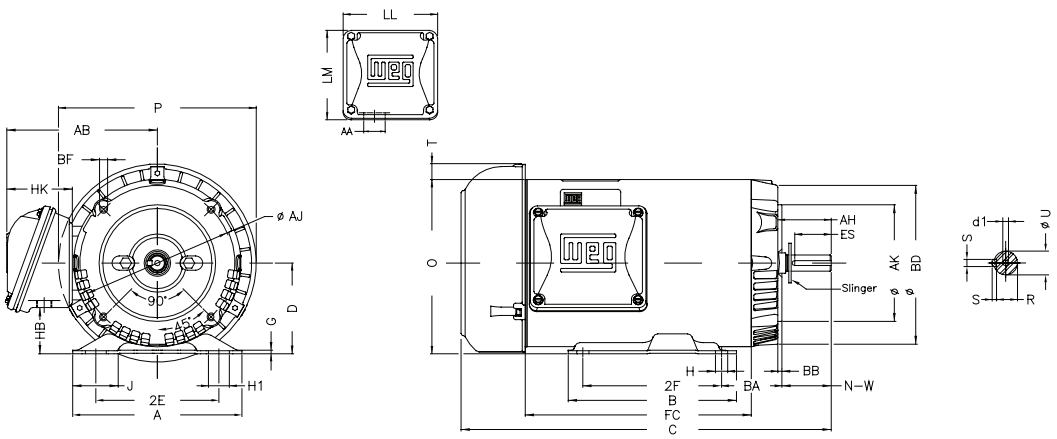

Frame 56H

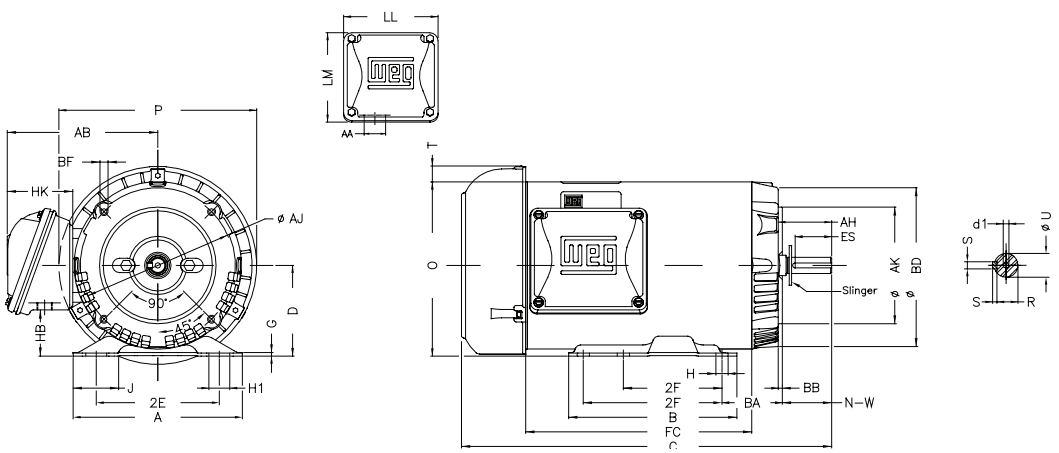

TEFC – Rolled Steel Standard Efficiency Jet Pump – Type J

Frame	2E	2F	A	AA	AB	B	BA	G	HB	HK	Hole H	H1	J	LL	LL	O	P	T
56J	4.874	3.000	6.535	0.881	5.873	4.016	2.559	0.118	1.784	2.629	0.343	1.220	1.734	4.563	4.090	6.723	6456	0.604
56HJ		3.000/5.000				6.496							1.593					

Frame	Flange					Shaft end											Bearings	
	AJ	AK	BB	BD	BF	AH	DA	EA	EL	EN	EP	ET	FA	GF	N-W	T1	T2	D.E.	N.D.E.
56J	5.874	4.500	0.157	6.028	UNC 3/8"x16-2B	2.562	0.137	0.039	0.625	D UNF 1/4"-28	0.665	1.874	0.688	0.015	2.562	0.472	0.590	6203 ZZ	6202 ZZ
56HJ																			

Frame	Output		Poles	C	FC
	HP	kW			
56J	0.25	0.18	2	11.653	5.512
	0.33	0.25			
	0.5	0.37		12.046	5.906
	0.75	0.55			
	1	0.75		12.44	6.299
	1.5	1.1		12.834	6.693
56HJ	2	1.5		13.621	7.48
	3	2.2		14.409	8.268

Frame 56

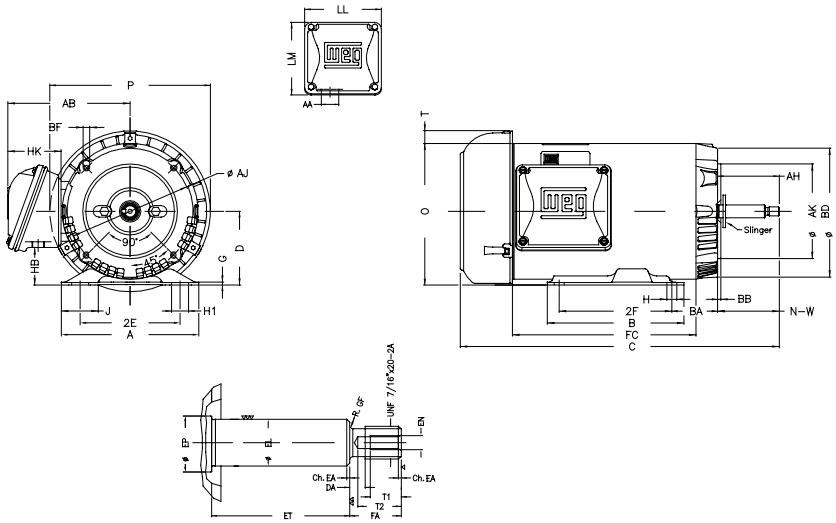

Frame 56H

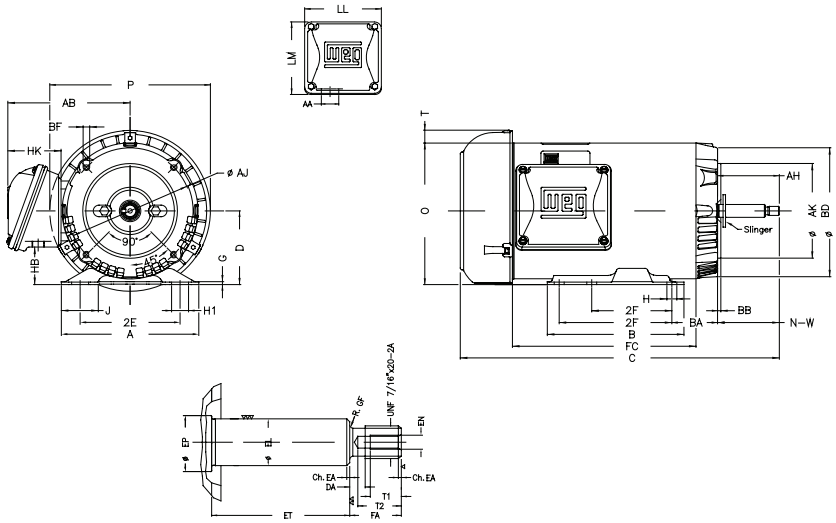

Data subject to change without notice.

ODP – Rolled Steel Standard Efficiency Jet Pump – Type C

Frame	2E	2F	A	AB	B	BA	D	G	Hole H	H1	J	O	P	S1
56C	4.874	3.000	6.535	3.323	4.016	2.750	3.500	0.118	0.343	1.220	1.734	6.723	6.456	NPT 1/2"
56HC		3.000/5.000			6.496						1.593			

Frame	Flange					Shaft end							Bearings	
	AJ	AK	BB	BD	BF	AH	d1	ES	N-W	R	S	U	D.E.	N.D.E.
56C	5.874	4.500	0.157	6.028	UNC 3/8"x16-2B	2.062	A 3.15	1.417	1.874	0.517	0.187	0.625	6203 ZZ	6202 ZZ
56HC														

Frame	Output		Poles	C	FC
	HP	kW			
56C	0.33	0.25	2	10.315	6.299
	0.5	0.37			
	0.75	0.55		10.709	6.693
	1	0.75			
	1.5	1.1		11.102	7.087
56HC	2	1.5		11.496	7.48
	3	2.2		12.283	8.268

Frame 56

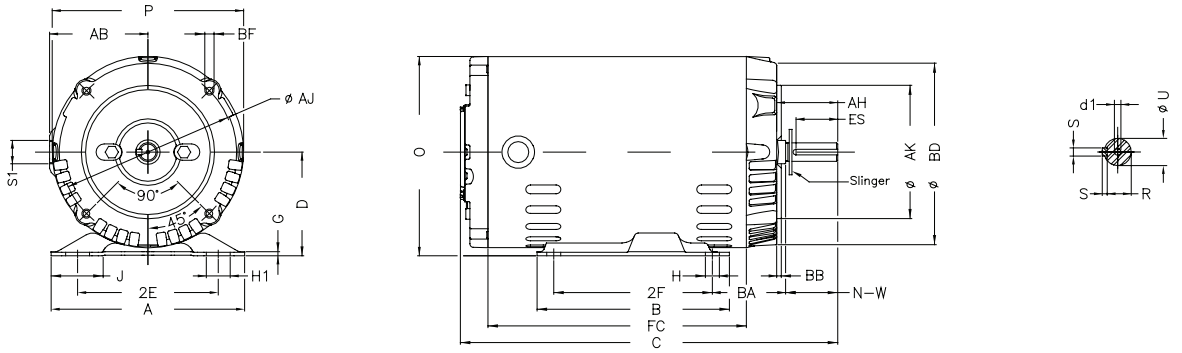

Frame 56H

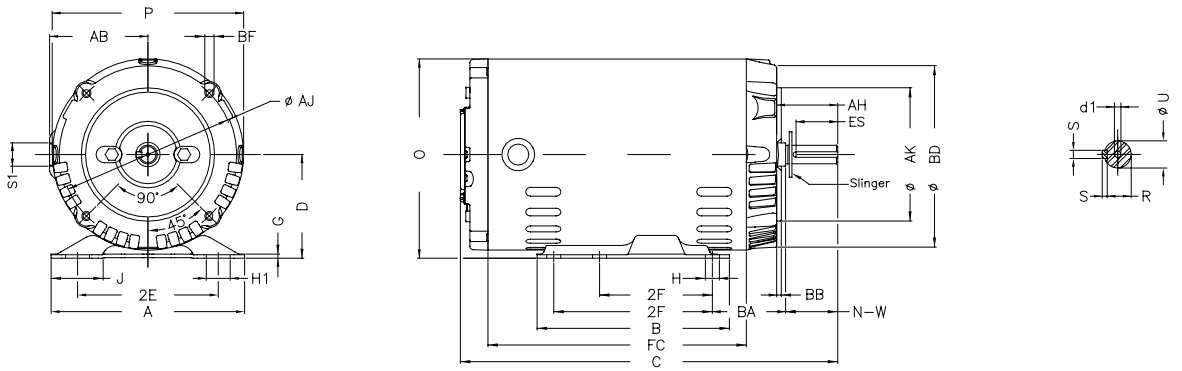

ODP – Rolled Steel Standard Efficiency Jet Pump – Type J

Frame	2E	2F	A	AB	B	BA	D	DA?	G	Hole H	H1	J	O	P	S1
56J	4.874	3.000	6.535	3.323	4.016	2.559	3.500	0.137	0.118	0.343	1.220	1.734	6.723	6.456	NPT 1/2"
56HJ		3.000/5.000			6.496							1.593			

Frame	Flange					Shaft end										Bearings	
	AJ	AK	BB	BD	BF	AH	EA?	EL	EN	EP	ET	FA?	GF?	N-W	T1	T2	D.E.	N.D.E.
56J	5.874	4.500	0.157	6.028	UNC 3/8"x16-2B	2.562	0.039	0.625	D UNF 1/4"-28	0.665	1.874	0.688	0.015	2.562	0.472	0.590	6203ZZ	6202 ZZ
56HJ																		

Frame	Output		Poles	C	FC
	HP	kW			
56J	0.33	0.25	2	10.826	6.299
	0.5	0.37			
	0.75	0.55		11.22	6.693
	1	0.75		11.22	
	1.5	1.1		11.613	7.087
56HJ	2	1.5		12.007	7.48
	3	2.2		12.794	8.268

Frame 56

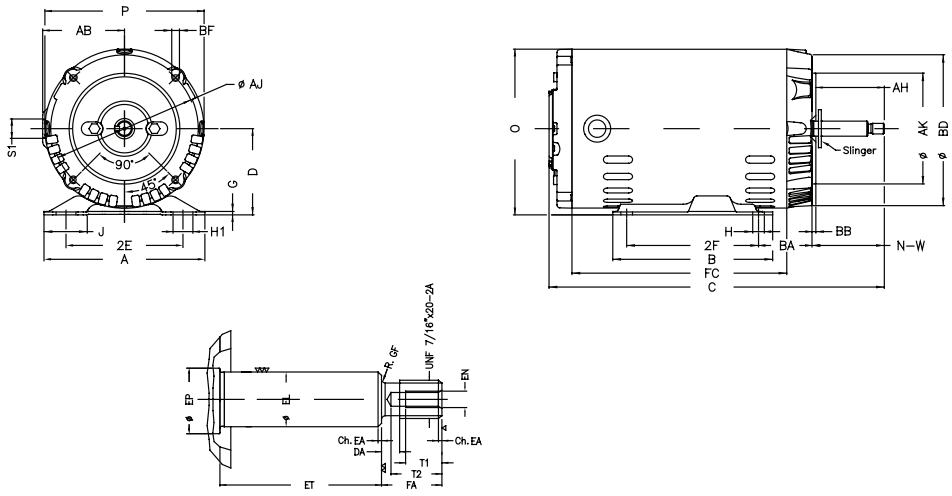

Frame 56H

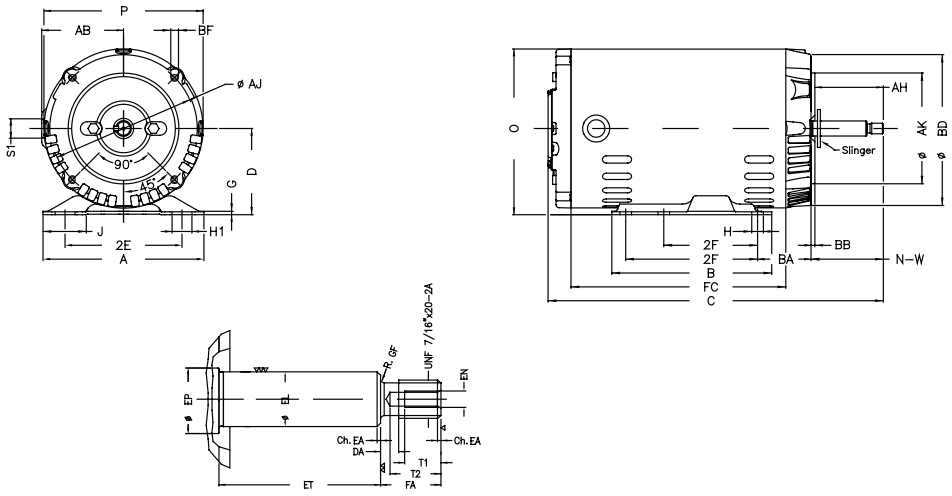

Data subject to change without notice.

Frame	AA	AB	C	CH	P	Flange					Shaft end					
						AJ	AK	BB	BD	BF	AH	ES	EU	R	S	U
143HP	NPT 3/4″	6.102	13.421	0.708	7.047	9.125	8.250	0.196	10.000	0.433	2.750	1.250	0.687	0.765	0.187	0.875
145HP			14.397													
182HP	NPT 1″	7.086	15.504	1.220	8.740								0.875	0.984	0.250	1.125
184HP			16.504													
213HP		8.149	18.630		10.630											
215HP			20.126													
254HP	NPT 1 1/2″	10.079	23.723	1.850	12.283											
256HP			25.455													
284HP		10.866	26.350	2.244	14.094											
284HPH			28.100			14.750	13.500	0.250	16.500	0.687	4.500	3.150	1.250	1.415	0.375	1.625
286HP			27.845			9.125	8.250	0.196	10.000	0.433	2.750	1.250	0.875	0.984	0.250	1.125
286HPH			29.595			14.750	13.500	0.250	16.500	0.687	4.500	3.150	1.250	1.415	0.375	1.625
324HP	NPT 2″	11.496	30.403	2.634	15.591											
326HP			31.897													
364HP	NPT 3″	16.380	33.684	3.110	18.740											
365HP																
364/5HP																
404HP			36.674													
405HP																
405HPH													1.750	1.844	0.500	2.125
404/5HP													1.250	1.415	0.375	1.625
405HPH																
404/5HPH													1.750	1.844	0.500	2.125
444HP	2xNPT 3″	19.213	40.012	3.504	23.622											
445HP																
444/5HP																

* Not applicable.

Frames 143HP to 444/5HP

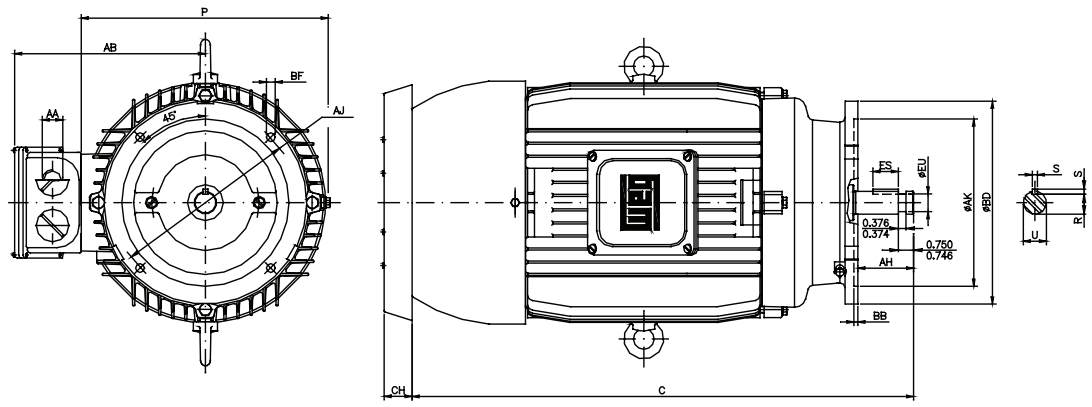

TEFC – Cooling Tower Motors – NEMA Premium

Frame	2E	2F	A	AA	AB	B	BA	C	D	EV	G	HB	HD	HF	HG	HH
143T	5.500	4.000	6.457	NPT 3/4"	6.260	5.157	2.250	12.346	3.500	*	0.354	1.787	-	3.500	*	4.250
143/5T		4.000/5.000				6.142		13.346								4.750
145T		5.000			7.565											
182T	7.500	4.500	8.661	NPT 1"		5.945	2.750	14.860	4.500			2.236	11.115	4.500		5.000
182/4T		4.500/5.500			8.667	6.969		15.860								5.500
213T	8.500	5.500	9.764			7.362	3.500	18.021	5.250		0.669	2.985	12.613	5.250		6.250
213/5T		5.500/7.000				8.858		19.517								7.000
254T	10.000	8.252	12.126	NPT 1/2"	10.483	10.000	4.250	23.213	6.250		0.827	3.061	14.685	6.565		8.376
256T		10.000				11.732		24.945								9.250
254/6T		8.252/10.000														
284TS	11.000	9.500	13.780		11.073	11.575	4.750	25.061	7.000		1.023	3.535	16.154	7.000		9.500
284T								26.433								
284/6TS		9.500/11.000				13.071		26.557								10.250
284/6T								27.929								
324TS	12.500	10.500	15.157	NPT 2"	12.575		5.250	28.120	8.000		1.300	4.811	18.394	8.708		10.500
324T								29.620								
326TS		12.000				14.567		29.616								11.250
326T								31.116								
324/6T		10.500/12.000														
364/5TS	14.016	11.260/12.244	17.165	NPT 3"	16.016	15.760	5.875	32.276	9.000	1.654	1.480	4.251	21.535	*		12.362
364/5T								34.251								
404/5TS	15.984	12.244/13.740	19.921			18.386	6.625	36.732	10.000	2.323	1.811	5.252	23.110			14.213
404/5T								39.730								
444/5TS	18.000	14.500/16.500	21.929	2xNPT 3"	18.570	20.315	7.500	41.200	11.000	1.929	1.630	5.687	27.362			15.748
444/5T								44.950								
445/7TS		16.500/20.000			20.559	23.897		44.951			1.654	12.488	30.173	20.724	26.830	11.803
445/7T								48.701								
447/9TS		20.000/25.000				31.535		52.588			1.630					
447/9T								56.338								
L447/9TS					23.720			53.431		2.638		11.535	28.590	20.551	28.185	11.500
L447/9T								57.181								
504/5TS	20.000	16.000/18.000	24.724		20.599	24.449	8.500	48.215	12.500	2.756	1.870	15.275	30.307	24.291	29.502	10.394
504/5T								54.095								
586/7TS	23.000	22.000/25.000	29.528		23.189	29.921	10.000	55.027	14.500	2.559	2.492	18.575	34.537	26.732	35.236	13.386
586/7T								61.902								
588/9TS		28.000/32.000		2XNPT 4"	27.440	37.980		62.506		2.756		16.338	35.346	26.182		
588/9T								69.381								

* Not applicable.

Data subject to change without notice.

Frame	HK	Hole H	J	K	LL	LM	O	P	Shaft end						Bearings	
									d1	ES	N-W	R	S	U	D.E.	N.D.E.
143T	2.638	0.344	1.437	*	4.528	4.094	7.122	6.850	A 4	1.575	2.250	0.765	0.187	0.875	6205 2RS	6204 2RS
143/5T																
145T																
182T	3.150	0.406	1.614		5.512	5.236	9.343	8.504		1.969	2.750	0.984	0.250	1.125	6207 2RS	6206 2RS
182/4T																
213T			1.772	2.165			10.841	10.669		2.480	3.375	1.203	0.313	1.375	6308 2RS	6207 2RS
213/5T																
254T	3.976	0.531	2.539	2.559	7.815	7.480	12.598	12.480		2.756	4.000	1.406	0.375	1.625	6309 2RS-C3	6209 2RS-C3
256T																
254/6T																
284TS			3.110	2.874			14.067	13.780		2.480	3.250				6311 2RS-C3	6211 2RS-C3
284T										3.149	4.622	1.594	0.500	1.875		
284/6TS										2.480	3.250	1.406	0.375	1.625		
284/6T										3.149	4.622	1.594	0.500	1.875		
324TS	4.705	0.657	3.189	3.189	9.055	8.661	15.953	14.961		2.756	3.750				6312 2RS-C3	6212 2RS-C3
324T										3.937	5.250	1.844		2.125		
326TS										2.756	3.750	1.594		1.875		
326T										3.937	5.250	1.844		2.125		
324/6T																
364/5TS	6.024	0.660	3.150	4.921	10.591	11.267	17.957	17.914	DUNC3/4"-10	1.968	3.748	1.591		1.875	6314 C3	6314 C3
364/5T										4.330	5.874	2.019	0.625	2.375	6314 2RS-C3	6314 2RS-C3
404/5TS		0.810	3.937	5.669			19.566	19.134		2.756	4.250	1.842	0.500	2.125	6314 C3	6314 C3
404/5T										5.512	7.250	2.449	0.750	2.875	6316 2RS-C3	6314 2RS-C3
444/5TS	5.970			5.866	12.362	12.283	22.795	23.583		3.000	4.750	2.021	0.625	2.375	6314 C3	6314 C3
444/5T										7.087	8.500	2.880	0.875	3.375	6319 C3	6316 C3
445/7TS	6.929			7.244	14.921	15.039				3.000	4.750	2.021	0.625	2.375	6314 C3	6314 C3
445/7T										7.087	8.500	2.880	0.875	3.375	6319 C3	6316 C3
447/9TS				11.770						3.000	4.750	2.021	0.625	2.375	6314 C3	6314 C3
447/9T										7.087	8.500	2.880	0.875	3.375	6322 C3	6319 C3
L447/9TS	8.661			8.780	15.906	17.165	23.874	25.866		3.000	4.750	2.021	0.625	2.375	6314 C3	6314 C3
L447/9T										7.087	8.500	2.880	0.875	3.375	6322 C3	6319 C3
504/5TS	6.929	1.250	4.724	7.228	14.921	15.039	25.425			3.000	4.750	2.021	0.625	2.375	6314 C3	6314 C3
504/5T										8.661	10.630	3.134	0.875	3.625	6319 C3	6316 C3
586/7TS	8.661	1.181	5.512	9.055	15.906	17.165	28.985	28.977		3.000	4.750	2.021	0.625	2.375	6314 C3	6314 C3
586/7T									DUNC 7/8"-9	8.661	11.625	3.312	1.000	3.875	6322 C3	6319 C3
588/9TS	11.417			13.030	18.110	21.417			DUNC3/4"-10	3.000	4.750	2.021	0.625	2.375	6314 C3	6314 C3
588/9T									DUNC 7/8"-9	8.661	11.625	3.312	1.000	3.875	6322 C3	6319 C3

* Not applicable.

TEFC – Cooling Tower Motors – NEMA Premium continued

See next page for additional outline drawings

Frames 143 to 213/5

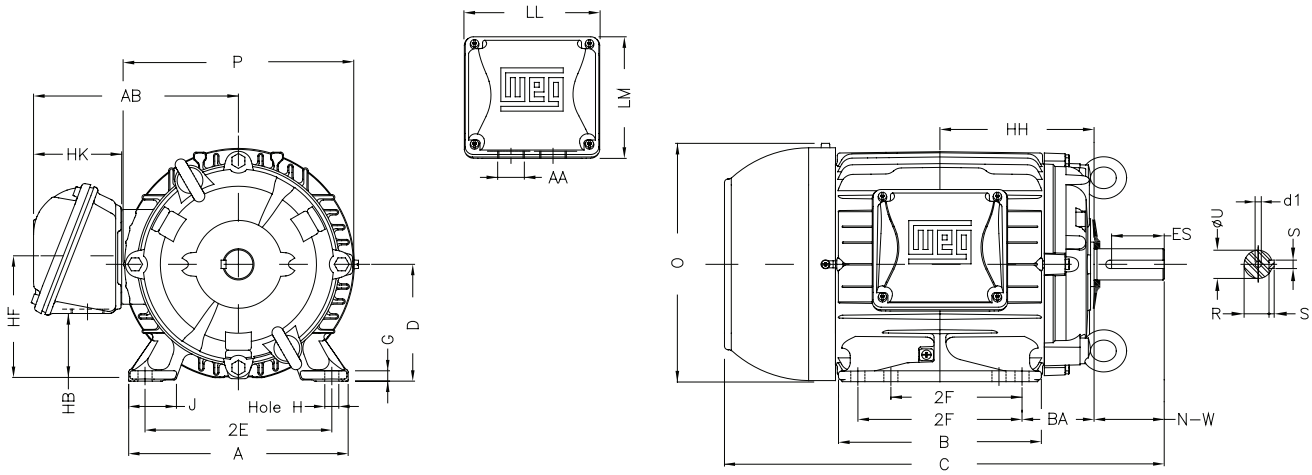

Frames 182 to 213/5

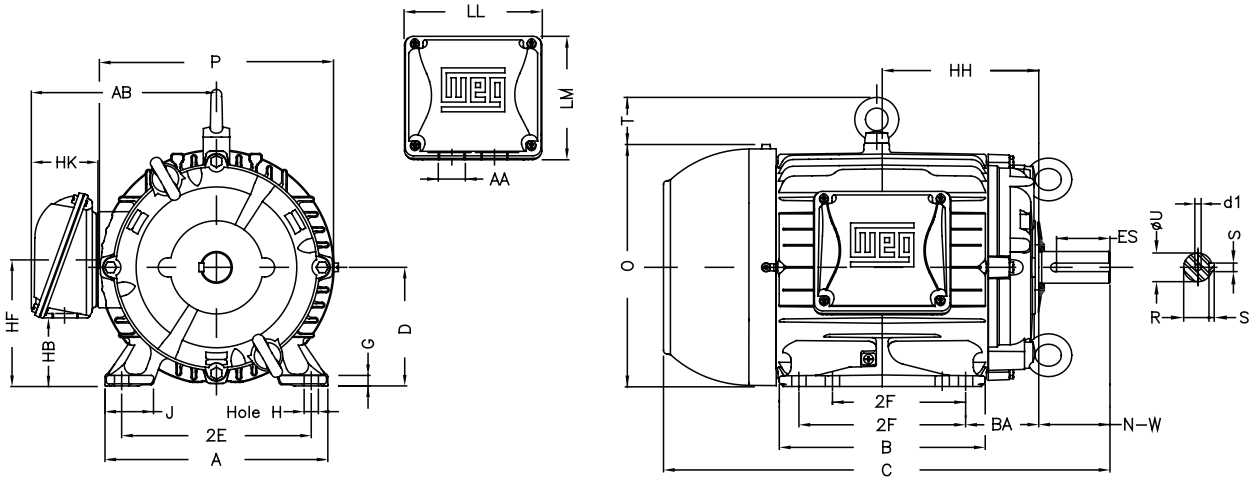

Data subject to change without notice.

Frames 254 to 326

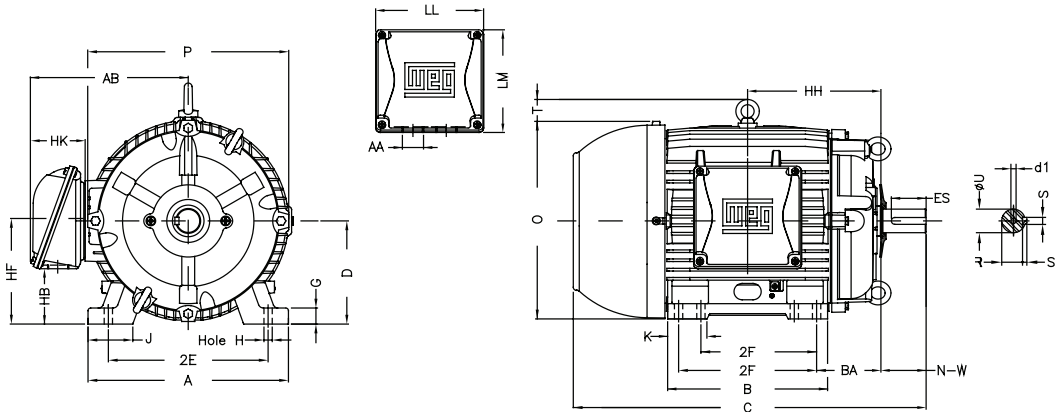

Frames 364/5 to 445/7

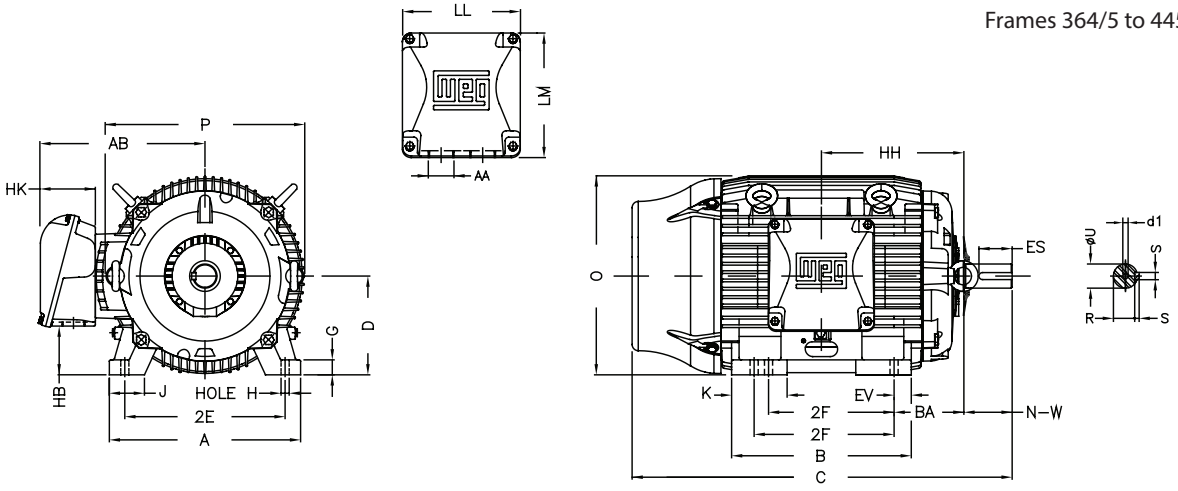

Frames 447/9 to 588/9

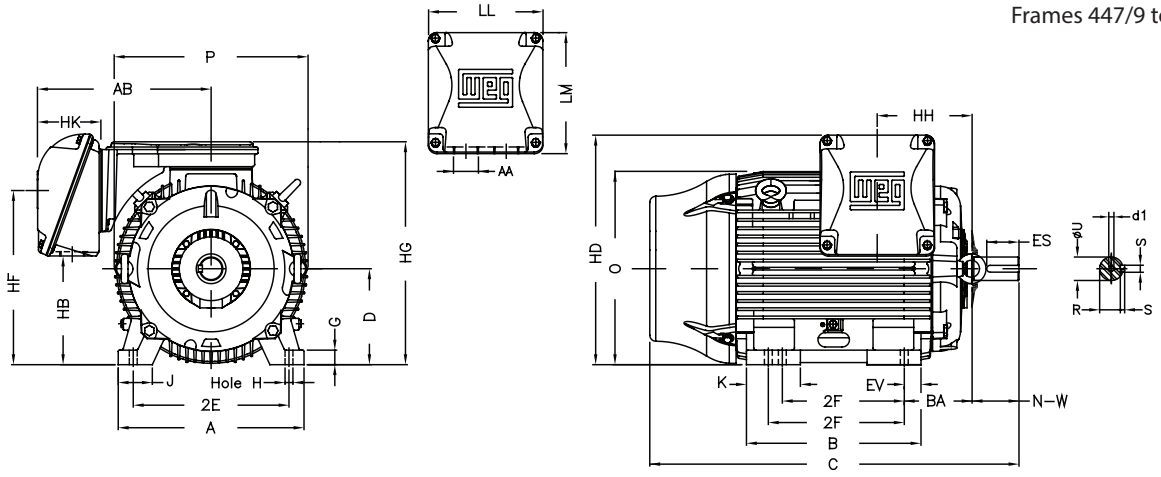

TEAO – Cooling Tower Motors – NEMA Premium

Frame	2E	2F	A	AA	AB	B	BA	C	D	EV	G	HB	HD	HF	HG	HH	HK
143T	5.500	4.000	6.457	NPT 3/4"	6.260	5.157	2.250	12.353	3.500	*	0.354	1.787	-	3.500	*	4.250	2.638
143/5T		4.000/5.000				6.142		13.338								4.750	
145T		5.000						13.338									
182T	7.500	4.500	8.661	NPT 1"	7.565	5.945	2.750	14.298	4.500		0.394	2.236	11.115	4.500		5.000	3.150
182/4T		4.500/5.500				6.969		15.298								5.500	
213T	8.500	5.500	9.764		8.667	7.362	3.500	17.239	5.250		0.669	2.985	12.613	5.250		6.250	
213/5T		5.500/7.000				8.858		18.739								7.000	
254T	10.000	8.252	12.126	NPT 1/2"	10.483	10.000	4.250	21.594	6.250		0.827	3.061	14.685	6.565		8.376	3.976
256T		10.000				11.732		23.343								9.250	
254/6T		8.252/10.000						23.343									
284TS	11.000	9.500	13.780		11.073	11.575	4.750	24.043	7.000		1.023	3.535	16.154	7.000		9.500	
284T								25.418									
284/6TS		9.500/11.000				13.071		25.543								10.250	
284/6T								26.918									
324TS	12.500	10.500	15.157	NPT 2"	12.575		5.250	27.075	8.000		1.300	4.811	18.394	8.708		10.500	4.705
324T								28.575									
326TS		12.000				14.567		28.571								11.250	
326T								30.071									
324/6T		10.500/12.000						30.071									
364/5TS	14.016	11.260/12.244	17.165	NPT 3"	16.016	15.760	5.875	30.319	9.000	1.654	1.480	4.251	21.535	*		12.362	6.024
364/5T								29.390									
404/5TS	15.984	12.244/13.740	19.921			18.386	6.625	33.415	10.000	2.323	1.811	5.252	23.110			14.213	
404/5T								36.415									
444/5TS	18.000	14.500/16.500	21.929	2xNPT 3"	18.570	20.315	7.500	36.128	11.000	1.929	1.630	5.687	27.362			15.748	5.970
444/5T								39.878									
445/7TS		16.500/20.000			20.559	23.897		39.592			1.654	12.488	30.173	20.724	26.830	11.803	6.929
445/7T								43.382									
447/9TS		20.000/25.000				31.535		47.230			1.630						
447/9T								51.137									
L447/9TS					23.720			48.073		2.638	1.630	11.535	28.590	20.551	28.185	11.500	8.661
L447/9T								51.980									
504/5TS	20.000	16.000/18.000	24.724		20.599	24.449	8.500	40.045	12.500	2.756	1.870	15.275	30.307	24.291	29.502	10.394	6.929
504/5T								45.965									
586/7TS	23.000	22.000/25.000	29.528		23.189	29.921	10.000	47.722	14.500	2.559	2.492	18.575	34.537	26.732	35.236	13.386	8.661
586/7T								55.247									
588/9TS		28.000/32.000		2XNPT 4"	27.440	37.980		55.201		2.756		16.338	35.346	26.182			11.417
588/9T								62.726									

* Not applicable.

Data subject to change without notice.

Frame	HK	Hole H	J	K	LL	LM	O	P	Shaft end						Bearings	
									d1	ES	N-W	R	S	U	D.E.	N.D.E.
143T	2.638	0.344	1.437	*	4.528	4.094	7.122	6.850	A 4	1.575	2.250	0.765	0.187	0.875	6205 2RS	6204 2RS
143/5T																
145T																
182T	3.150	0.406	1.614		5.512	5.236	9.343	8.504		1.969	2.750	0.984	0.250	1.125	6207 2RS	6206 2RS
182/4T																
213T			1.772	2.165			10.841	10.669		2.480	3.375	1.203	0.313	1.375	6308 2RS	6207 2RS
213/5T																
254T	3.976	0.531	2.539	2.559	7.815	7.480	12.598	12.480		2.756	4.000	1.406	0.375	1.625	6309 2RS-C3	6209 2RS-C3
256T																
254/6T																
284TS			3.110	2.874			14.067	13.780		2.480	3.250				6311 2RS-C3	6211 2RS-C3
284T										3.149	4.622	1.594	0.500	1.875		
284/6TS										2.480	3.250	1.406	0.375	1.625		
284/6T										3.149	4.622	1.594	0.500	1.875		
324TS	4.705	0.657	3.189	3.189	9.055	8.661	15.953	14.961		2.756	3.750	1.594			6312 2RS-C3	6212 2RS-C3
324T										3.937	5.250	1.844		2.125		
326TS										2.756	3.750	1.594		1.875		
326T										3.937	5.250	1.844		2.125		
324/6T											5.250					
364/5TS	6.024	0.660	3.150	4.921	10.591	11.267	17.957	17.914	DUNC3/4"-10	1.968	3.748	1.591	0.500	1.875	6314 C3	6314 C3
364/5T										4.330	5.874	2.019	0.625	2.375	6314 2RS-C3	6314 2RS-C3
404/5TS		0.810	3.937	5.669			19.566	19.134		2.756	4.250	1.842	0.500	2.125	6314 C3	6314 C3
404/5T										5.512	7.250	2.449	0.750	2.875	6316 2RS-C3	6314 2RS-C3
444/5TS	5.970			5.866	12.362	12.283	22.795	23.583		3.000	4.750	2.021	0.625	2.375	6314 C3	6314 C3
444/5T										7.087	8.500	2.880	0.875	3.375	6319 C3	6316 C3
445/7TS	6.929			7.244	14.921	15.039				3.000	4.750	2.021	0.625	2.375	6314 C3	6314 C3
445/7T										7.087	8.500	2.880	0.875	3.375	6319 C3	6316 C3
447/9TS				11.77						3.000	4.750	2.021	0.625	2.375	6314 C3	6314 C3
447/9T										7.087	8.500	2.880	0.875	3.375	6322 C3	6319 C3
L447/9TS	8.661			8.780	15.906	17.165	23.874	25.866		3.000	4.750	2.021	0.625	2.375	6314 C3	6314 C3
L447/9T										7.087	8.500	2.880	0.875	3.375	6322 C3	6319 C3
504/5TS	6.929	1.250	4.724	7.228	14.921	15.039	25.425			3.000	4.750	2.021	0.625	2.375	6314 C3	6314 C3
504/5T										8.661	10.630	3.134	0.875	3.625	6319 C3	6316 C3
586/7TS	8.661	1.181	5.512	9.055	15.906	17.165	28.985	28.977		3.000	4.750	2.021	0.625	2.375	6314 C3	6314 C3
586/7T									DUNC 7/8"-9	8.661	11.625	3.312	1.000	3.875	6322 C3	6319 C3
588/9TS	11.417			13.030	18.110	21.417			DUNC3/4"-10	3.000	4.750	2.021	0.625	2.375	6314 C3	6314 C3
588/9T									DUNC 7/8"-9	8.661	11.625	3.312	1.000	3.875	6322 C3	6319 C3

* Not applicable.

TEAO – Cooling Tower Motors – NEMA Premium continued

Frame 143 to 145

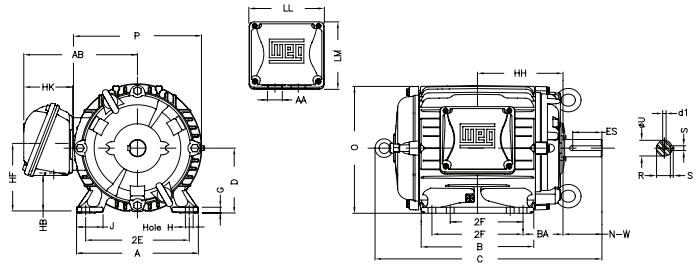

Frame 182 to 213/5

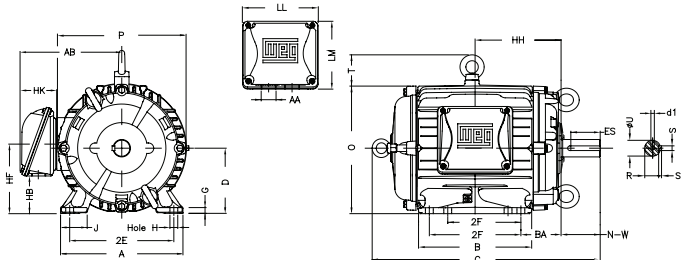

Frames 254 to 326

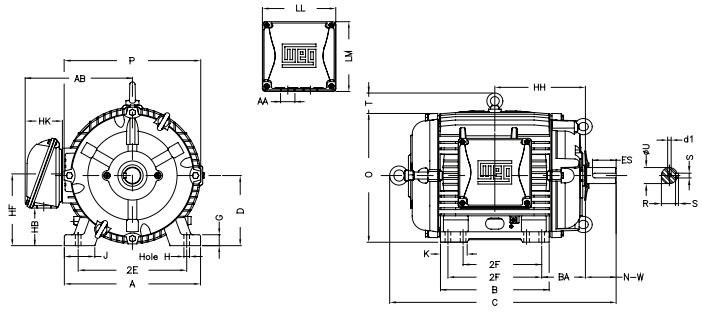

Frames 364 to 445/7

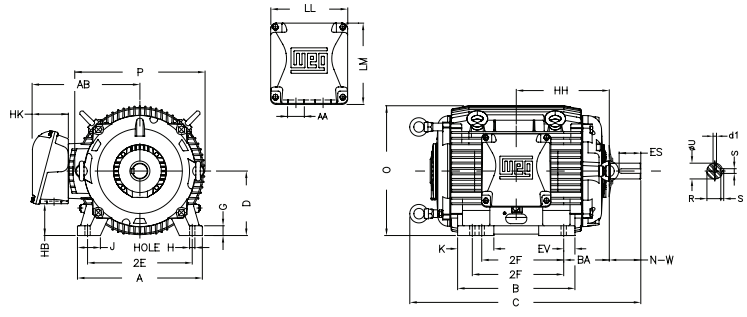

Frame 447/9 to 588/9

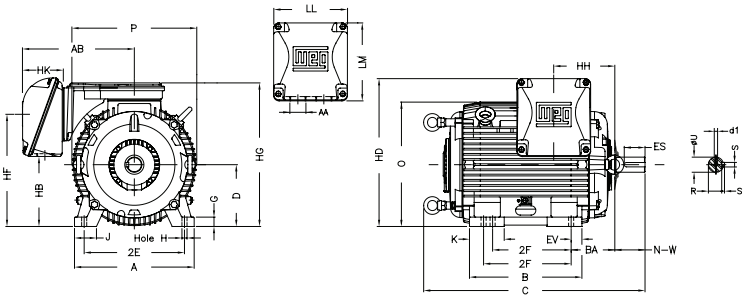

Data subject to change without notice.

All dimensions in inches

Frame	2E	2F	BA	A	B	C	D	O	P	AB	Hole H	U	N-W	S	R	ES	DEBRG	NDE BRG
B56	4.875	3.000	2.750	6.535	4.016	11.102	3.500	7.165	7.323	5.433	0.343	0.625	1.875	0.187	0.517	1.102	6203 ZZ	6202 ZZ
D56						12.283											6204 ZZ	
F56H					6.496	13.464												6203 ZZ
G56H						13.858												
F143/5T	5.5	4.00/ 5.000	2.250			14.488						0.875	2.25		0.766	1.417	6205 ZZ	
G143/5T						14.882												

Flange Dimensions

Size	AJ	AK	AH	BB	BD	BF	BF Number
FC-95	3.748	3.000	2.063	0.157	6.535	UNC 1/4"x20-2B	4
FC-149	5.874	4.500				UNC 3/8"x16-2B	

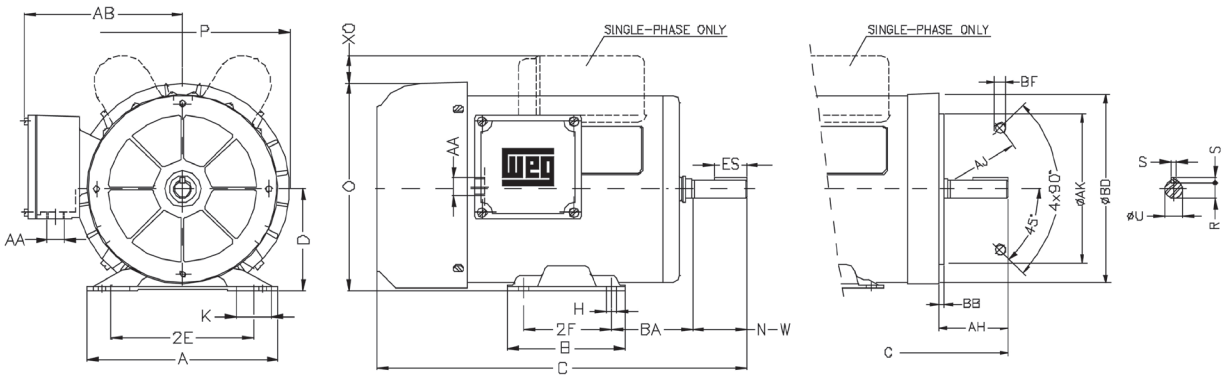

TEFC – Single Phase (Cast Iron)

Frame	2E	2F	A	AA	AB	B	BA	C	D	G	Hole H	J	K	O	P	T	Shaft end						Bearings	
																	d1	ES	N-W	R	S	U	D.E.	N.D.E.
W182/4T	7.500	4.500/ 5.500	8.661	NPT 3/4"	7.362	6.968	2.750	17.244	4.500	0.630	0.406	1.890	2.441	8.267	7.800	1.851	A 4	1.968	2.750	0.984	0.250	1.125	6206 ZZ	6206 ZZ
W213/5T	8.500	5.500/ 7.000	9.765	NPT 1"	7.953	8.875	3.500	20.984	5.250	0.830		2.000	3.343	9.610	8.820	1.890		2.480	3.375	1.203	0.313	1.375	6308 ZZ	6206 ZZ
184T	7.500	5.500	8.661	NPT 3/4"	7.835	6.968	2.750	17.050	4.500	0.799		1.890	1.968	8.267	8.740	1.851		1.968	2.750	0.984	0.250	1.125	6307 ZZ	6206 ZZ
215T	8.500	7.000	9.764	NPT 1"	9.055	8.875	3.500	19.567	5.250	0.827		2.008	2.165	9.610	10.630	3.000		2.480	3.375	1.203	0.313	1.375	6308 ZZ	6206 ZZ

Frames W182/4T to 215T

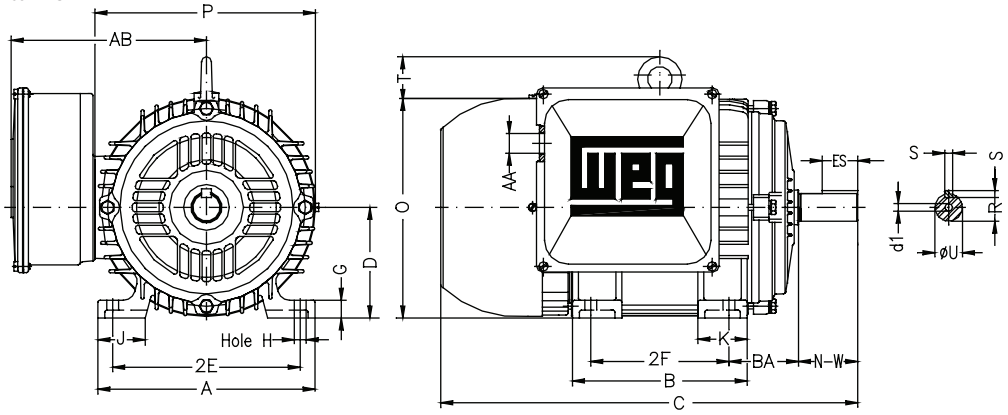

Data subject to change without notice.

Frame	2E	2F	A	AA	AB	B	BA	C	D	H	H1	O	P	XO	Shaft end					Bearings	
															ES	N-W	R	S	U	D.E.	N.D.E.
B56	4.874	3.000	6.535	NPT 1/2"	5.433	4.016	2.750	11.102	3.500	0.342	1.220	7.165	7.323	1.063	1.102	1.874	0.517	0.187	0.625	6203 ZZ	6202 ZZ
D56								12.283								1.874			0.625	6204 ZZ	
F143T				NPT 3/4"		6.496	2.250	14.488							1.417	2.250	0.766		0.875	6205 ZZ	6203 ZZ
F56H				NPT 1/2"			2.750	13.464							1.102	1.874	0.517		0.625	6204 ZZ	
G145T				NPT 3/4"			2.250	14.882							1.417	2.250	0.766		0.875	6205 ZZ	
G56H				NPT 1/2"			2.750	13.858							1.102	1.874	0.517		0.625	6204 ZZ	

Frames B56 to G56H

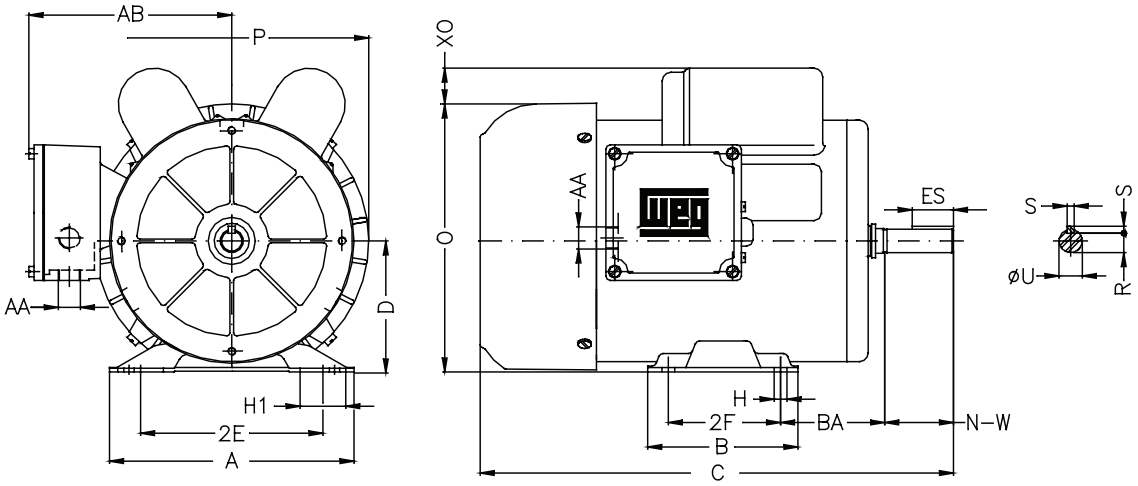

TEFC – Farm Duty Motors – Auger Drive

FRAME	AJ	AK	BD	BF		BB	AH	C	P	KEYWAY			SHAFT EXTENSION		AB	AA	BEARINGS	
				NUMBER	HOLE					S	R	ES	N-W	U			D.E.	O.D.E.
B56N	7,250	6,374	6,614	2	0.374	0.138	2,059	12,362	7,323	0.187	0.517	1,417	1,874	0.625	5,433	2 x NPT1/2"	6203-ZZ	6203-ZZ
D56N								13,543										
F56HN								14,724										

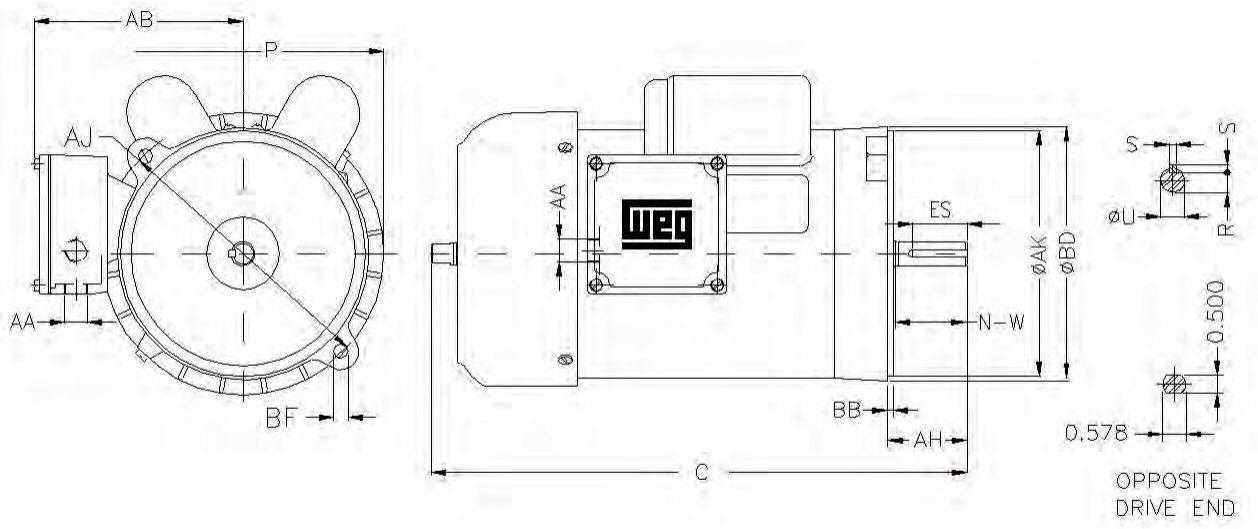

ODP - Single Phase - Fractional Frames

All dimensions in inches

Frame	2E	2F	BA	A	B	C	D	O	P	Hole H	U	N-W	ES	S	R	DE BRG	NDE BRG
B48	4.236	2.748	2.500	6.142	3.543	9.409	3.000	5.906	5.709	0.343	0.500	1.500	1.260	-	0.453	6203ZZ	6202ZZ
C48						10.197											
56	4.874	3.000	2.750	6.535	4.016	9.646	3.500	6.378			0.625	1.875	1.102	0.187	0.517		
C56						10.551											
B56						11.102		6.772	6.496							6204ZZ	6203ZZ
D56						12.283											
F56H					6.496	13.464											
G56H						13.858											

Flange Dimensions

Frame	Size	AJ	AK	AH	BB	BD	BF	BF Number
48	FC-95	3.748	3.000	1.689	0.157	5.748	UNC 1/4"x20-2B	4
48	FC-149	5.874	4.500	1.689	0.157	5.748	UNC 3/8"x16-2B	4
56	FC-95	3.748	3.000	2.063	0.157	6.535	UNC 1/4"x20-2B	4
56	FC-149	5.874	4.500	2.063	0.157	6.535	UNC 3/8"x16-2B	4

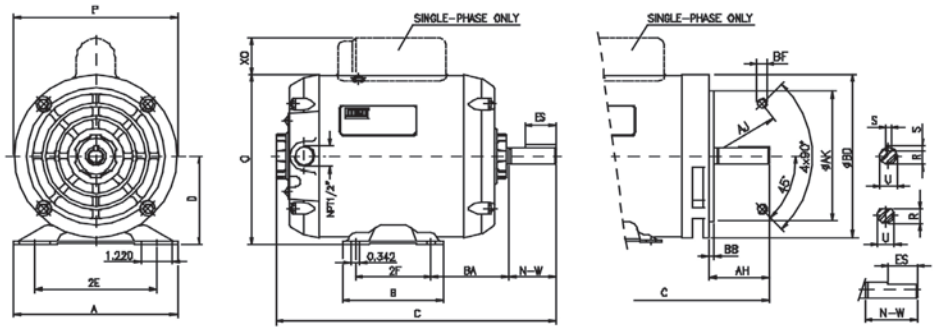

ODP - Single Phase - Integral Frames

All dimensions in inches

Frame	2E	2F	BA	A	B	C	D	G	J	K	O	P
182T	7.500	4.500	2.750	8.661	6.378	14.448	4.500	0.472	1.968	1.850	8.890	8.858
184T	7.500	5.500	2.750	8.661	7.165	14.870	4.500	0.472	1.968	1.850	8.890	8.858

Frame	AB	Hole H	U	N-W	S	R	ES	d1	DE BRG	NDE BRG
182T	8.346	0.406	1.125	2.750	0.250	0.984	1.969	A 4	6206 ZZ	6205 ZZ
184T	8.346	0.406	1.125	2.750	0.250	0.984	1.968	A 4	6206 ZZ	6205 ZZ

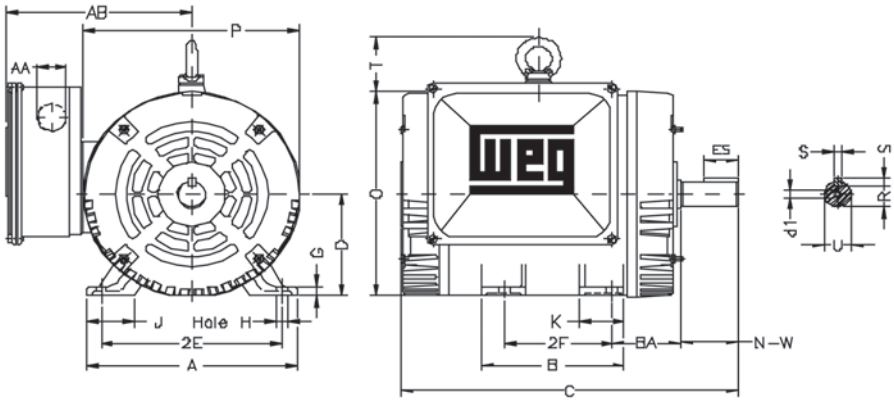

ODP – Compressor Duty – Single phase

Frame	2E	2F	2F'	A	AA	B	BA	C	D	H	H1	O	P	XO	Shaft end					Bearings	
															ES	N-W	R	S	U	D.E.	N.D.E.
C56	4.874	3.000	*	6.535	NPT 1/2"	4.016	2.748	10.551	3.500	0.342	1.220	6.378	5.709	1.497	1.102	1.874	0.517	0.187	0.625	6203ZZ	6202ZZ
B56								11.102				6.771	6.496							6204ZZ	6203ZZ
D56								12.283				6.772		1.889							
F56H			5.000			6.496		13.464						1.298							
G56H								13.858													

* Not applicable.

Frames C56 to D56

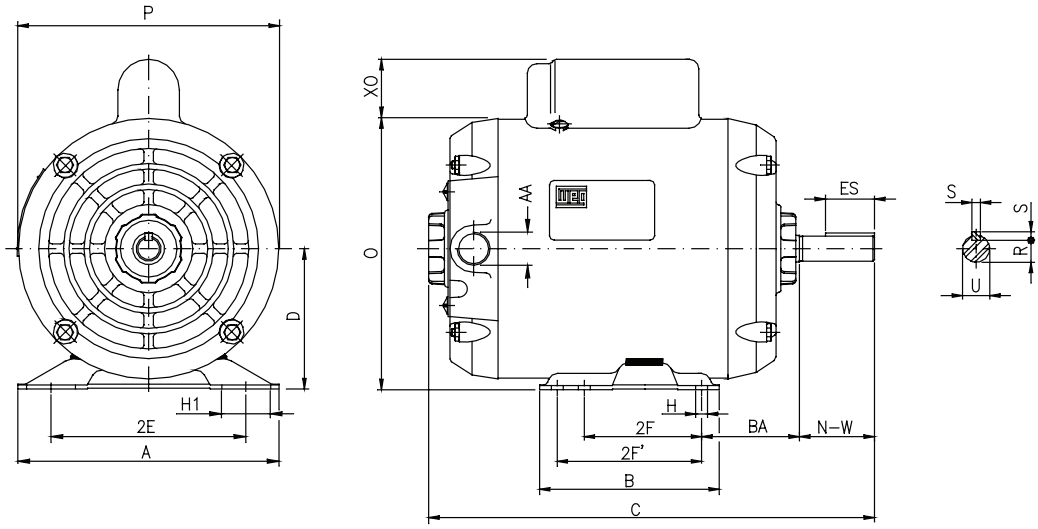

Frames F56H to G56H

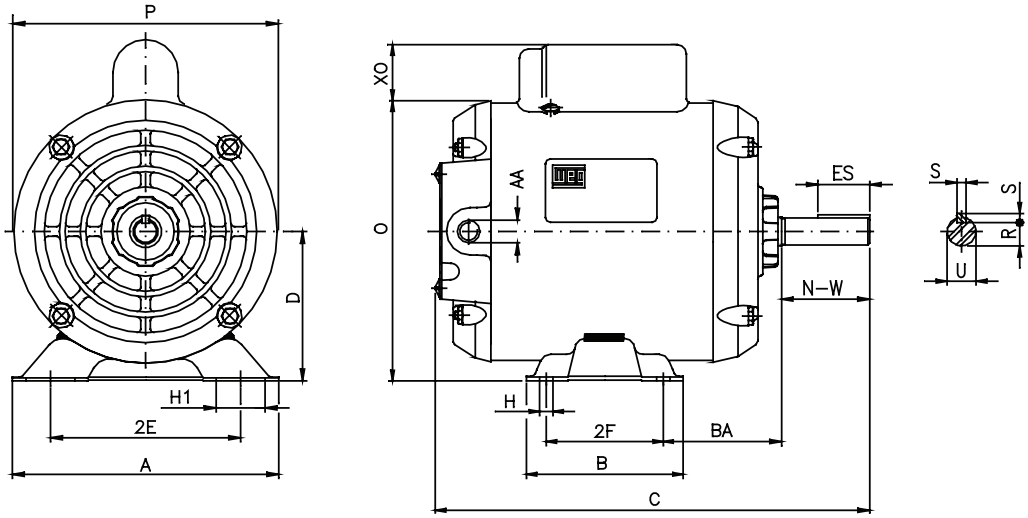

Data subject to change without notice.

Frame	2E	2F	A	AA	B	BA	C	D	H	H1	J	O	P	Shaft end				
														ES	N-W	R	S	U
C56	4.874	3.000	6.535	NPT 1/2"	4.016	2.750	10.433	3.500	0.342	1.220	1.220	6.378	5.709	1.102	1.874	0.517	0.187	0.625

Frame C56

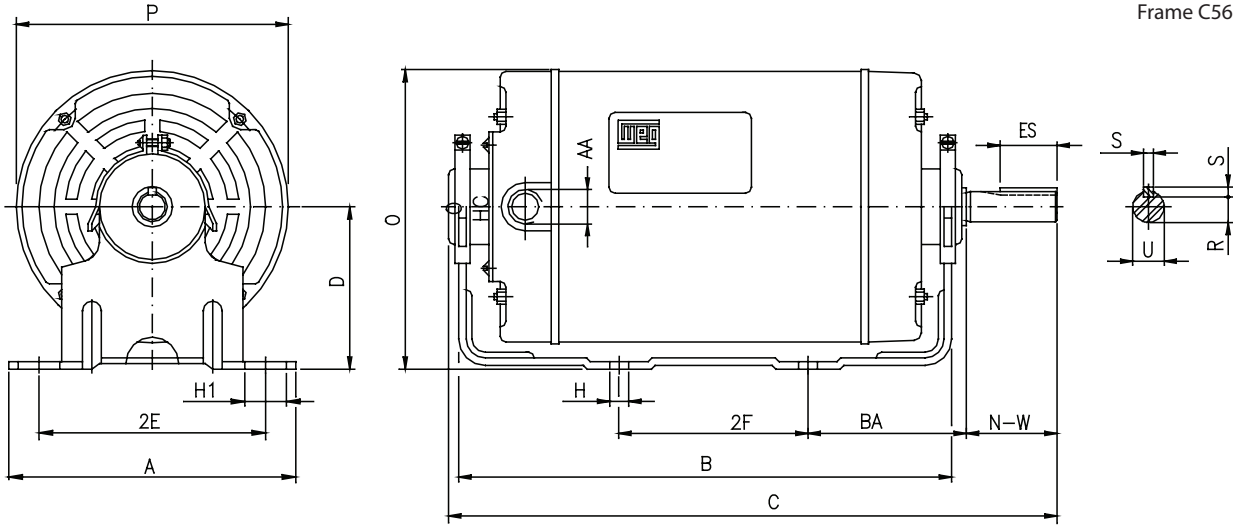

TENV – Vector Duty

NEMA FRAME	2E	2F	H	BA	A	B	D	G	J	K	O	P	T
143T	5.500	4.000	0.344	2.250	6.457	5.157	3.500	0.354	1.437	-	7.122	7.047	---
145T		5.000				6.142							
182T	7.500	4.500	0.406	2.750	8.661	5.945	4.500	0.394	1.594		9.343	8.740	1.772
184T		5.500				6.969							
213T	8.500	5.500		3.500	9.764	7.362	5.250	0.827	1.988		10.841	10.669	
215T		7.000				8.858							
254T	10.000	8.250	0.531	4.250	12.126	10.000	6.250		2.539	2.559	12.598	12.953	2.087
254T		10.000				11.732							

All dimensions in inches

NEMA FRAME	KEYWAY			DE SHAFT			DE FLANGE							
	S	R	ES	N-W	U	d1	TYPE	AJ	AK	BD	BF	BB	BC	AH
143T 145T	0.187	0.765	1.575	2.250	0.875	A4	FC-149	5.875	4.500	6.500	UNC 3/8"-16	0.156	0.125	2.125
182T 184T	0.250	0.984	1.969	2.750	1.125		FC-184	7.250	8.500	8.875	UNC 1/2"-13	0.250		2.625
213T 215T	0.313	1.203	2.480	3.375	1.375								0.250	3.125
254T 254T	0.375	1.406	2.756	4.000	1.625									3.750

All dimensions in inches

NEMA FRAME	NDE FLANGE						BEARINGS	
	TYPE	FAJ	FAK	FBD	FBF	FBB	D.E.	N.D.E
143T	FC-149	5.875	4.500	6.496	UNC 3/8"-16	0.156	6205-ZZ	6205-ZZ
145T				6.693			6207-ZZ	6207-ZZ
							6308-ZZ	6308-ZZ
182T 184T 213T 215T 254T 254T	FC-184	7.250	8.500	8.875	UNC 1/2"-13	0.250	6309-C3	6309-C3

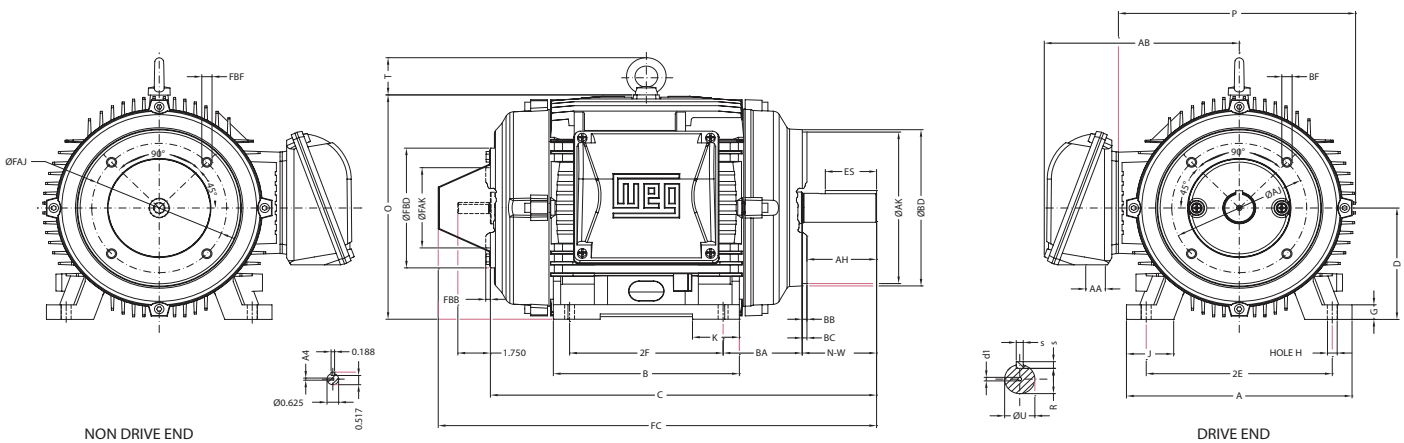

Data subject to change without notice.

ODP – Pool & Spa Motors
C FLANGE

FRAME	AJ	AK	BD	BF		AH	BB	C	O	P	XO	AA	BEARINGS	
				NUMBER	TAP SIZE								D.E.	O.D.E.
K56J	5,874	4,500	5,748	4	UNC 3/8"x16	2,563	0.157	13,898	6,161	5,748	1,063	NPT 1/2"	6203-2RS	6203-2RS
L56J								14,488						
M56J								15,079						

ODP – Pool & Spa Motors
SQUARE FLANGE

FRAME	AJ	AK	BD	BF		AH	BB	C	O	P	XO	AA	BEARINGS	
				NUMBER	HOLE								D.E.	O.D.E.
K48Y	7,126	*	6,496	4	0.394	0.901	*	12,913	6,161	6,496	1,063	NPT 1/2"	6203-2RS	6203-2RS
L48Y								13,504						
M48Y								14,094						

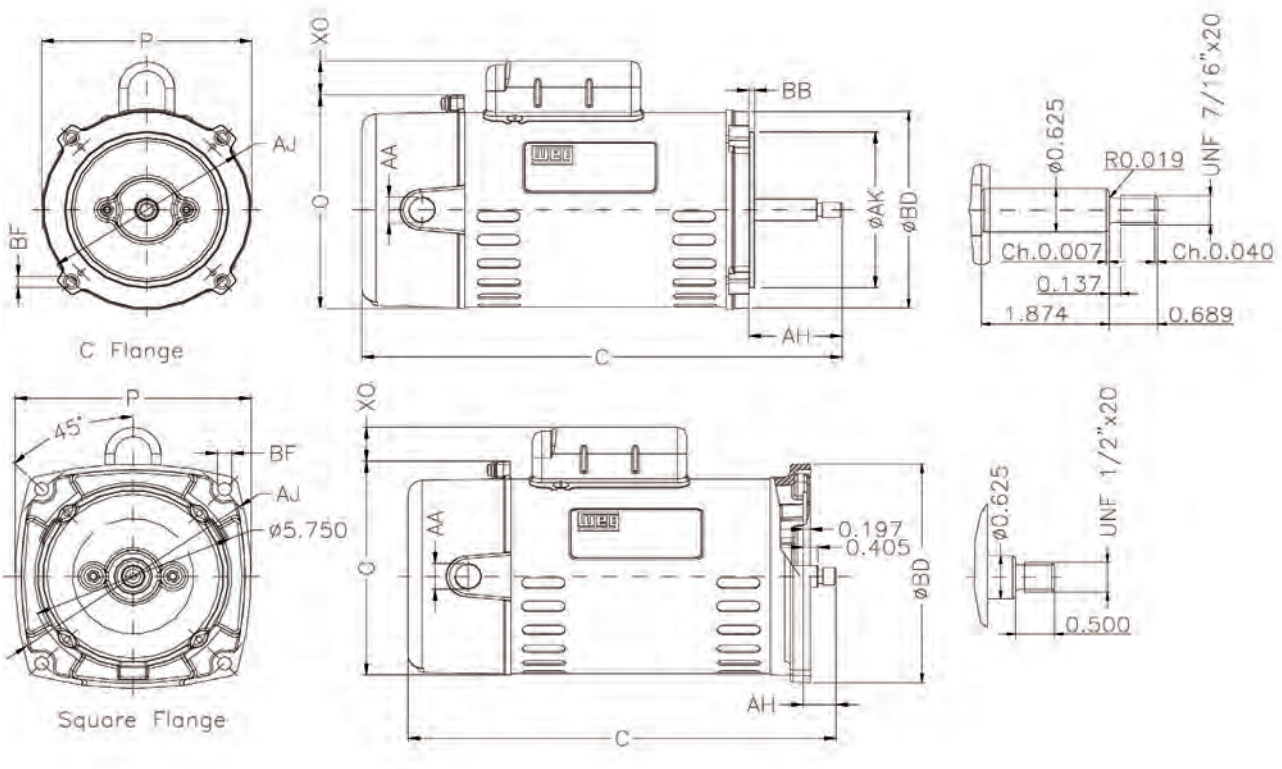

Air Handling Motors – Commercial HVAC Motors

ODP - Single Phase - Evaporative Cooler

COMMERCIAL HVAC MOTORS	C	CR	KEY WAY			SHAFTEXTENSION		BEARINGS	
			ODP - Single Phase - Evaporative Cooler	R	ES	N-W	U	D.E.	N.D.E.
56 (1/3HP)	9.530	7.440		0.453	1.500	1.688	0.500	6201-ZZ	6201-ZZ
56 (1/2HP)									
56 (3/4HP)									
56 (1HP)	10.960	8.440	0.187	0.517	1.817	1.937	0.625	6203-ZZ	6201-ZZ

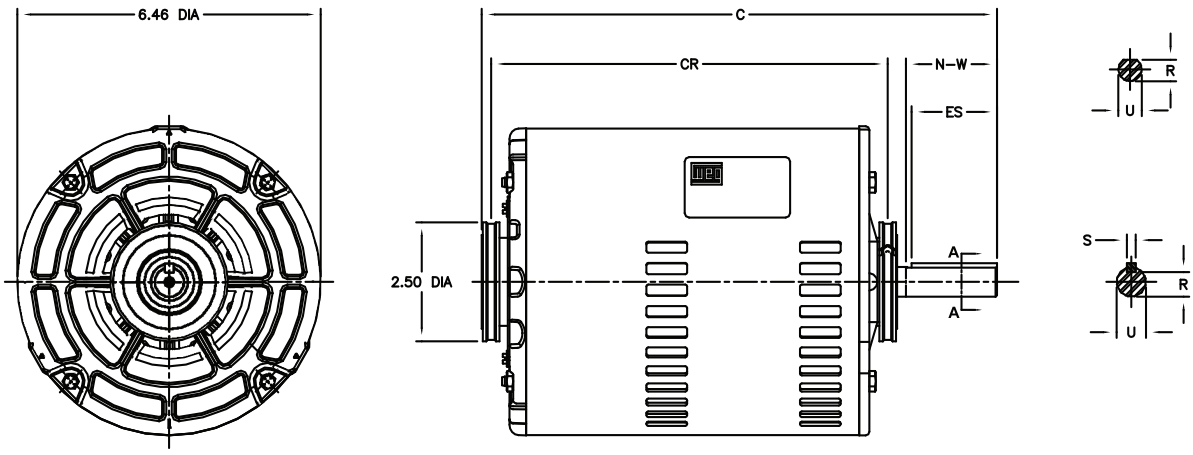

Data subject to change without notice.

All dimensions in inches

IEC FRAMES	2E	J	A	P	AB	2F	FK	FK1	B	FBA	D	O	C	FC	AA	X	BEARINGS	
																	D.E.	O.D.E.
80S-MS						10.236			12.008				18.543	22.440				
80M-MS	7.480	1.378	8.858	7.480	5.984	12.205	1.772	1.772	13.976	3.150	3.150	6.063	20.512	24.409	NPT3/4"	4.724	6307-ZZ	6207-ZZ
80L-MS						14.173			15.949				22.480	26.377				
90L-MS	6.299	2.500	7.756	8.189	6.575	20.079	2.441	4.960	21.378	3.150	3.543	6.968	26.476	29.842	NPT1"	6.299	6308-ZZ	6208-ZZ

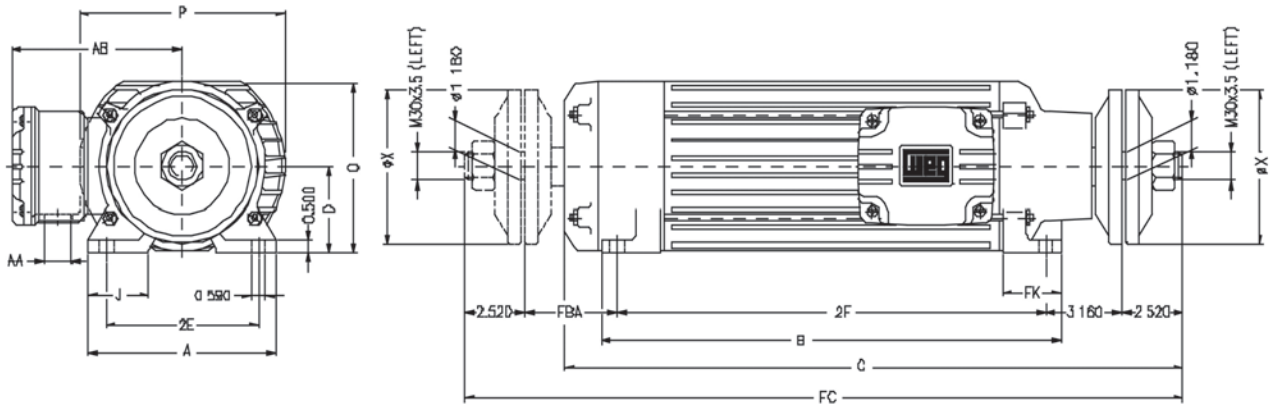

Wash Down Duty – Shark™ – Stainless Steel

All dimensions in inches

Frame	Mounting									
	E	F	BA	A	B	C	D	G	H	O
56	2.44	1.5	2.75	6.4	6.4	11.6	3.5	0.08	0.34	7
56H	2.44	2.5	2.75	6.4	6.4	13.6	3.5	0.08	0.34	7
143T	2.75	2	2.75	6.4	6.4	12.6	3.5	0.08	0.34	7
145T	2.75	2.5	2.75	6.4	6.4	13.6	3.5	0.08	0.34	7
182T	3.75	2.25	2.75	9	6.4	16	4.5	0.16	0.41	9.2
184T	3.75	2.75	2.75	9	7.4	17	4.5	0.16	0.41	9.2
213T	4.25	2.75	3.5	10.5	8.5	22	5.25	0.16	0.41	10.4
215T	4.25	3.5	3.5	10.5	8.5	22	5.25	0.16	0.41	10.4

Frame					Shaft Extension			Bearings	
	P	R	S	AB	N-W	U	V	D.E.	N.D.E.
56	7	0.517	0.188	6.2	1.88	0.625	2	6205	6205
56H	7	0.517	0.188	6.2	1.88	0.625	2	6205	6205
143T	7	0.771	0.188	6.2	2.25	0.875	2	6205	6205
145T	7	0.771	0.188	6.2	2.25	0.875	2	6205	6205
182T	8.7	0.986	0.25	7.2	2.75	1.125	2.5	6306	6306
184T	8.7	0.986	0.25	7.2	2.75	1.125	2.5	6306	6306
213T	10.4	1.201	0.312	8.27	3.38	1.375	3.12	6208	6208
215T	10.4	1.201	0.312	8.27	3.38	1.375	3.12	6208	6208

Frame	AJ	AK	BA	MIN	BC	MAX	Number	Screw	Depth	U	AH	keyseal		
				BB		BD	of Holes		of Hole			R	ES	S
56C	5.875	4.5	2.75	0.16	-0.19	6.5	4	3/8/16	-	0.625	2.06	0.517	1.41	0.188
143/5TC	5.875	4.5	2.75	0.16	0.12	6.5	4	3/8/16	0.56	0.875	2.12	0.771	1.41	0.188
182/4TC	7.25	8.5	3.5	0.25	0.12	9	4	1/2/13	0.75	1.125	2.62	0.986	1.78	0.25
213/5TC	7.25	8.5	4.25	0.25	0.25	9	4	1/2/13	0.75	1.375	3.12	1.201	2.41	0.312

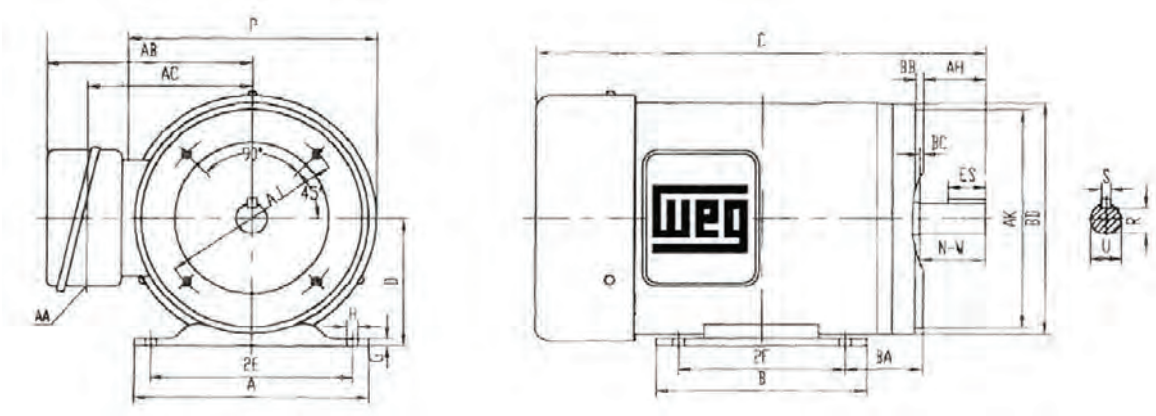

Data subject to change without notice.

All dimensions in inches

Frame	2-Pole Only	2E	2F	J	A	P	AB	K	B	BA	U	d1	N-W	ES	S	R	D
404/5T		15.984	12.244/ 13.740	3.937	19.921	19.134	18.386	5.669	18.386	6.625	2.875	DUNC3/4"-10	7.250	5.512	0.750	2.449	10.000
404/5TS	YES										2.125		4.250	2.756	0.500	1.842	
											2.125					1.842	
444/5T		18.000	14.500/ 16.500		21.929	23.583	18.386	5.866	20.315	7.500	3.375		8.500	7.087	0.875	2.880	11.000
444/5TS	YES										2.375		4.750	3.000	0.625	2.021	
											2.375					2.021	
445/7T			16.500/ 20.000				20.670		23.897		3.375		8.500	7.087	0.875	2.880	
445/7TS	YES										2.375		4.750	3.000	0.625	2.021	
											2.375					2.021	
445/7TZ											3.875		11.625	8.661	1.000	3.309	
447/9T			20.000/ 25.000					11.770	31.535		3.375		8.500	7.087	0.875	2.880	
447/9TS	YES										2.375		4.750	3.000	0.625	2.021	
											2.375					2.021	
447/9TZ											3.875		11.625	8.661	1.000	3.309	
L447/9T						25.866	23.071	8.780			3.375		8.500	7.087	0.875	2.880	
L447/9TS	YES										2.375		4.750	3.000	0.625	2.021	
											2.375					2.021	
504/5		20.000	16.000/ 18.000	4.724	24.724		20.788	7.228	24.449	8.500	3.625		10.630	8.661	0.875	3.134	12.500
504/5S	YES										2.375		4.750	3.000	0.625	2.021	
											2.375					2.021	
504/5Z											3.875		11.625	8.661	1.000	3.309	
586/T		23.000	22.000/ 25.000	5.512	29.528	28.977	23.977	9.055	29.921	10.000	3.875	DUNC 7/8"-9				3.312	14.500
586/7S	YES										2.375	DUNC3/4"-10	4.750	3.000	0.625	2.021	
											2.375					2.021	
586/7Z											4.375	DUNC 7/8"-9	11.625	8.661	1.000	3.816	

continued on next page

Frames 404/5T to 445T

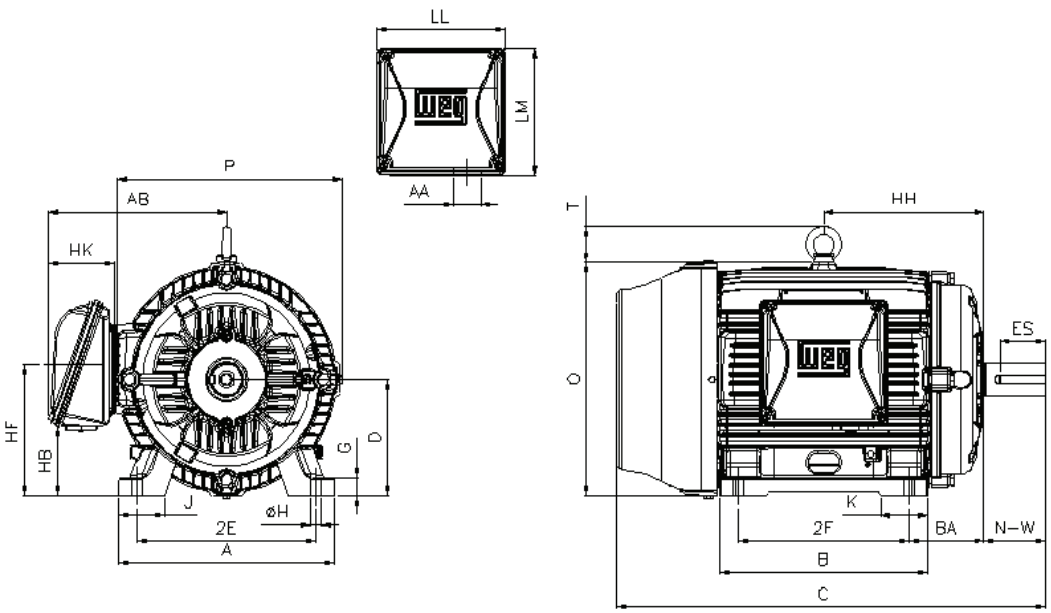

W22 – Crusher Duty continued

All dimensions in inches

Frame	2-Pole Only	G	HB	O	HD	HF	HG	HH	HK	Hole H	C	AA	LL	LM	DE BRG	NDE BRG
404/5T		1.811	5.040	19.566	23.110	10.000	-	14.213	6.378	0.810	39.730	NPT 3"	9.646	10.119	NU-316 C3	6314 C3
404/5TS	YES						-				36.732				NU-314 C3	
							-								NU-316 C3	
444/5T		1.630	5.394	22.795	27.362	11.000	-	15.748	5.787		44.950	2x NPT 3"	11.811	11.890	NU-319 C3	6316 C3
444/5TS	YES						-				41.200				NU-314 C3	6314 C3
							-								NU-319 C3	6316 C3
445/7T		1.654	12.598		30.173	20.724	26.850	11.803	6.968		48.701		14.646	15.040		
445/7TS	YES										44.951				NU-314 C3	6314 C3
															NU-319 C3	6316 C3
445/7TZ											51.826				NU-322 C3	
447/9T		1.630									56.338				NU-322 C3	6319 C3
447/9TS	YES										52.588				NU-314 C3	6314 C3
															NU-322 C3	6319 C3
447/9TZ											59.463				NU-322 C3	
L447/9T			11.417	23.874	38.780	20.551	28.236	11.500	8.464		57.181		15.906	17.244	NU-322 C3	6319 C3
L447/9TS	YES										53.431				NU-314 C3	6314 C3
															NU-322 C3	6319 C3
504/5		2.146	15.275	25.425	30.307	24.291	29.409	10.394	6.698	1.250	54.095		14.646	15.040	NU-319 C3	6316 C3
504/5S	YES										48.215				NU-314 C3	6314 C3
															NU-319 C3	6316 C3
504/5Z											55.090				NU-322 C3	
586/T		2.492	17.322	28.985	34.537	26.732	33.346	13.386	8.464	1.181	61.902		15.906	17.244	NU-322 C3	6319 C3
586/7S	YES										55.027				NU-314 C3	6314 C3
															NU-322 C3	6319 C3
586/7Z											61.902				NU-324 C3	

Frame 447T and up

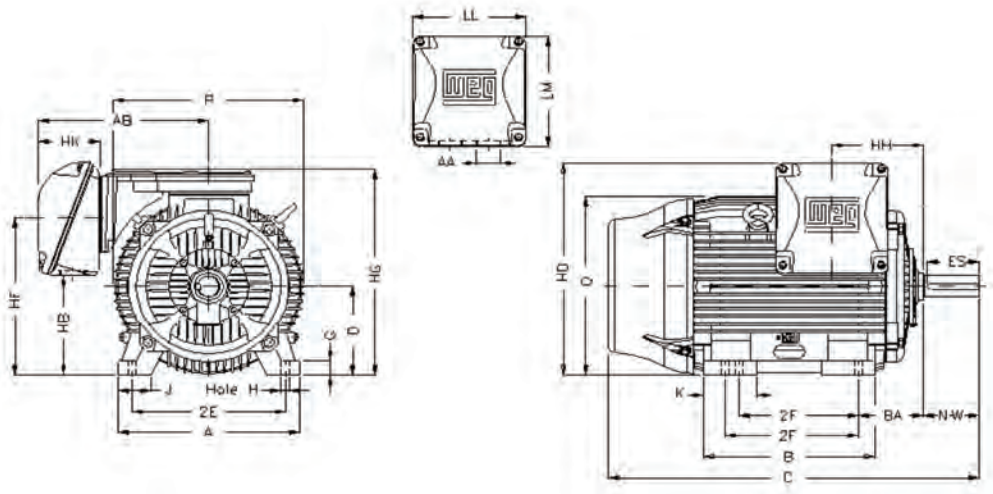

Data subject to change without notice.